This is a digital copy of a book that was preserved for generations on library shelves before it was carefully scanned by Google as part of a project to make the world's books discoverable online.

It has survived long enough for the copyright to expire and the book to enter the public domain. A public domain book is one that was never subject to copyright or whose legal copyright term has expired. Whether a book is in the public domain may vary country to country. Public domain books are our gateways to the past, representing a wealth of history, culture and knowledge that's often difficult to discover.

Marks, notations and other marginalia present in the original volume will appear in this file - a reminder of this book's long journey from the publisher to a library and finally to you.

Usage guidelines

Google is proud to partner with libraries to digitize public domain materials and make them widely accessible. Public domain books belong to the public and we are merely their custodians. Nevertheless, this work is expensive, so in order to keep providing this resource, we have taken steps to prevent abuse by commercial parties, including placing technical restrictions on automated querying.

We also ask that you:

+ *Make non-commercial use of the files* We designed Google Book Search for use by individuals, and we request that you use these files for personal, non-commercial purposes.
+ *Refrain from automated querying* Do not send automated queries of any sort to Google's system: If you are conducting research on machine translation, optical character recognition or other areas where access to a large amount of text is helpful, please contact us. We encourage the use of public domain materials for these purposes and may be able to help.
+ *Maintain attribution* The Google "watermark" you see on each file is essential for informing people about this project and helping them find additional materials through Google Book Search. Please do not remove it.
+ *Keep it legal* Whatever your use, remember that you are responsible for ensuring that what you are doing is legal. Do not assume that just because we believe a book is in the public domain for users in the United States, that the work is also in the public domain for users in other countries. Whether a book is still in copyright varies from country to country, and we can't offer guidance on whether any specific use of any specific book is allowed. Please do not assume that a book's appearance in Google Book Search means it can be used in any manner anywhere in the world. Copyright infringement liability can be quite severe.

About Google Book Search

Google's mission is to organize the world's information and to make it universally accessible and useful. Google Book Search helps readers discover the world's books while helping authors and publishers reach new audiences. You can search through the full text of this book on the web at `http://books.google.com/`

Digitized by Google

PROPERTY OF THE
University of Michigan Libraries
1817
ARTES SCIENTIA VERITAS

Digitized by Google

Digitized by Google

Digitized by Google

34TH CONGRESS, 3d Session. } SENATE. { Ex. Doc. No. 53.

15781

REPORT

OF THE

COMMISSIONER OF PATENTS

FOR THE YEAR 1856.

ARTS AND MANUFACTURES,

IN THREE VOLUMES.

ILLUSTRATIONS BY M. C. GRITZNER.

VOLUME III.

WASHINGTON:
A. O. P. NICHOLSON, PRINTER.
1857.

Digitized by Google

IN THE SENATE OF THE UNITED STATES, *February* 17, 1857.

Resolved, That there be printed, in addition to the usual number, twenty-seven thousand copies of the Annual Report of the Commissioner of Patents on Arts and Manufactures for the year 1856—two thousand copies of which shall be for the use of the Commissioner of Patents, for the purposes of official distribution.

Attest:

ASBURY DICKINS, *Secretary*.

Digitized by Google

ILLUSTRATIONS.

Digitized by Google

Digitized by Google

CONTENTS.

ILLUSTRATIONS

TO PATENTS FOR INVENTIONS GRANTED DURING THE YEAR 1856.

	Page.
I.—Agriculture, including implements and operations	1
II.—Metallurgy and manufacture of metals	71
III.—Manufacture of fibrous and textile substances	123
IV.—Chemical processes, manufactures, and compounds	166
V.—Calorifics, comprising lamps, stoves, &c	181
VI.—Steam and gas engines	207
VII.—Navigation and maritime implements	232
VIII.—Mathematical, philosophical, and optical instruments	245
IX.—Civil engineering and architecture	257
X.—Land conveyance	286
XI.—Hydraulics and pneumatics	312
XII.—Lever, screw, and other mechanical power	339
XIII.—Grinding-mills and mill-gearing	346
XIV.—Lumber, including machines and tools for preparing and manufacturing	356
XV.—Stone and clay manufactures	411
XVI.—Leather, including tanning, dressing, and manufacture	438
XVII.—Household furniture, machines and implements for domestic purposes	450
XVIII.—Arts polite, fine, and ornamental	475
XIX.—Fire-arms and implements of war	511
XX.—Surgical and medical instruments	528
XXI.—Wearing apparel, including implements for manufacturing	533
XXII.—Miscellaneous	536
XXIII.—Additional improvements	548

Digitized by Google

Digitized by Google

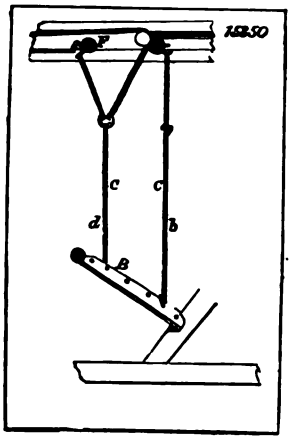

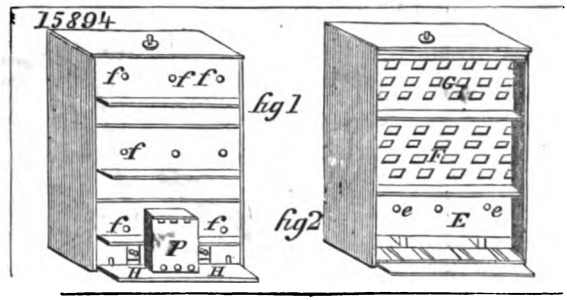

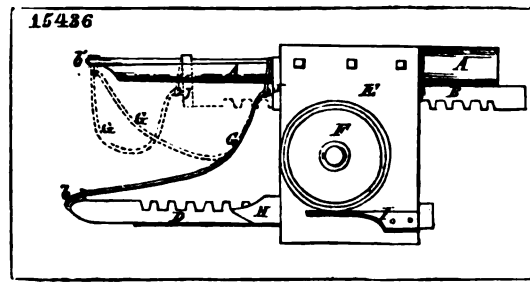

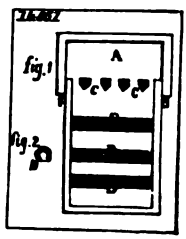

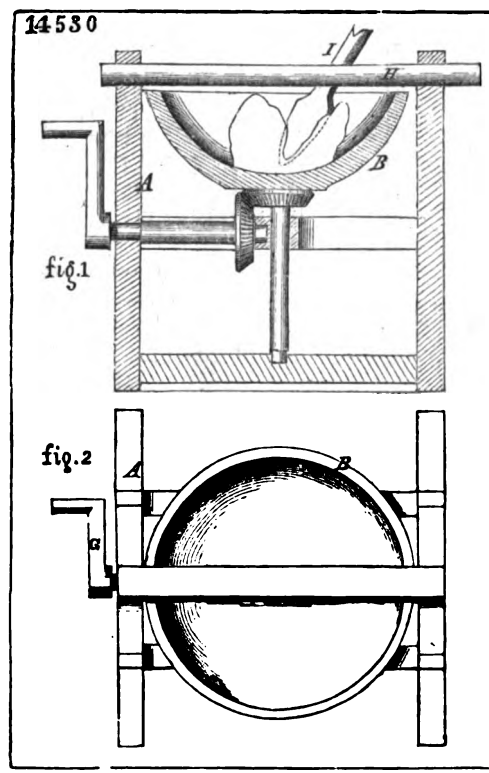

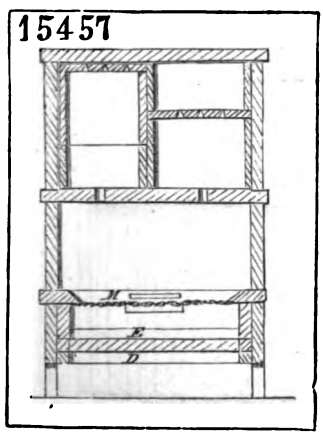

Digitized by Google

14309

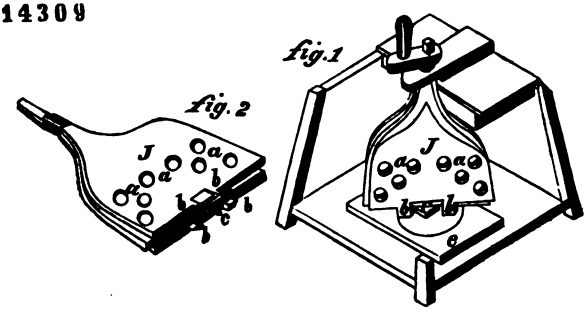

14677

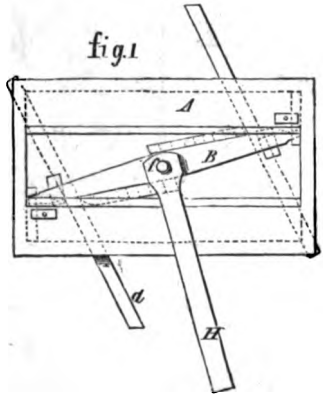

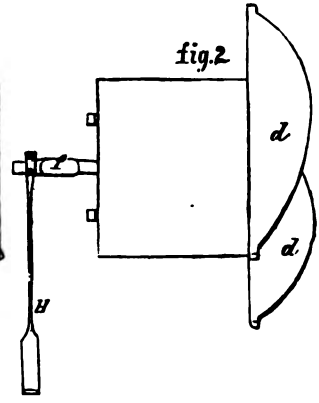

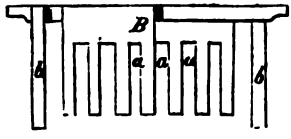

fig.3

14458

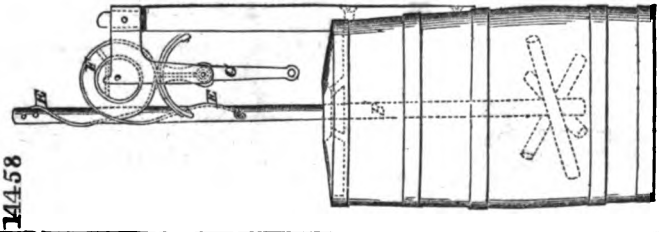

Digitized by Google

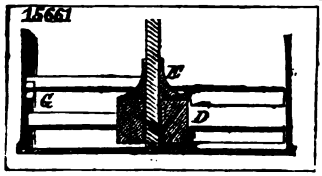

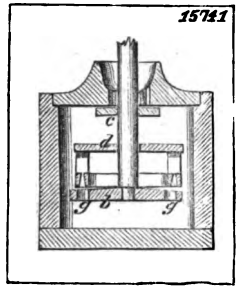

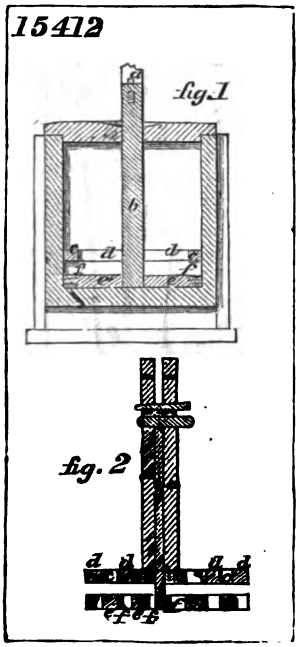

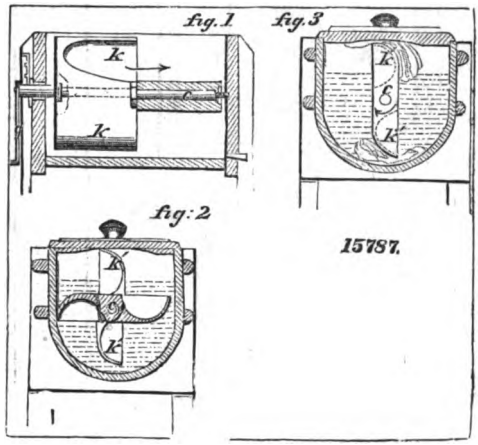

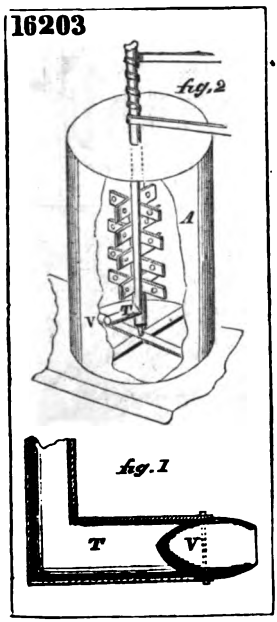

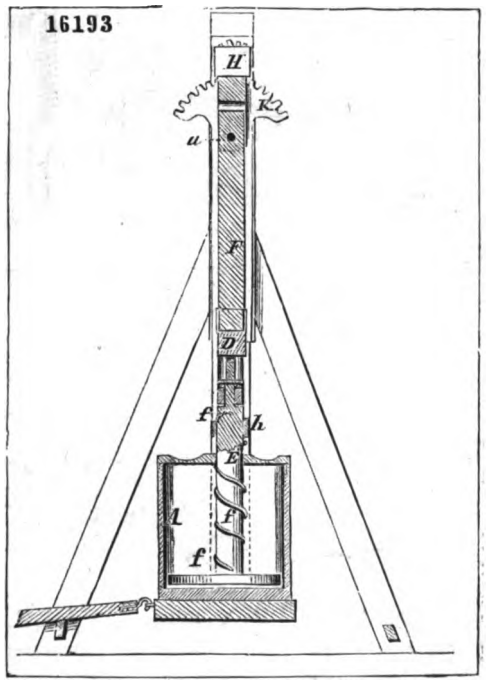

Digitized by Google

16210

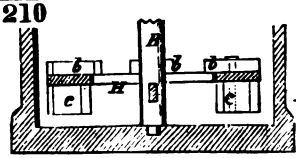

fig. 1

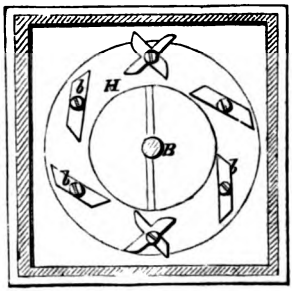

fig. 2

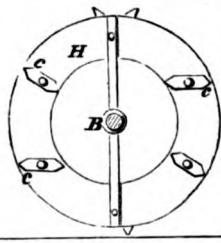

fig. 3

15743

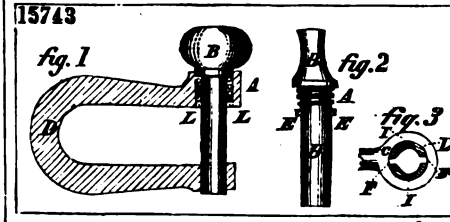

14771

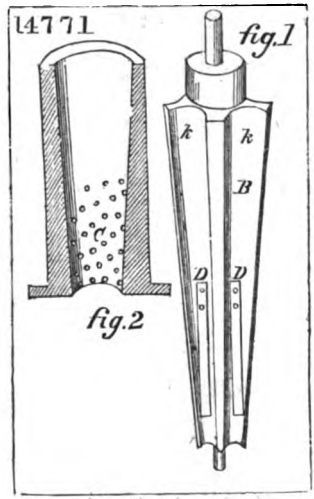

14374

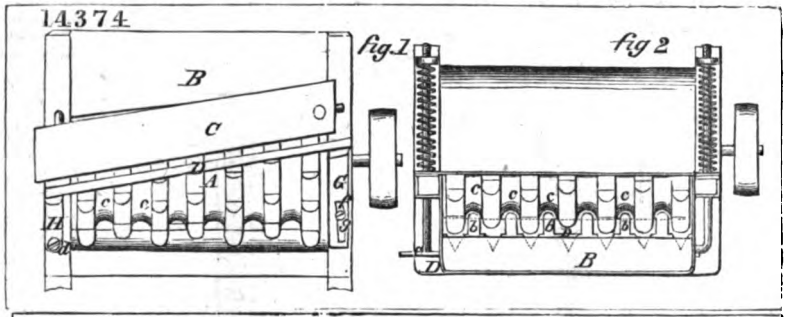

14816

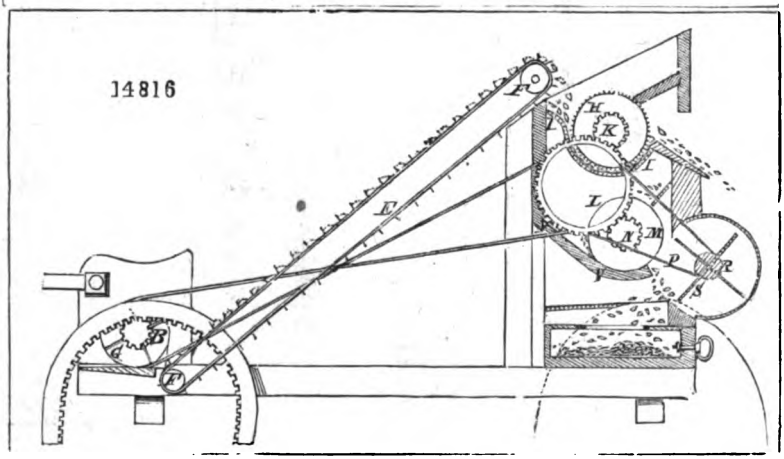

Digitized by Google

14745

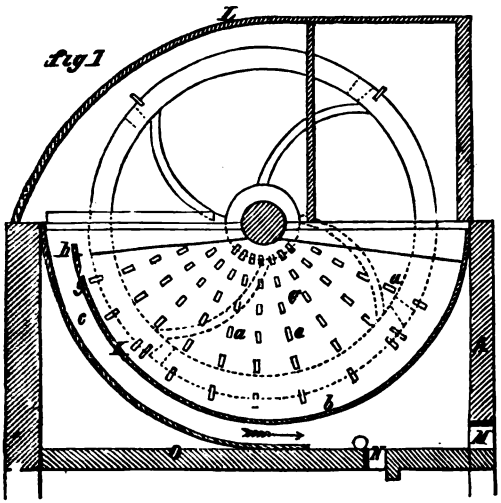

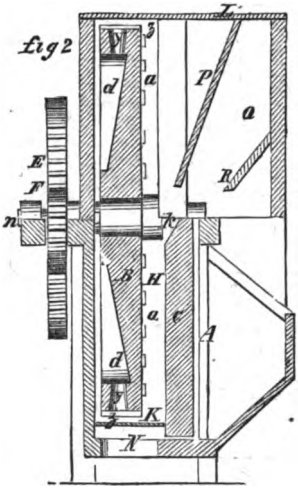

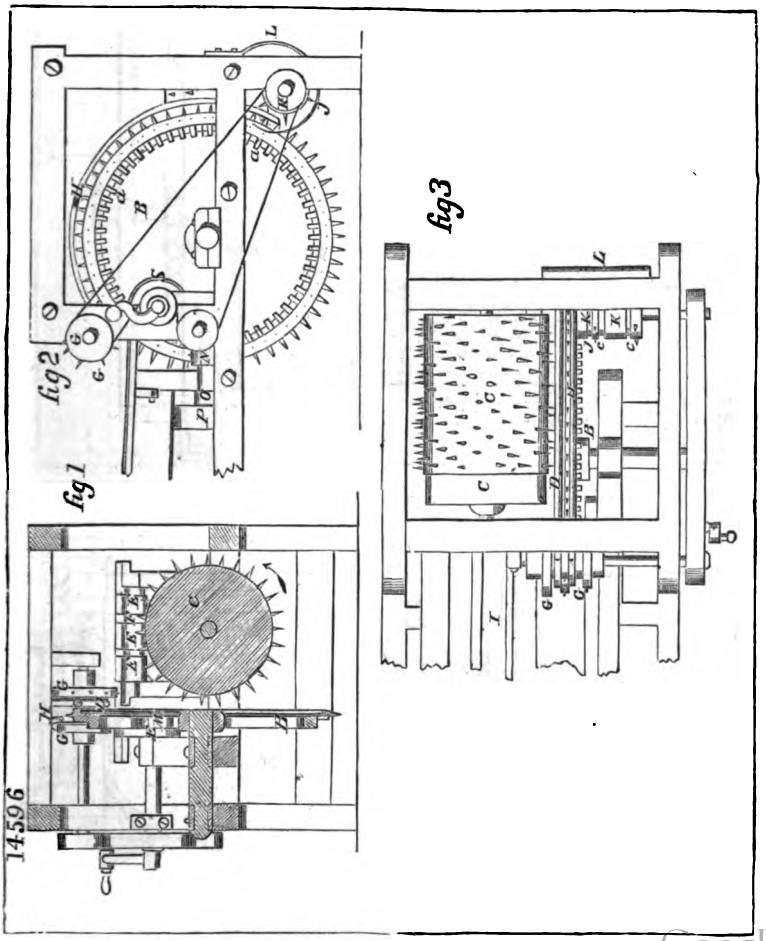

Digitized by Google

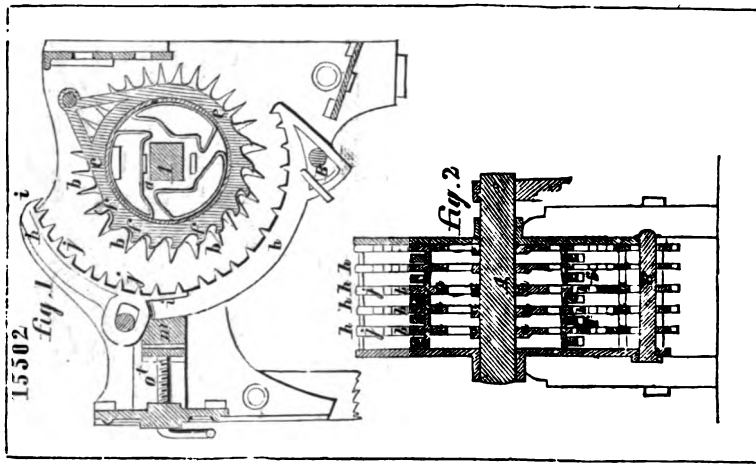

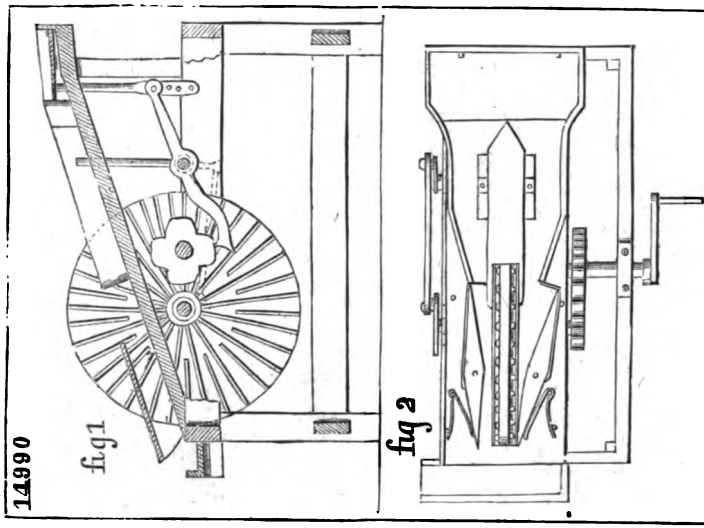

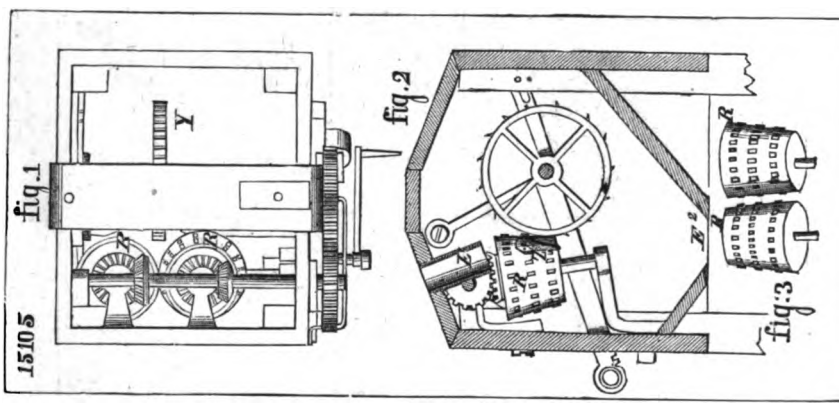

Digitized by Google

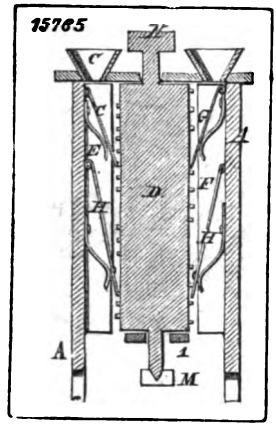

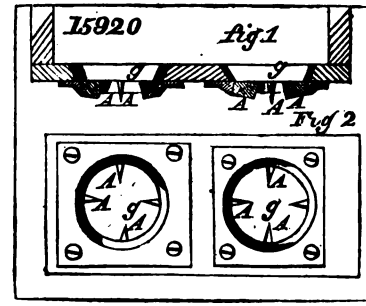

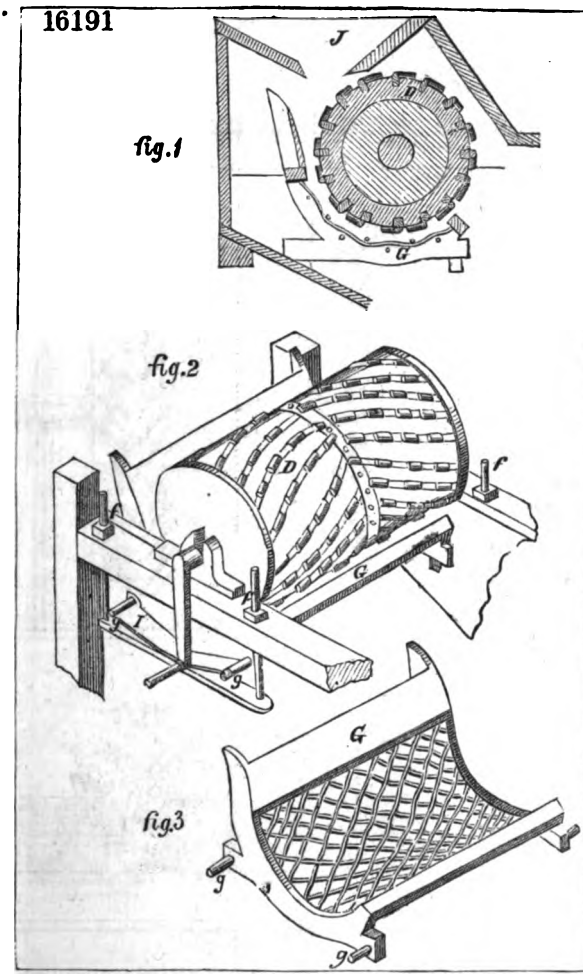

Digitized by Google

16177

fig.1

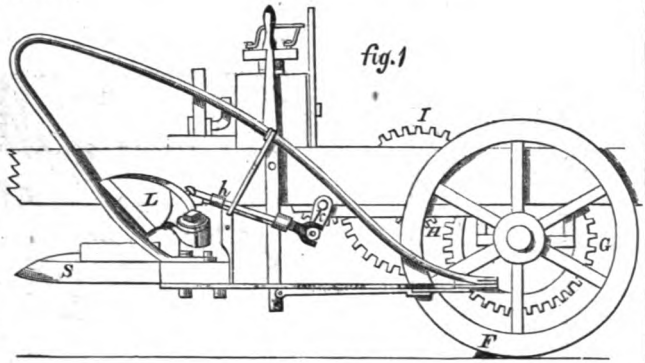

fig.2

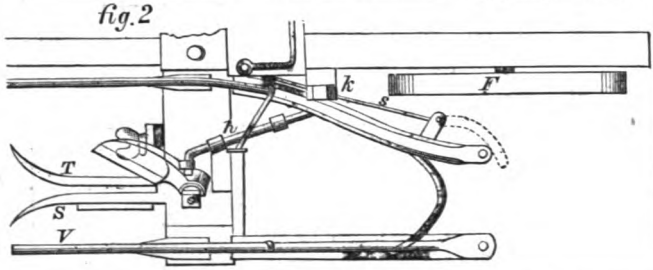

16291

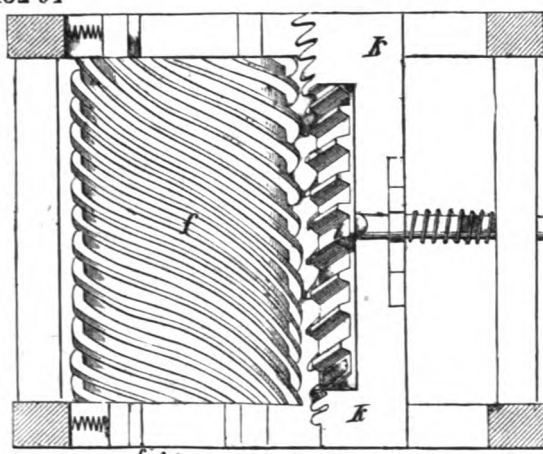

fig.1

16127

fig.1

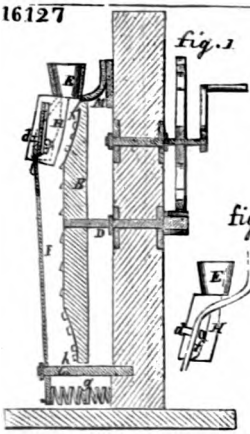

fig.2

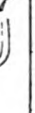

fig.2

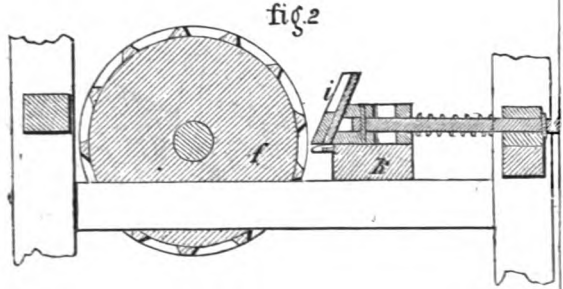

Digitized by Google

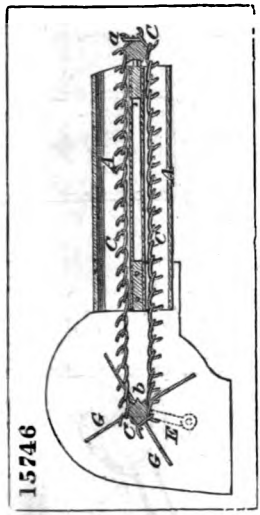

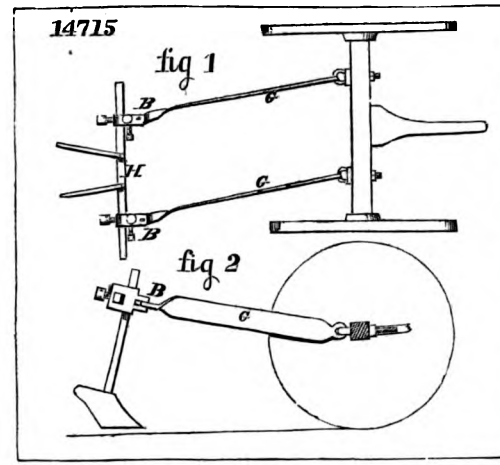

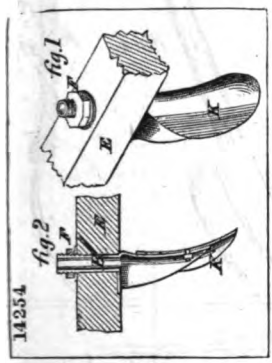

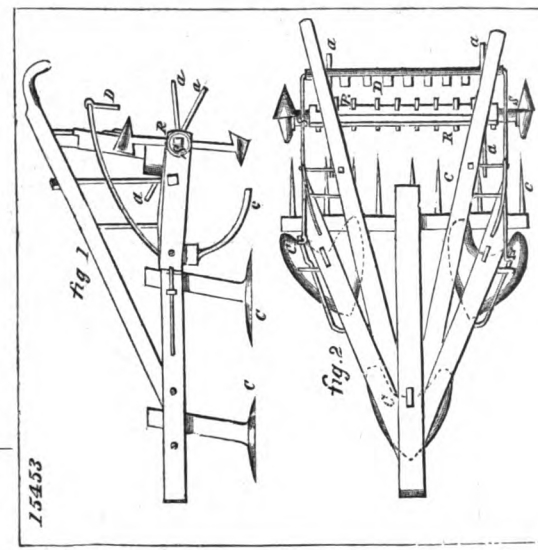

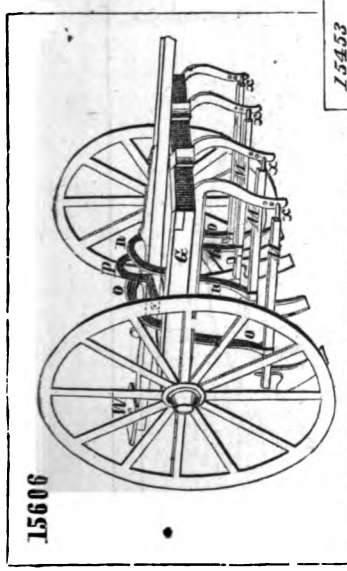

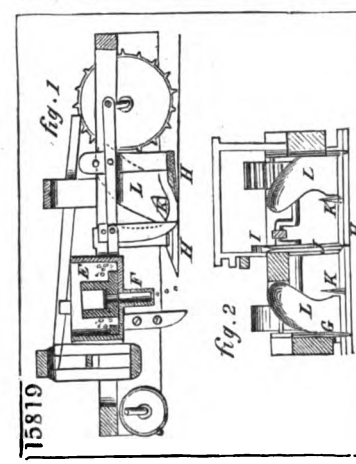

Digitized by Google

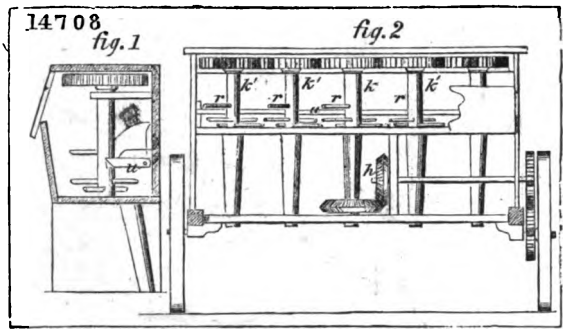

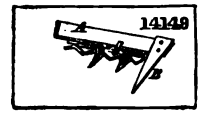

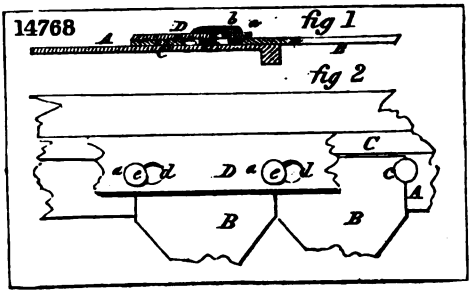

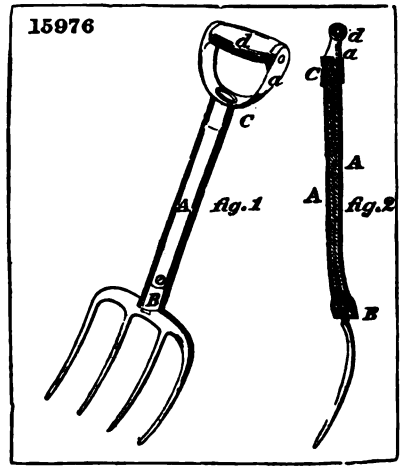

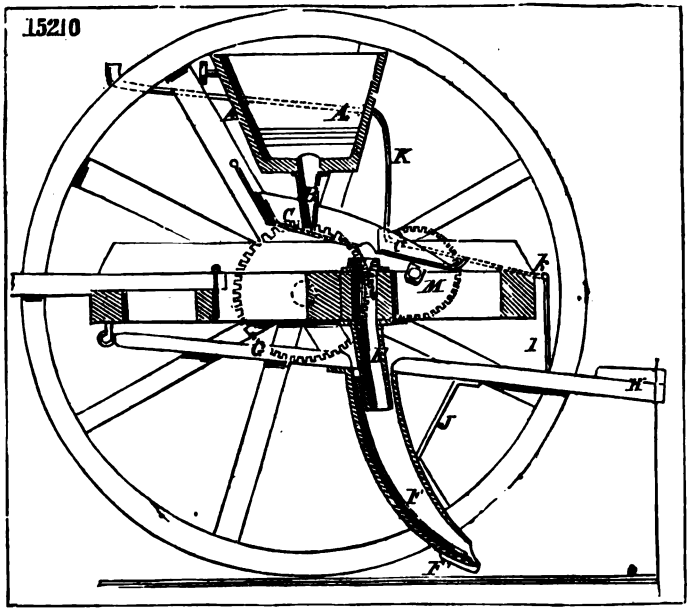

Digitized by Google

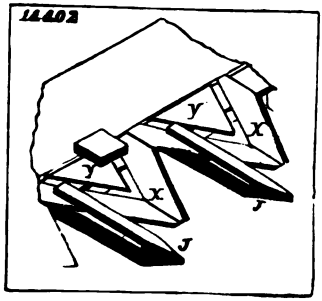

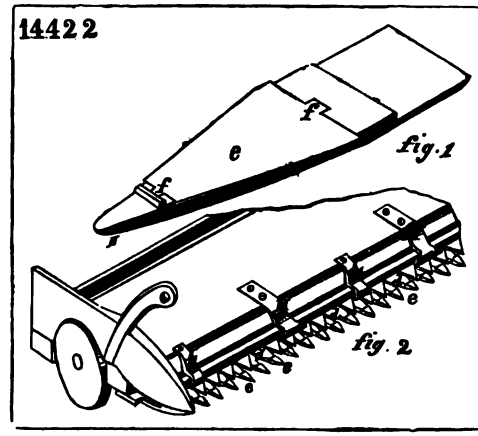

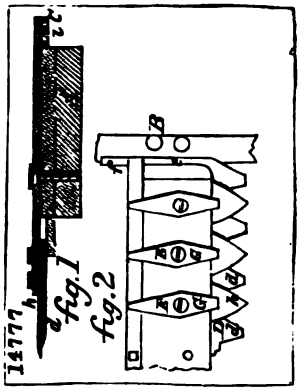

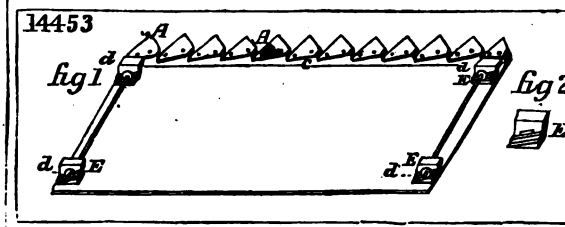

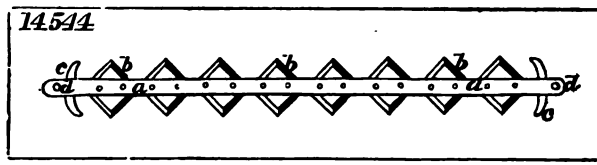

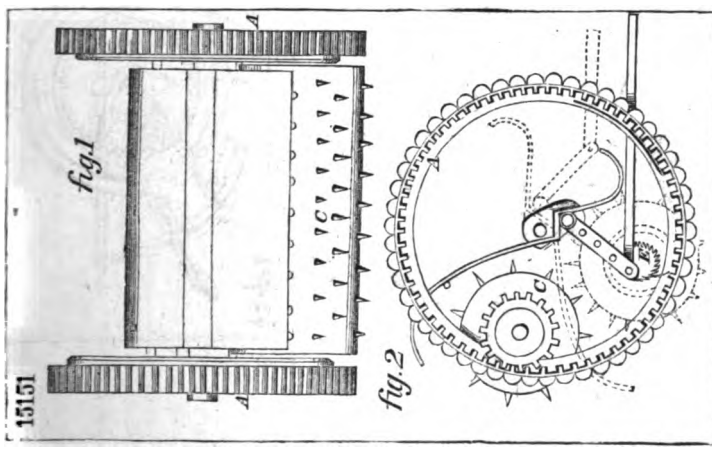

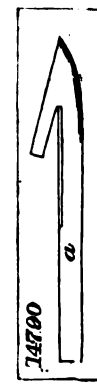

Digitized by Google

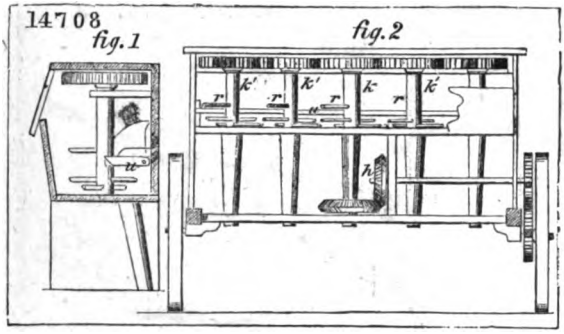

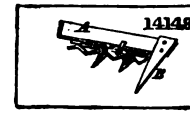

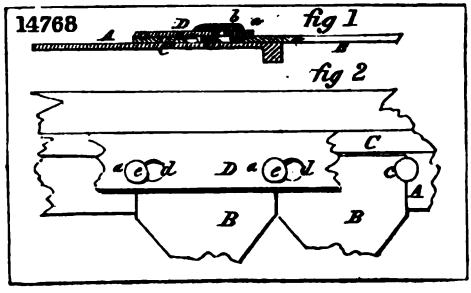

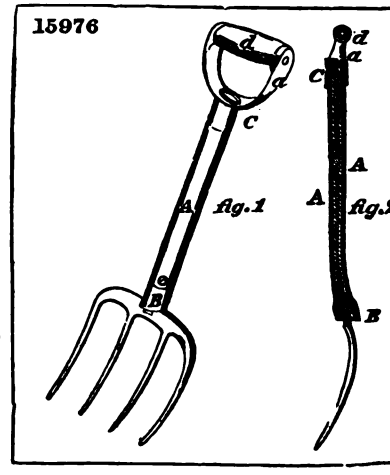

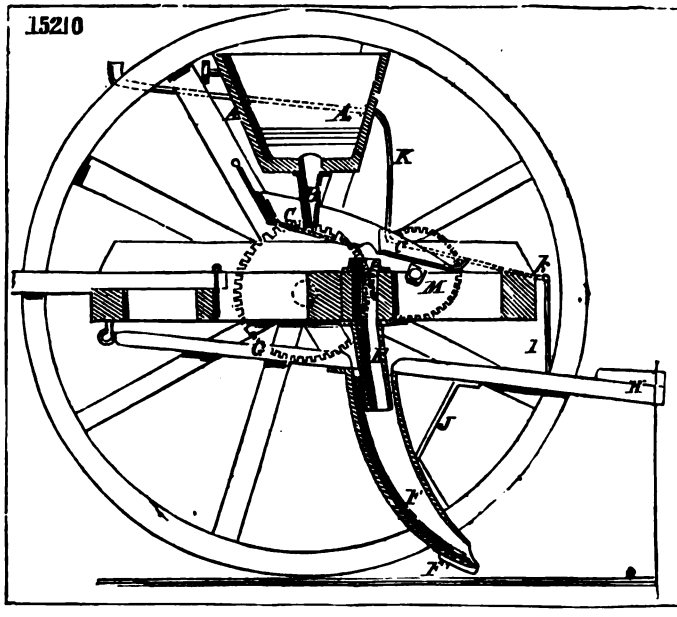

Digitized by Google

14402

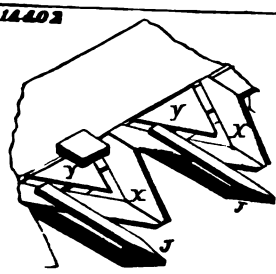

14422

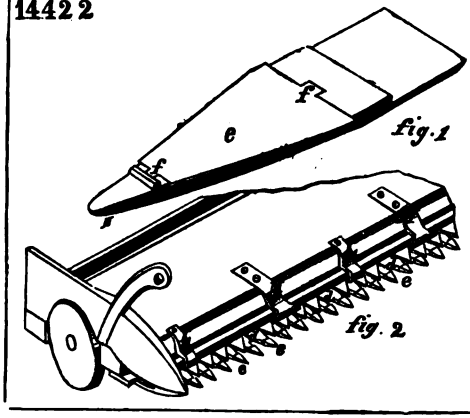

14777

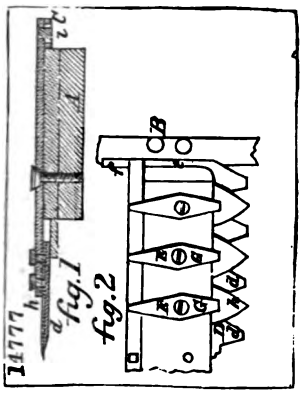

14453

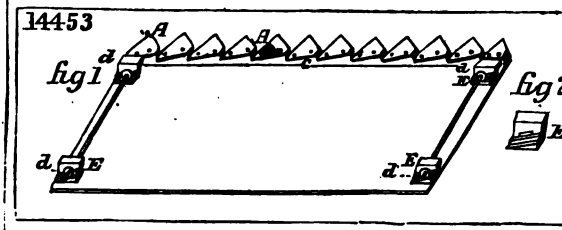

14544

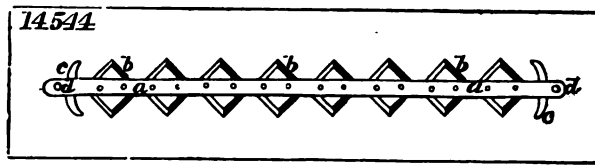

15151

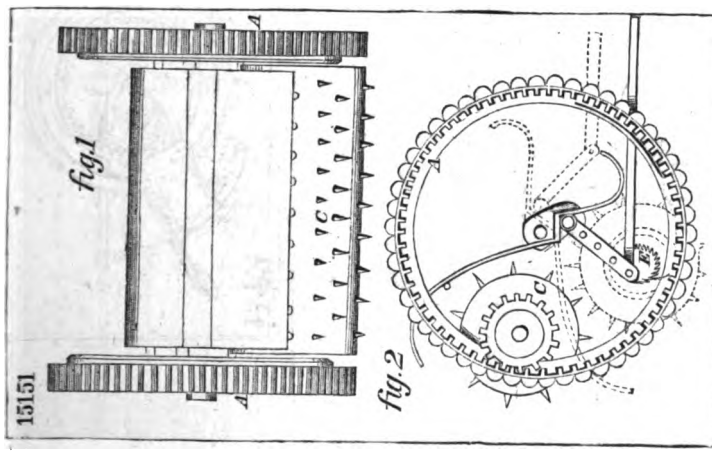

14790

Digitized by Google

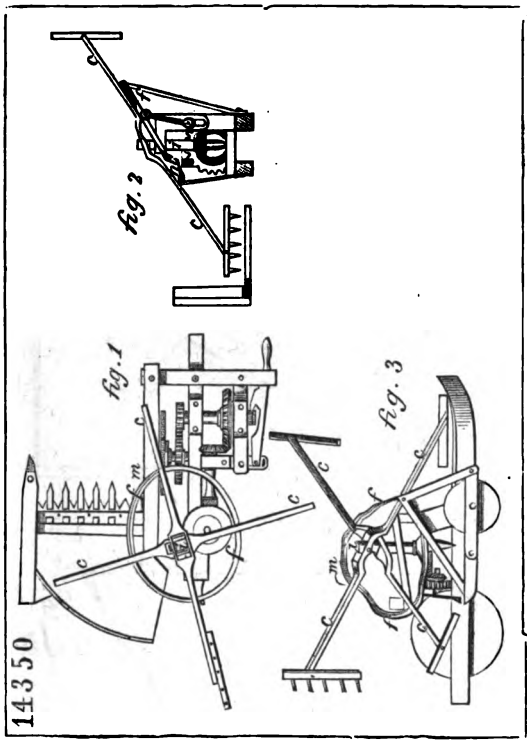

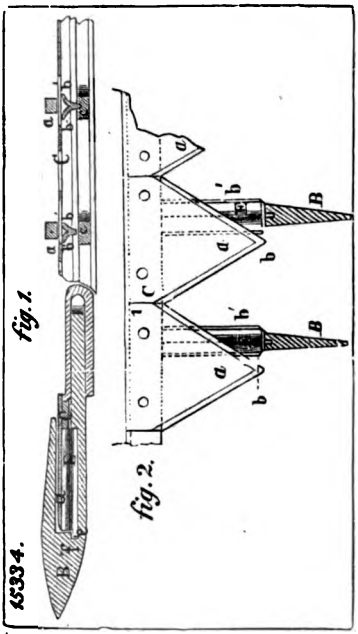

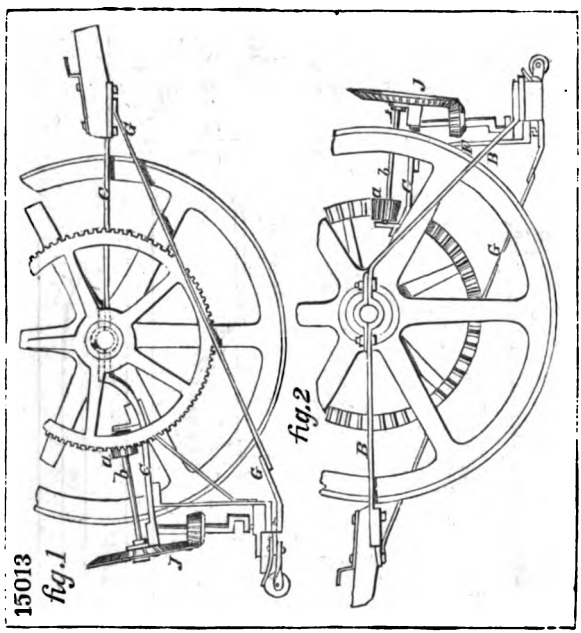

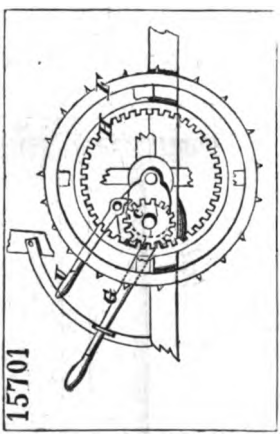

Digitized by Google

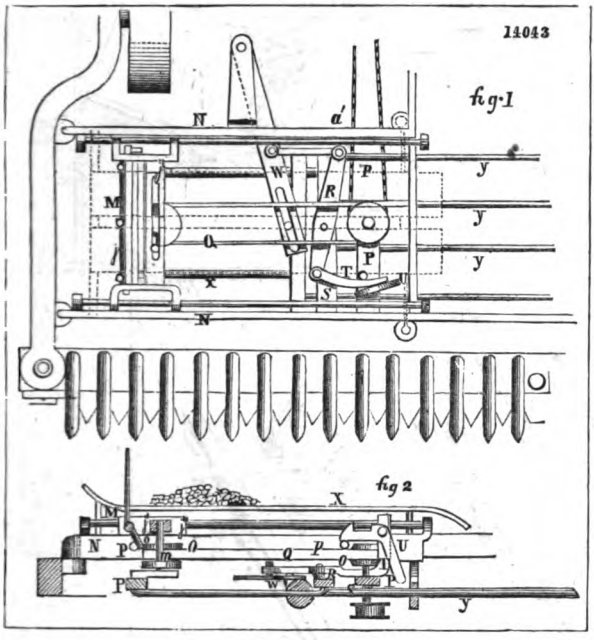

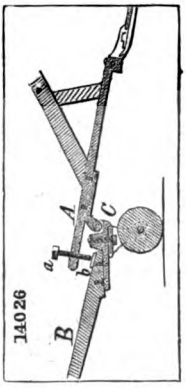

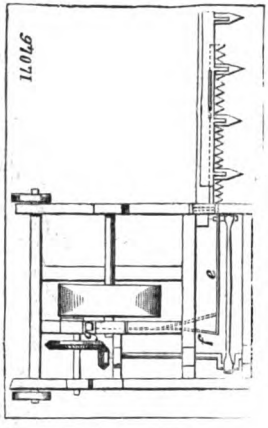

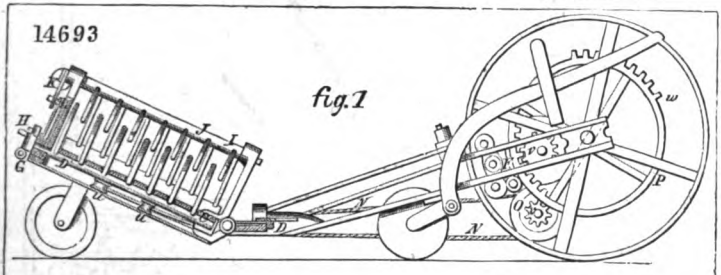

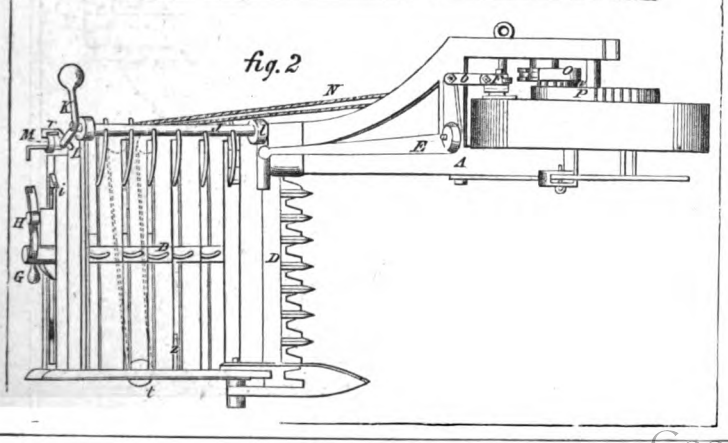

Digitized by Google

14205

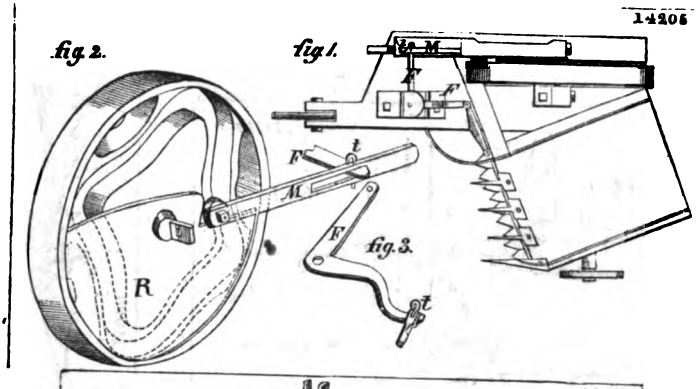

14079

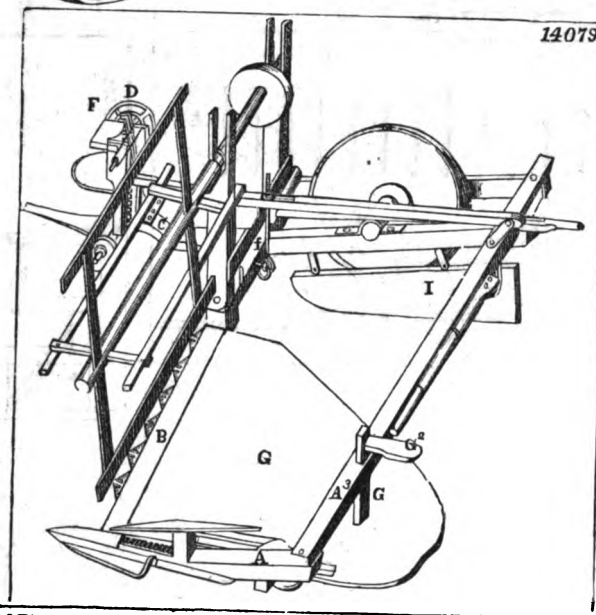

15146

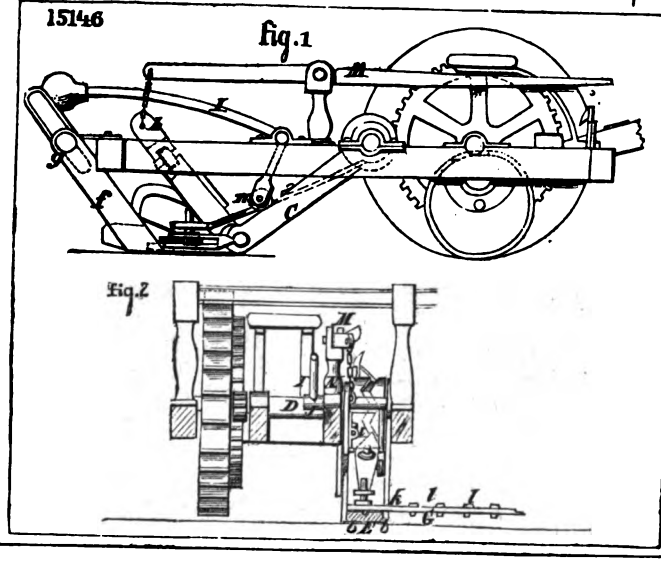

Digitized by Google

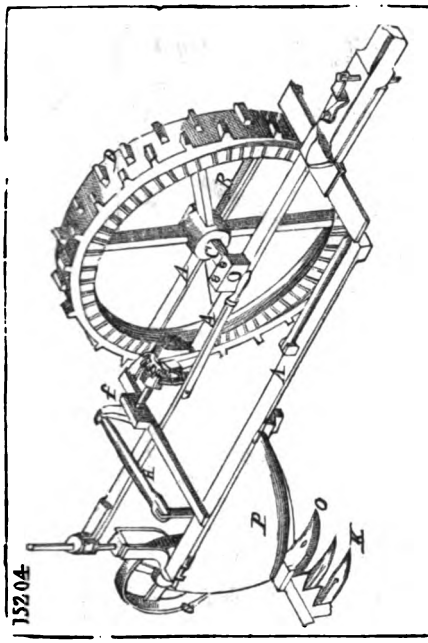
15204

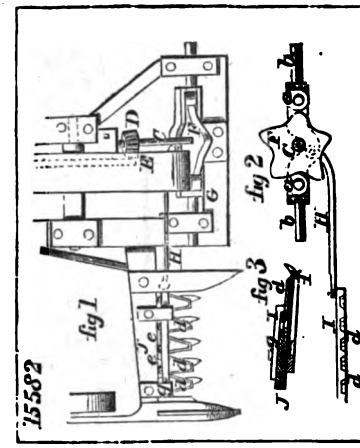
15582
fig 1
fig 2
fig 3

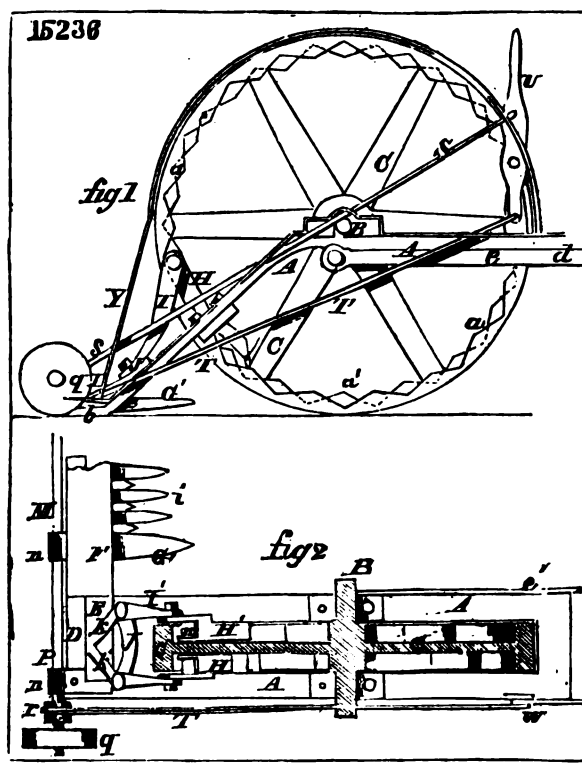
15236
fig 1
fig 2

15502

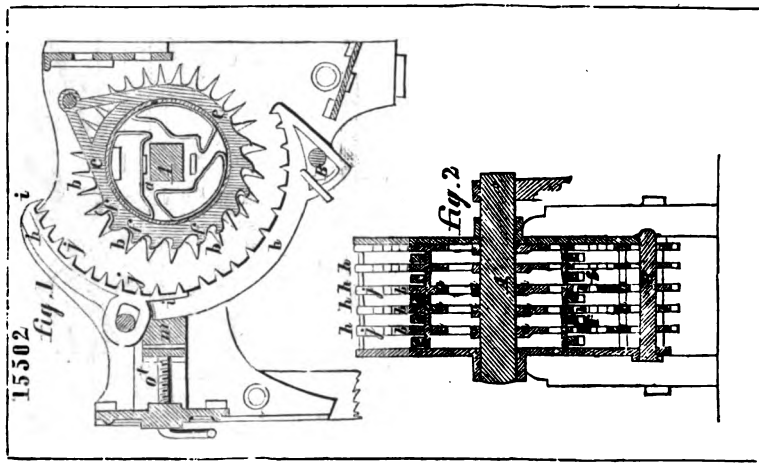

14990

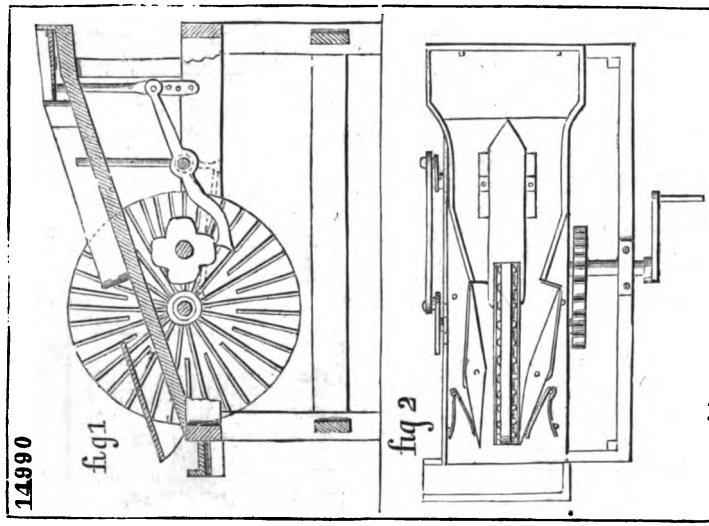

15105

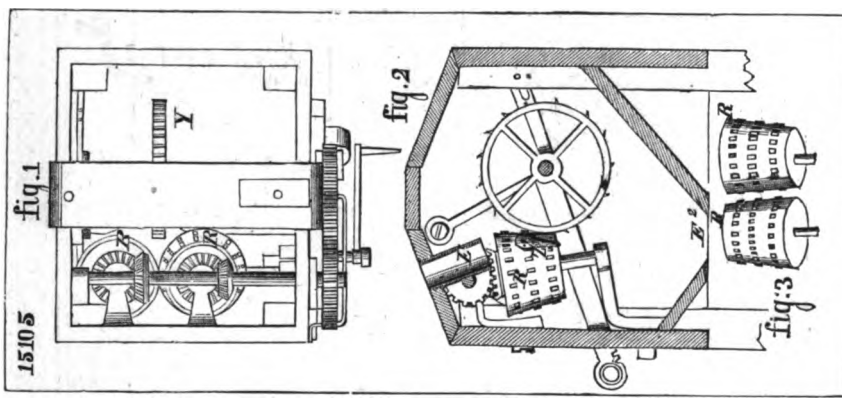

Digitized by Google

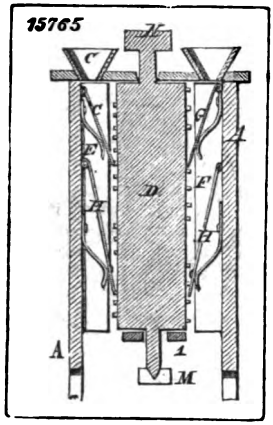

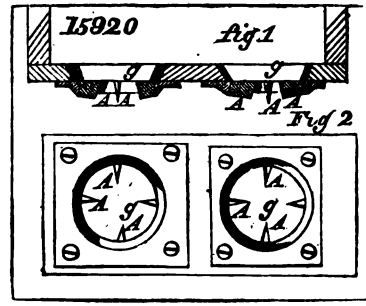

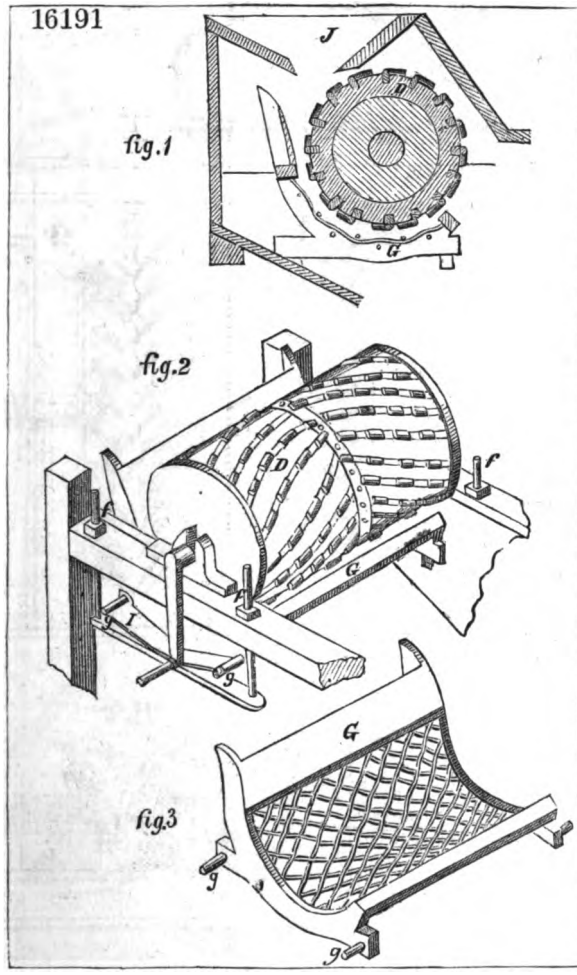

Digitized by Google

16177

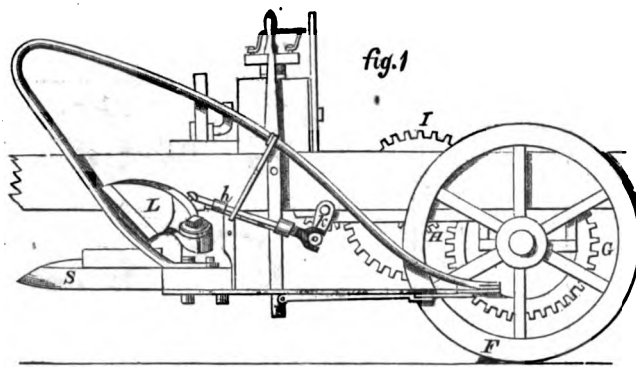

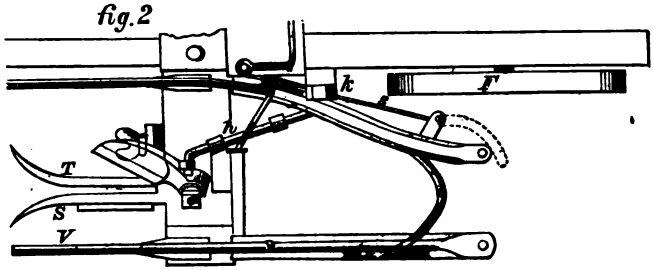

16291

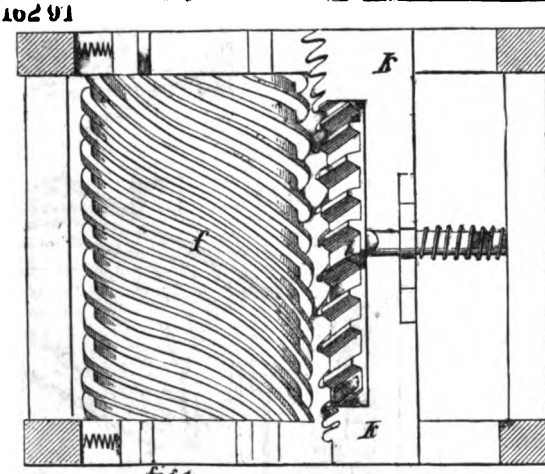

fig.1

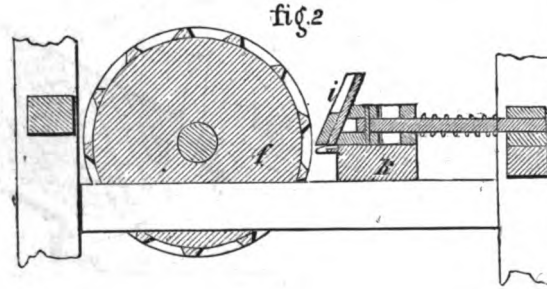

fig.2

16127

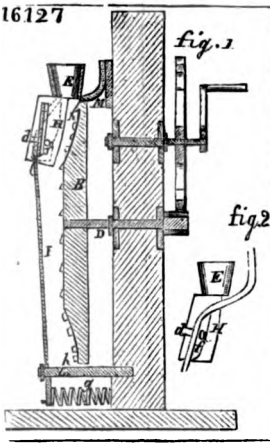

Digitized by Google

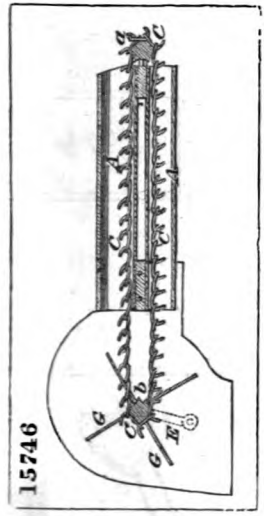

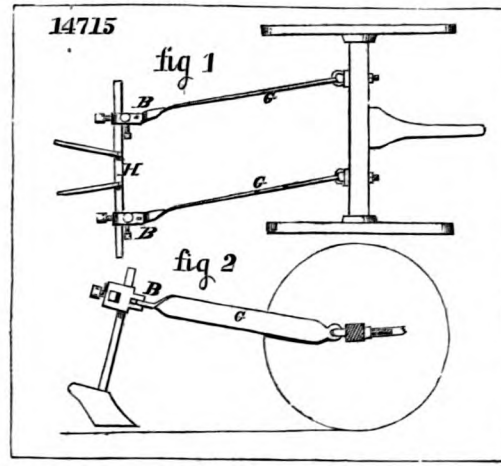

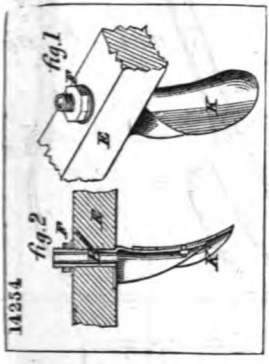

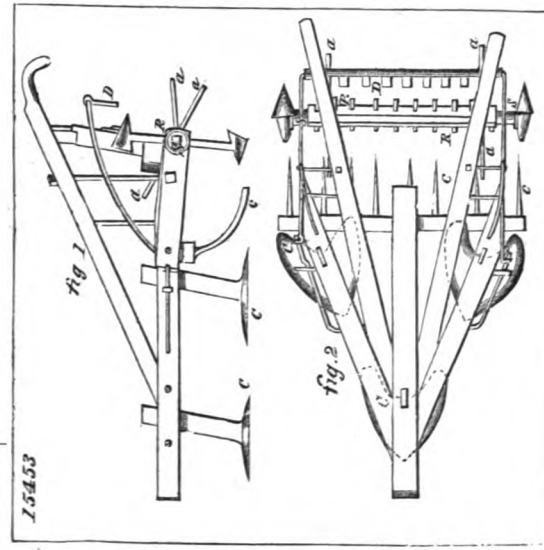

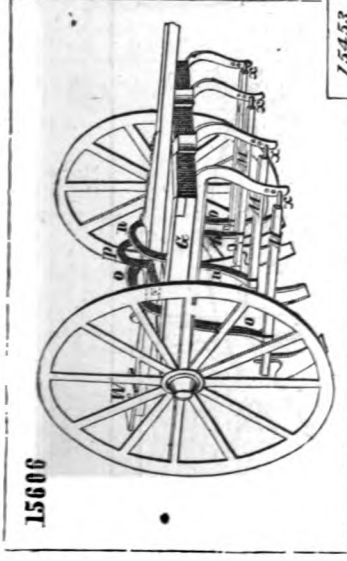

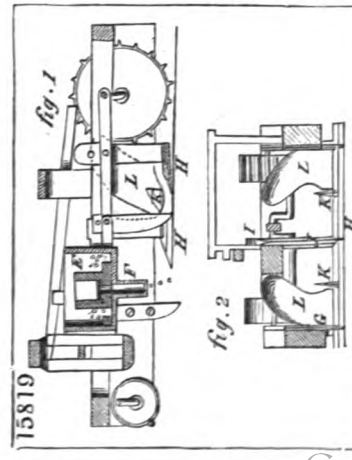

Digitized by Google

14708

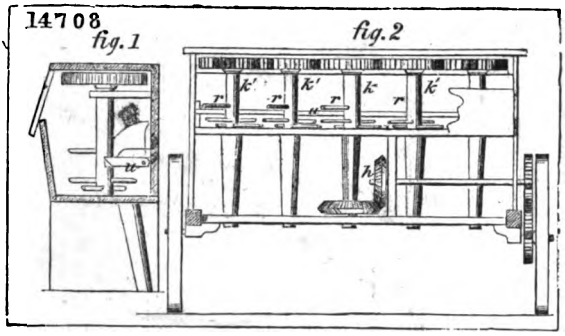

14149

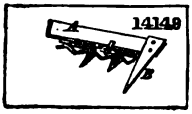

14768

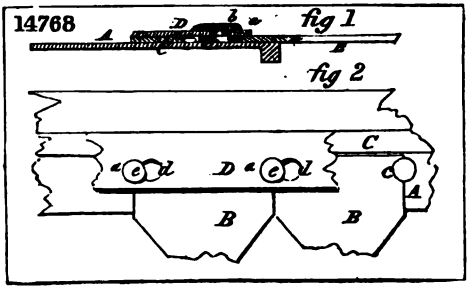

15976

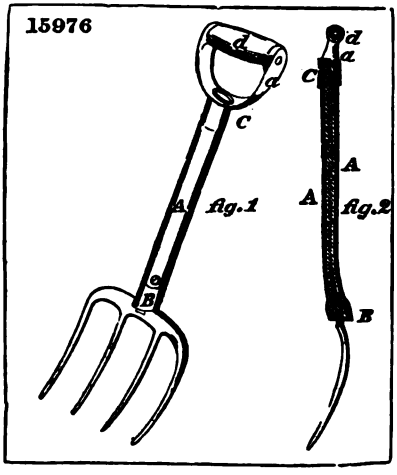

15210

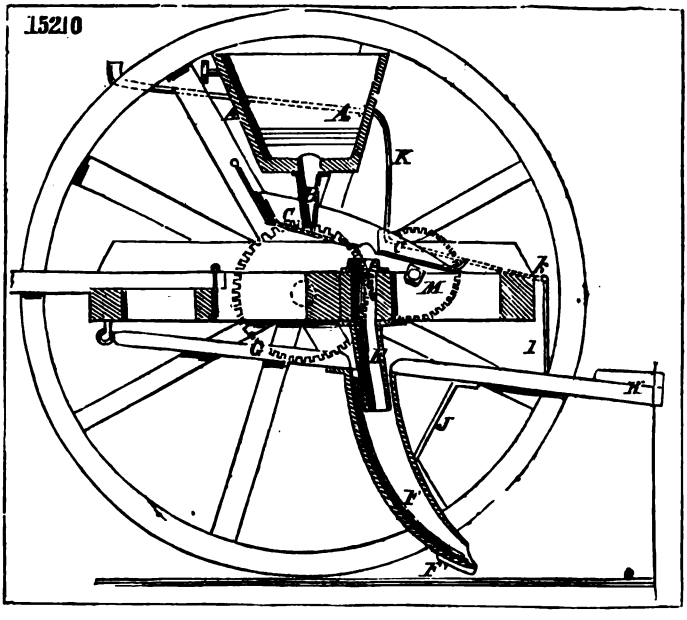

Digitized by Google

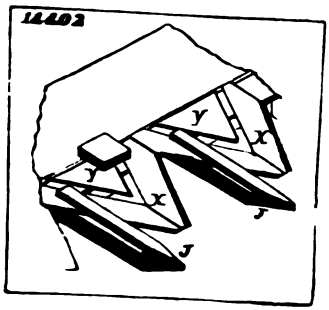

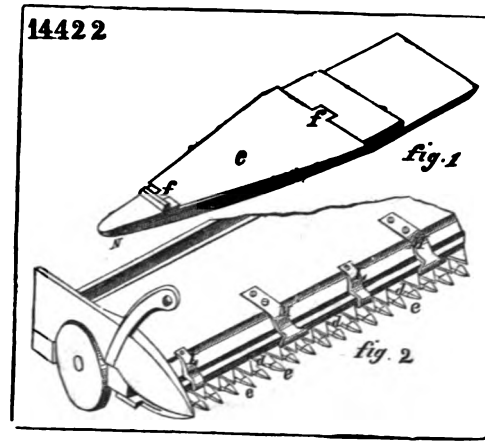

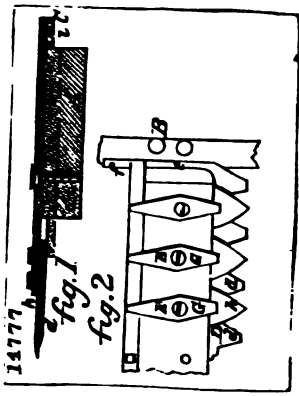

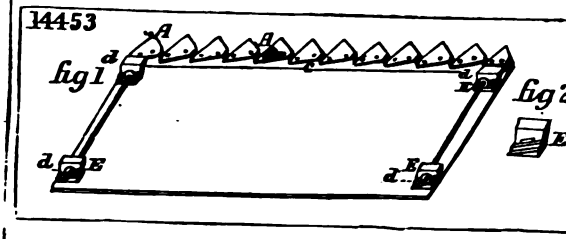

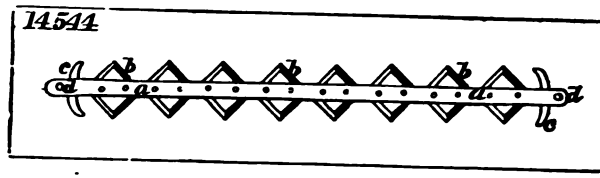

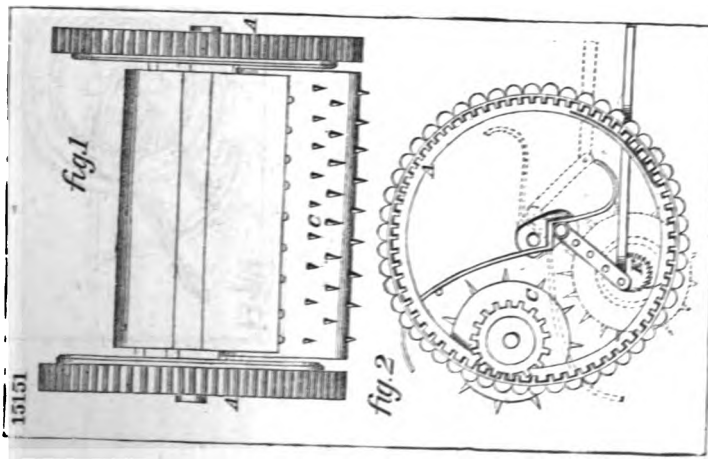

Digitized by Google

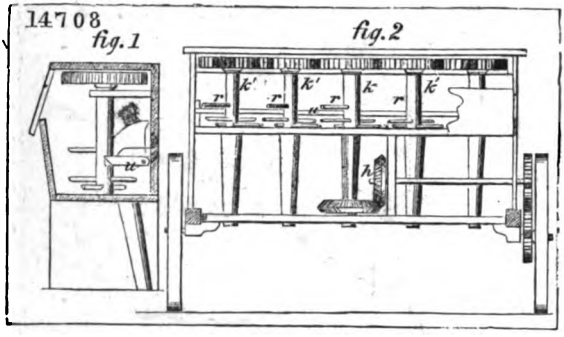

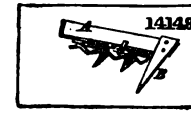

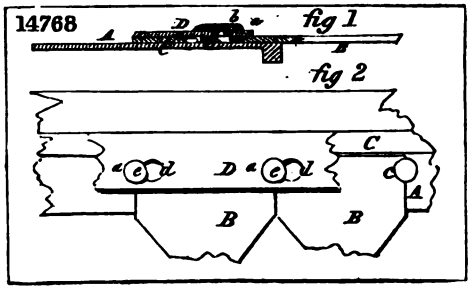

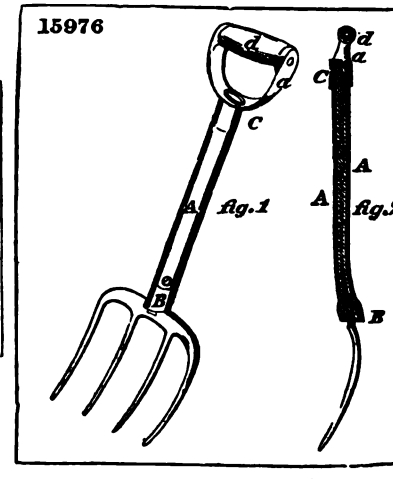

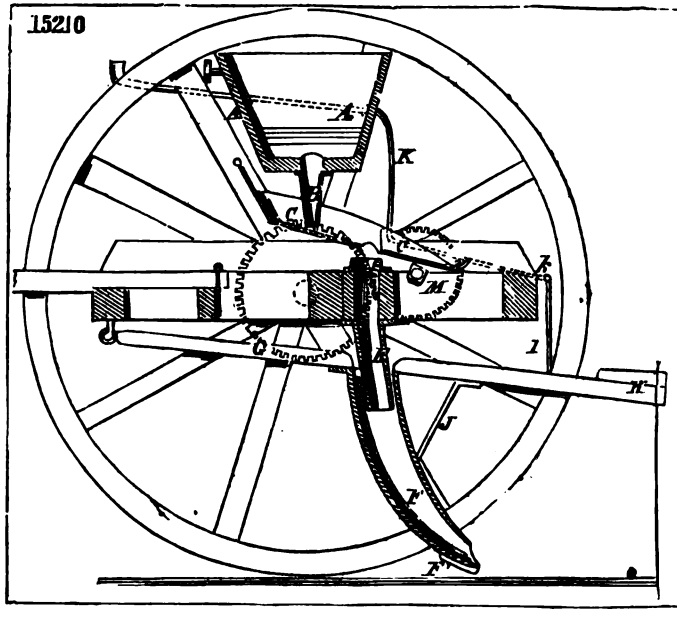

Digitized by Google

14402

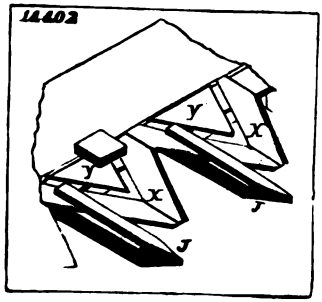

14422

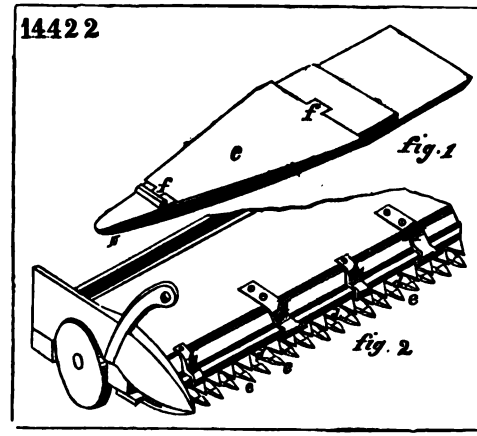

14177

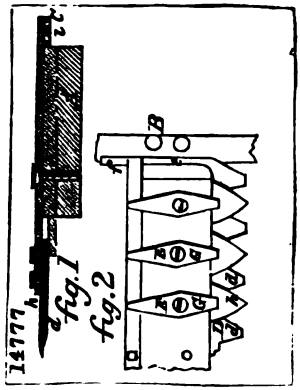

14453

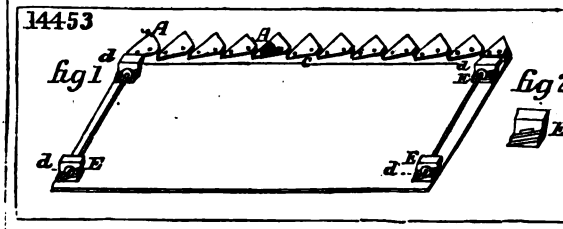

14544

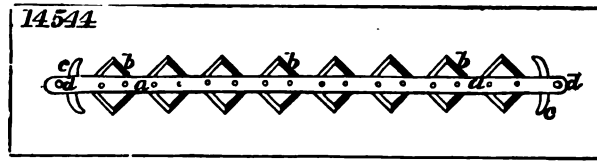

15151

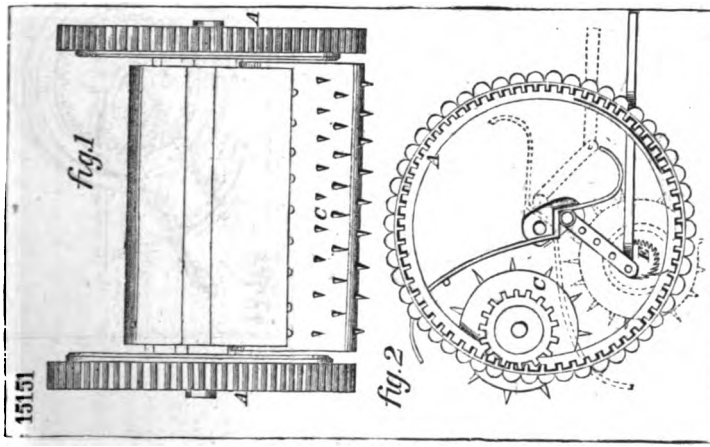

14790

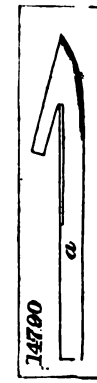

Digitized by Google

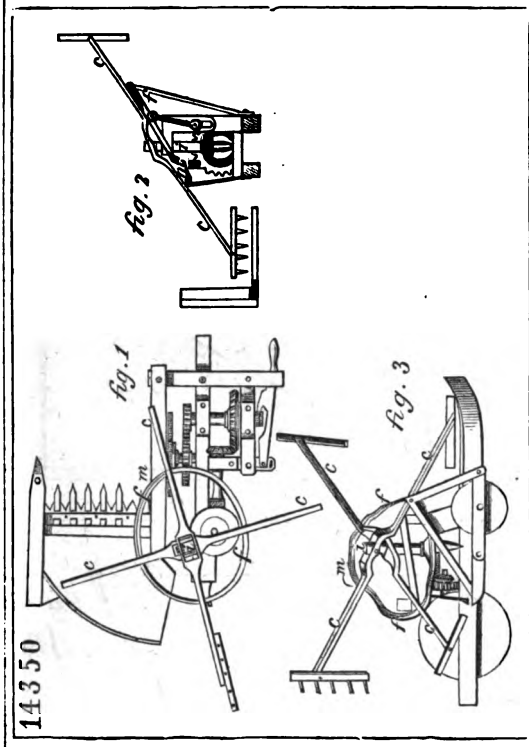

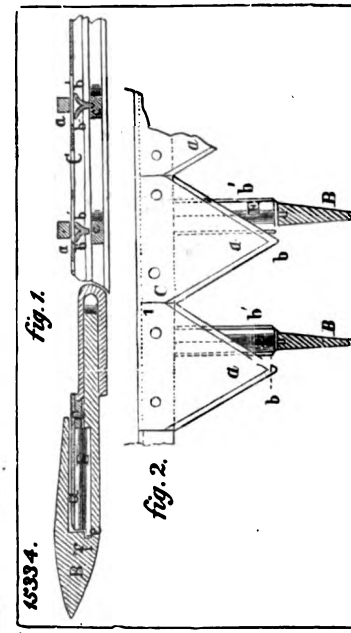

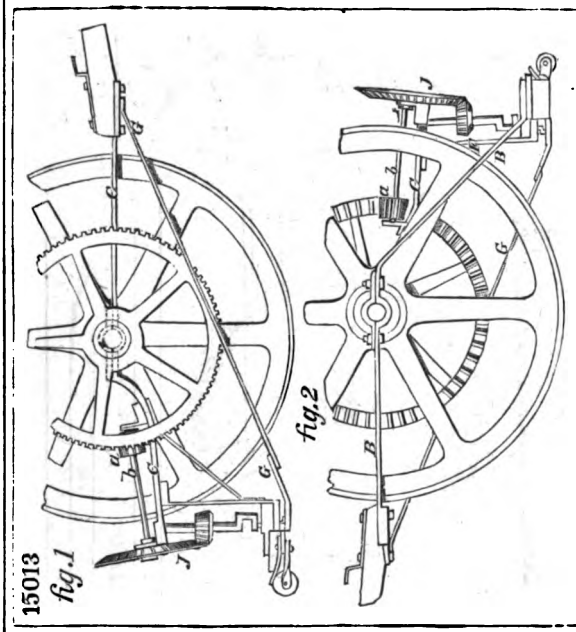

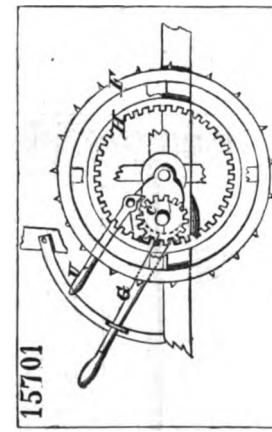

Digitized by Google

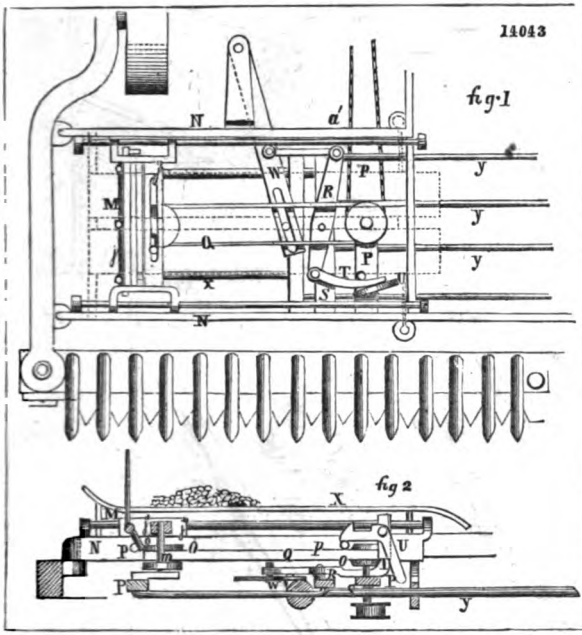

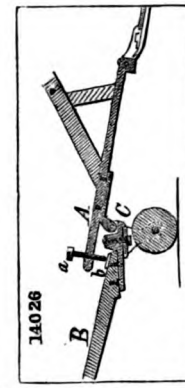

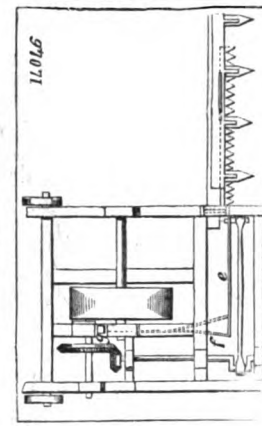

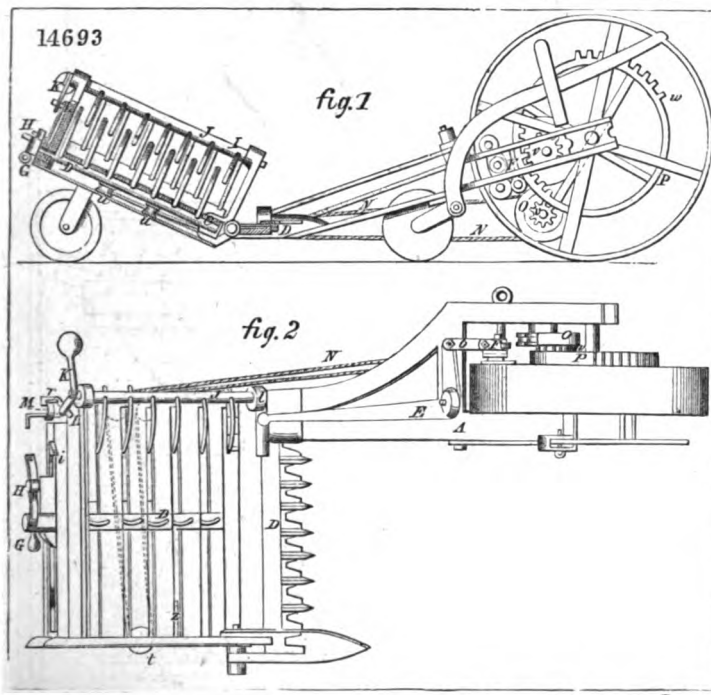

Digitized by Google

14205

fig. 2.

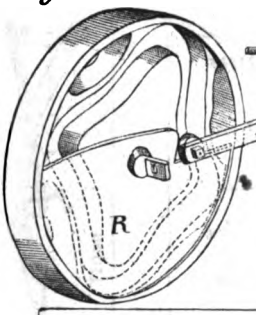

fig. 1.

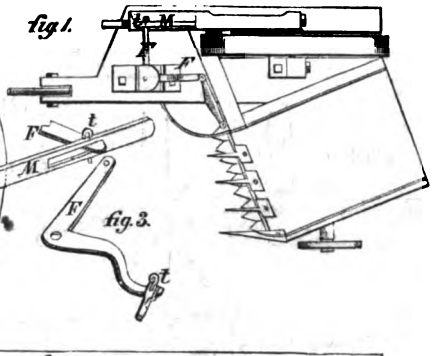

14079

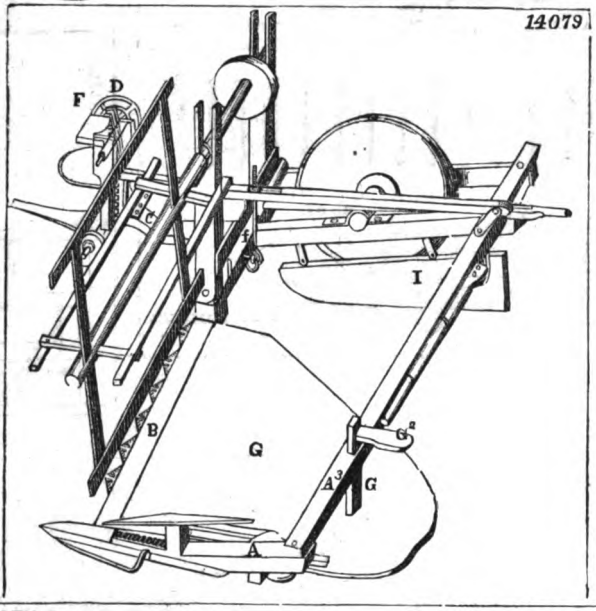

15146

fig. 1

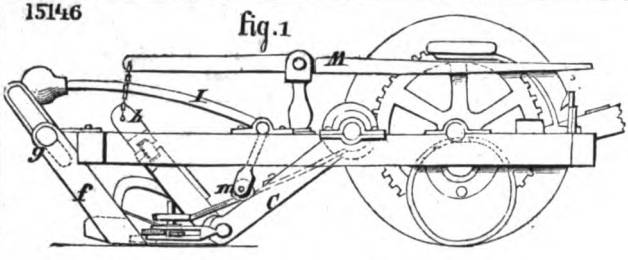

fig. 2

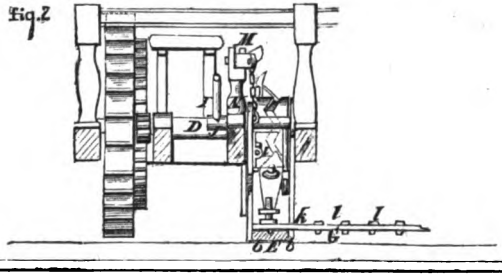

Digitized by Google

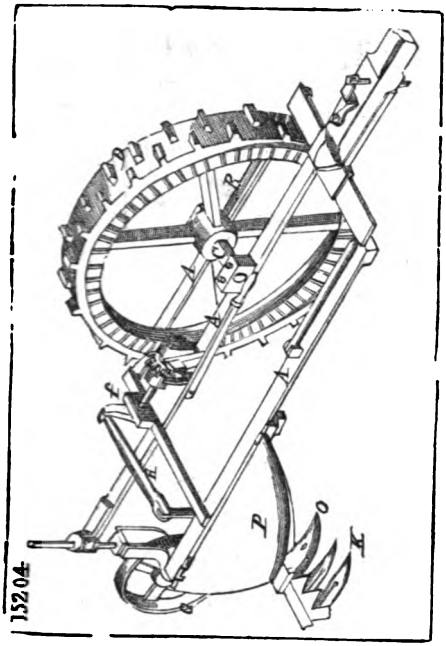
15204

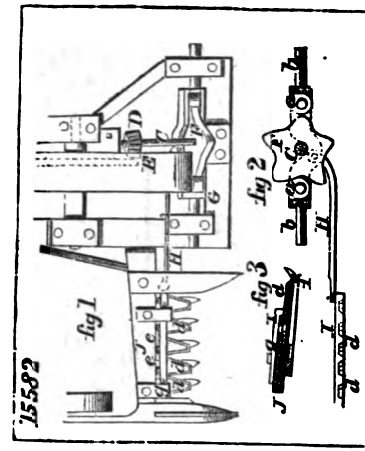
15582
fig 1
fig 2
fig 3

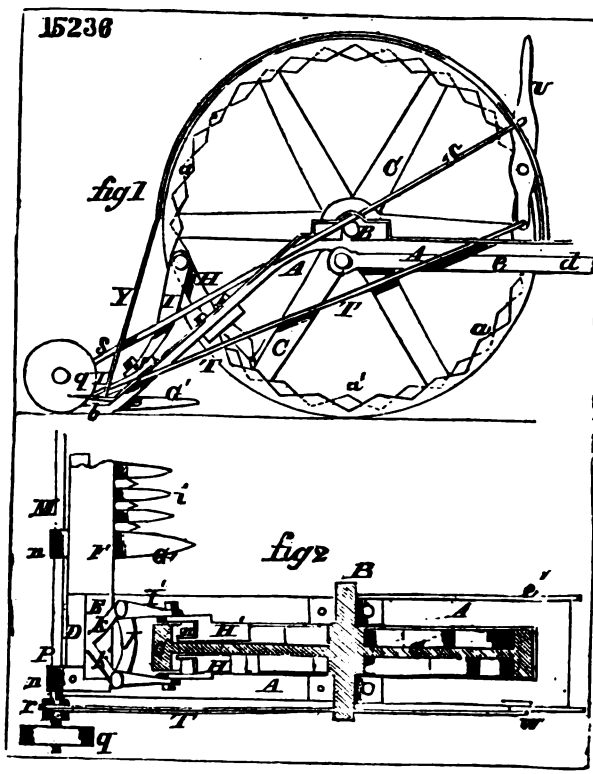
15236
fig 1
fig 2

15721

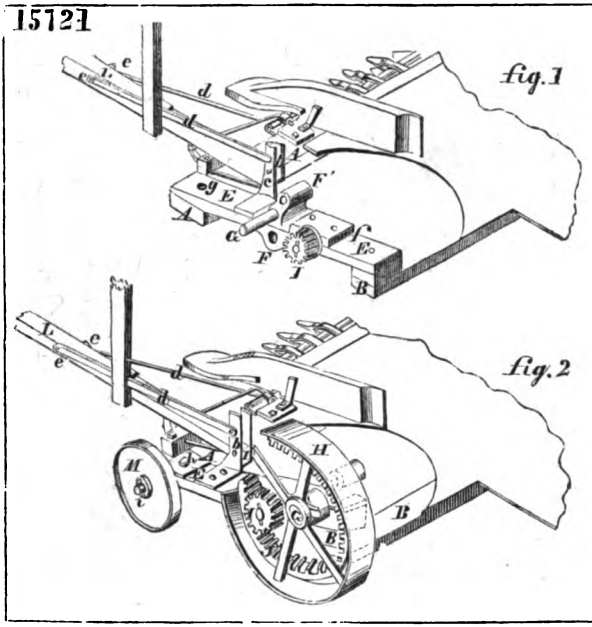

15638

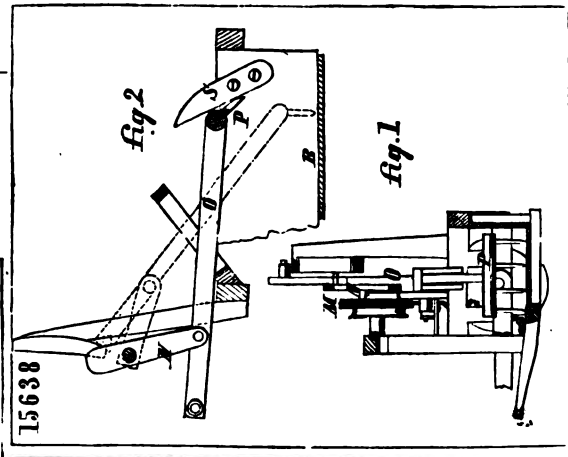

15843

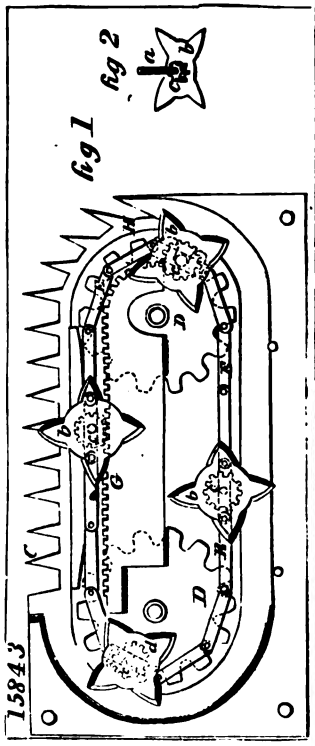

16377

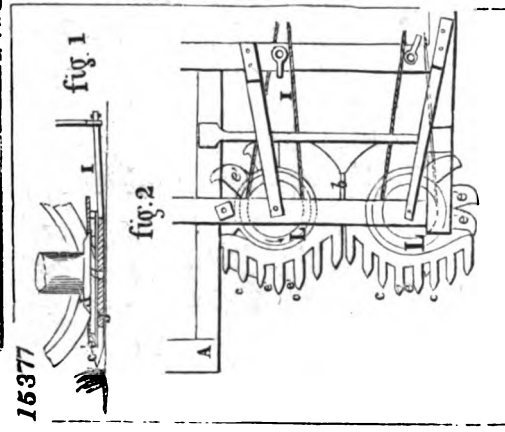

Digitized by Google

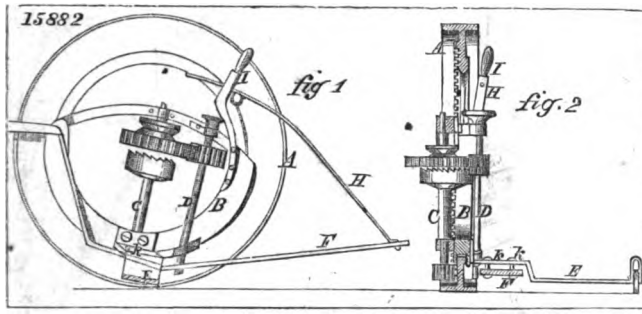

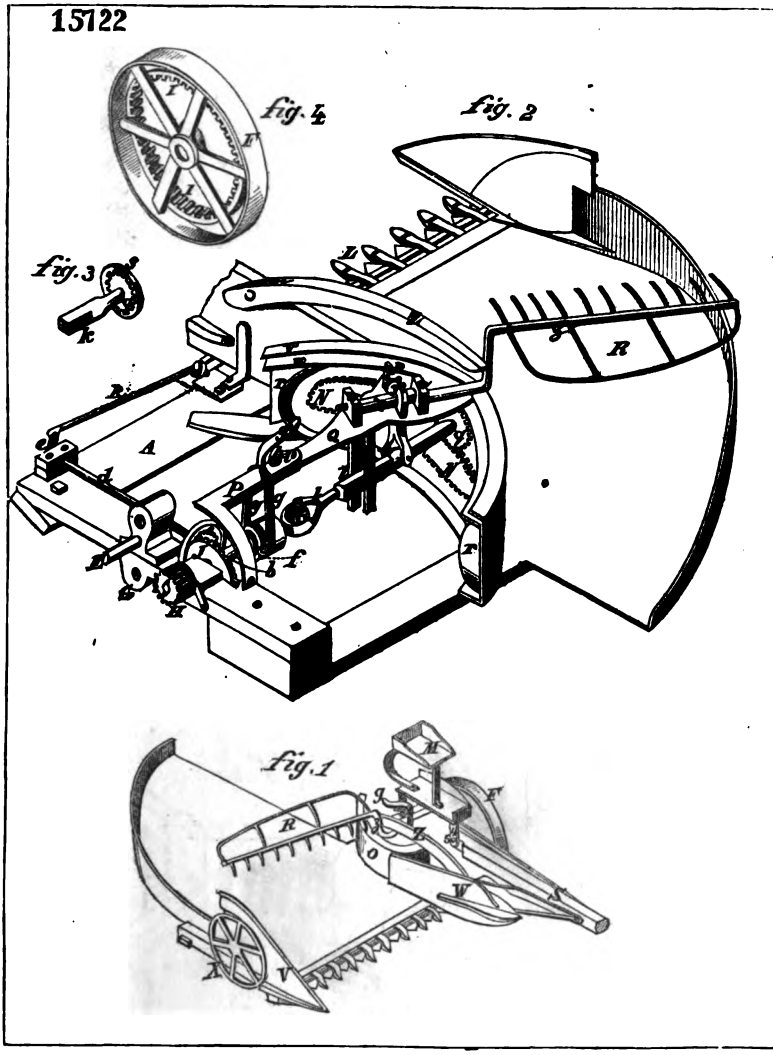

Digitized by Google

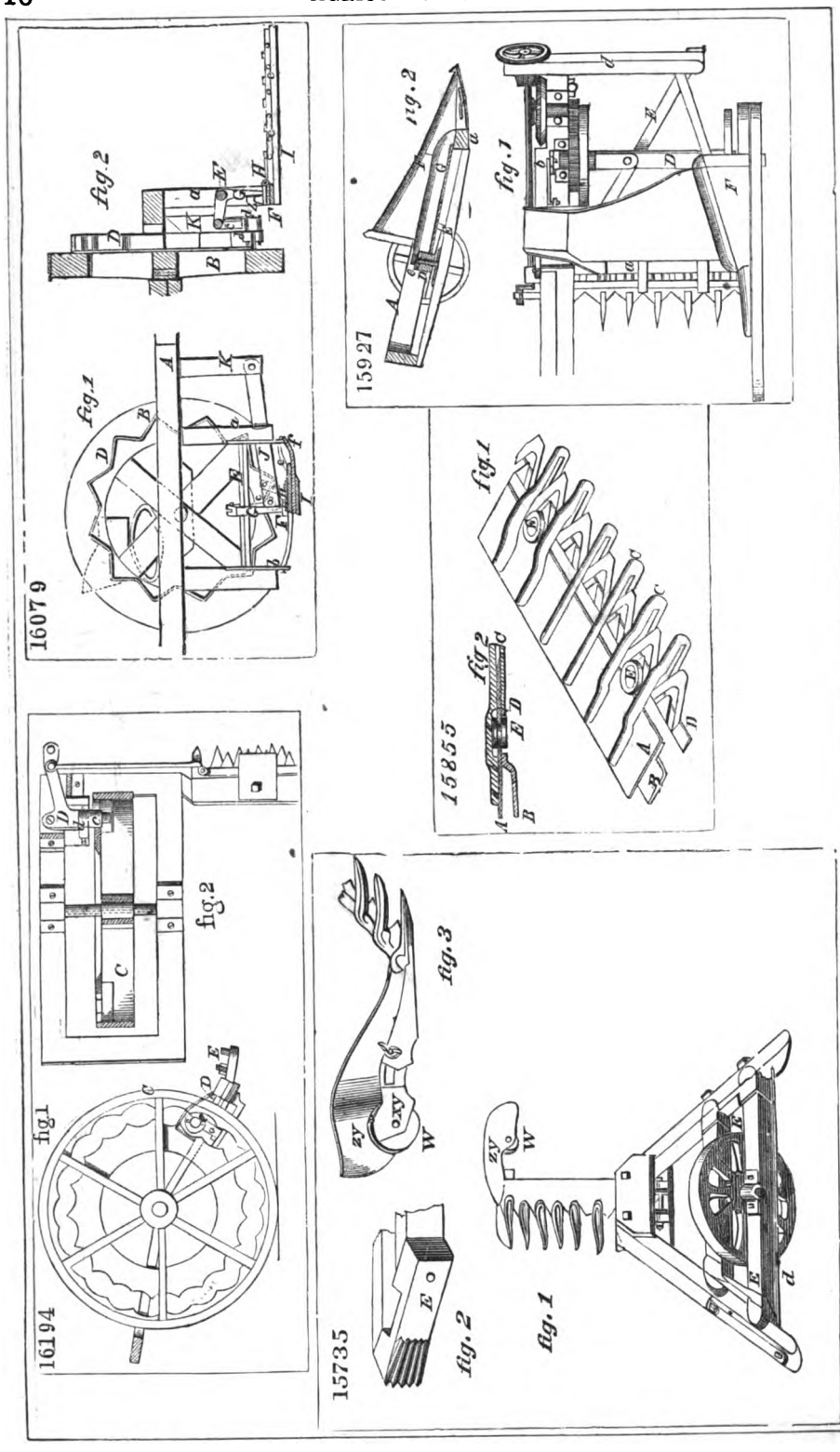

Digitized by Google

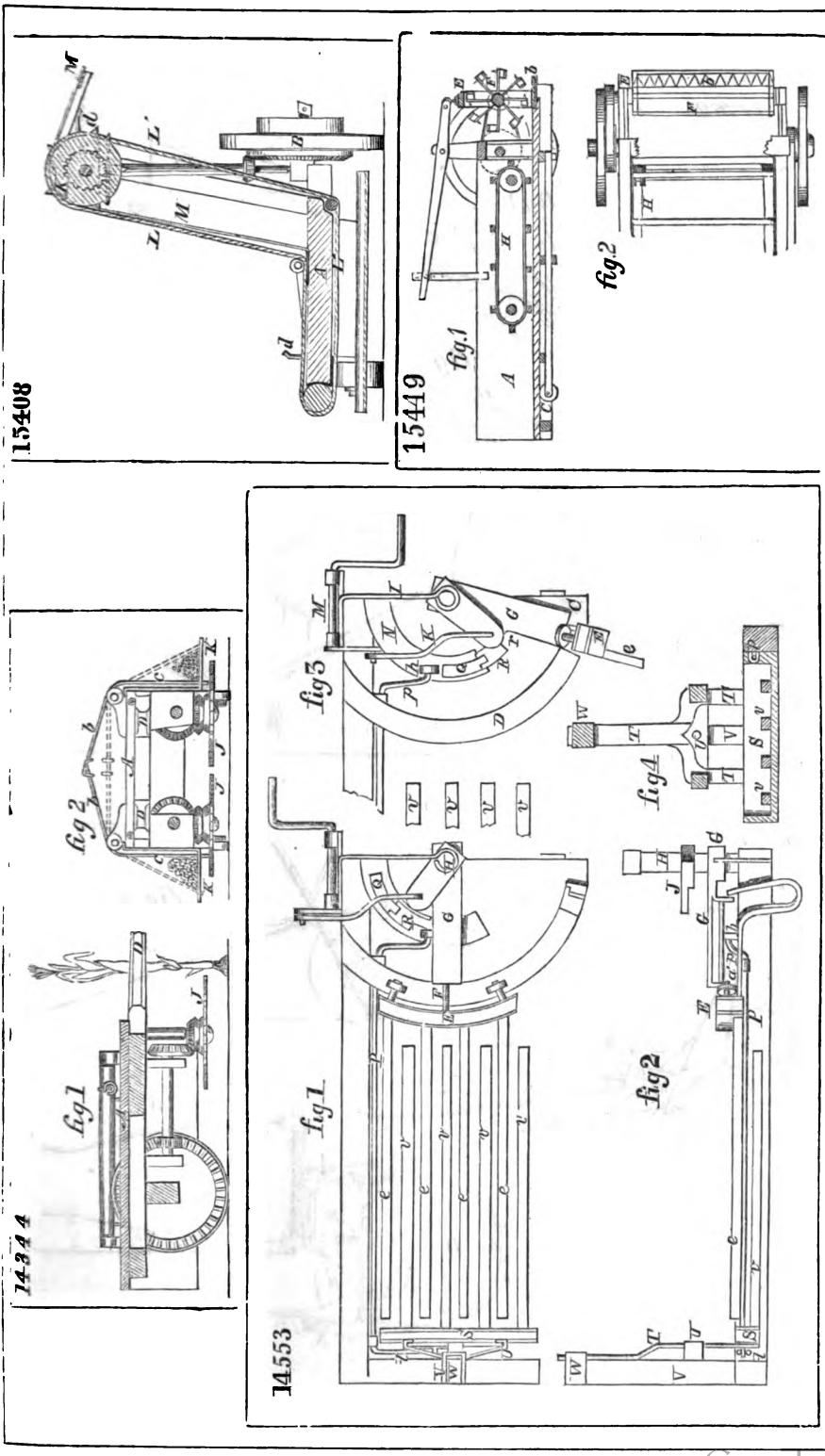

Digitized by Google

14769

fig 1

fig 2

14076

fig 1

fig. 2

fig. 3

Digitized by Google

14250

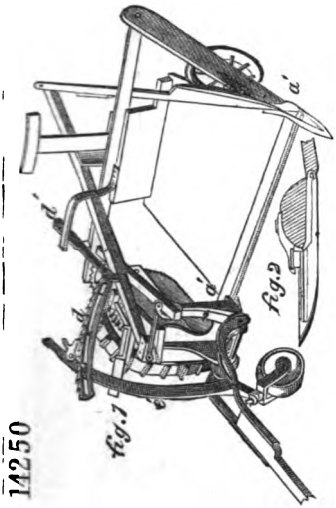

15205

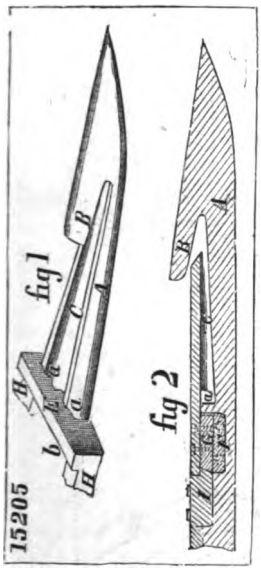

16307

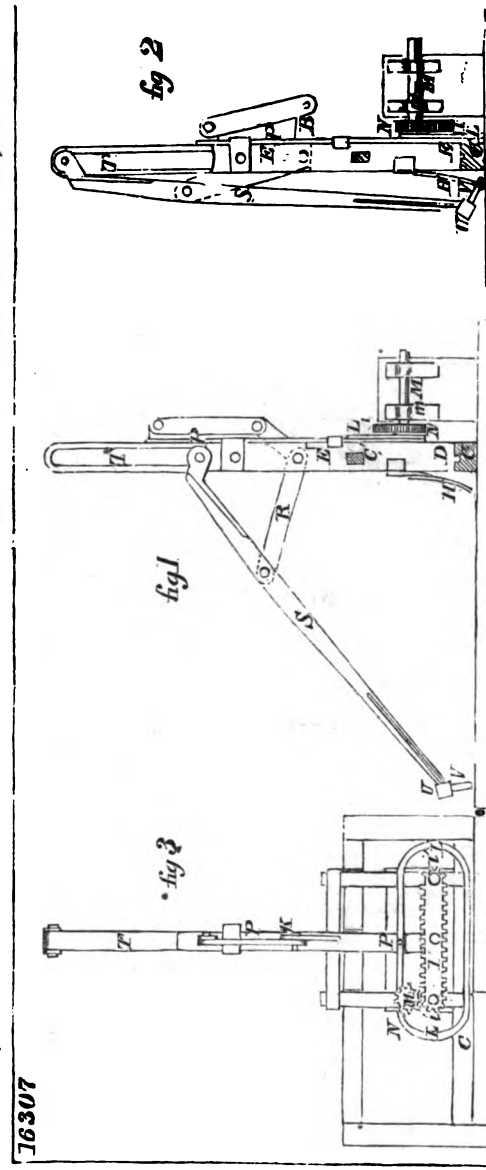

Digitized by Google

14730

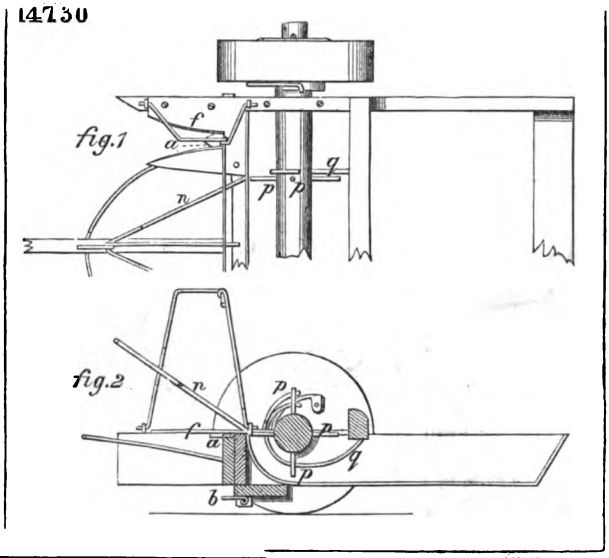

15533

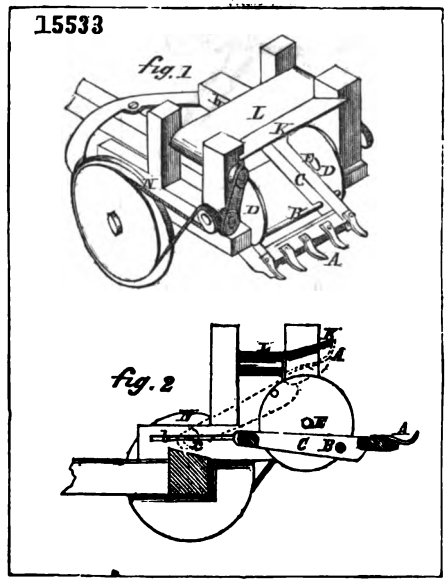

15677

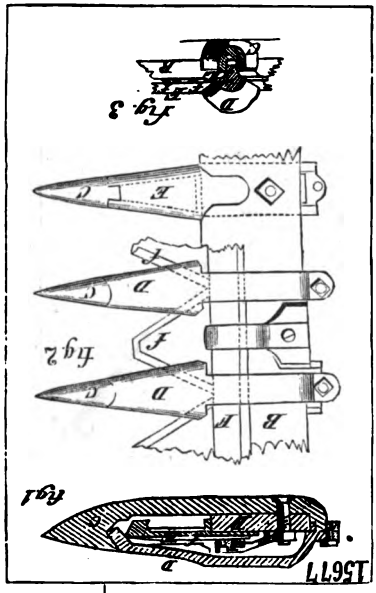

15409

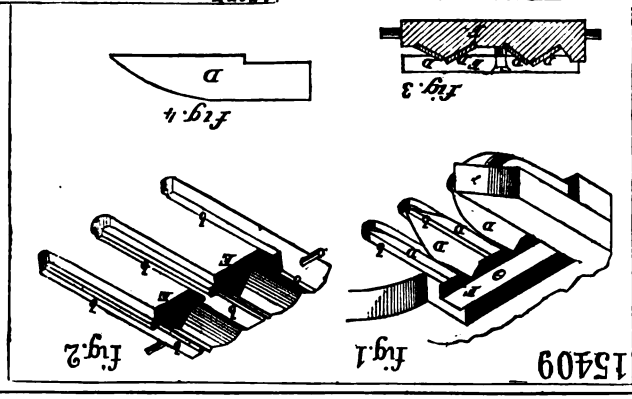

Digitized by Google

16134

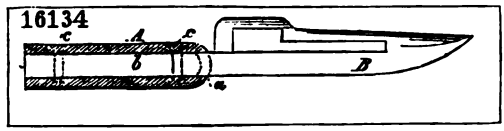

15152

fig 1

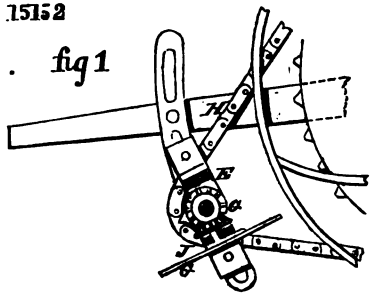

fig 2

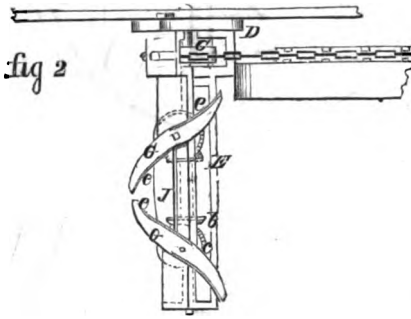

14761

fig 1

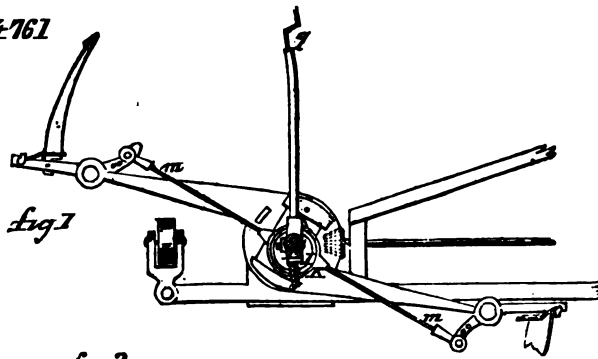

fig 2

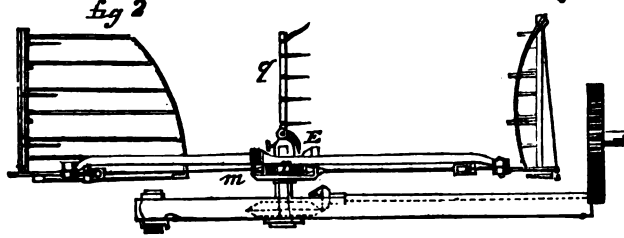

Digitized by Google

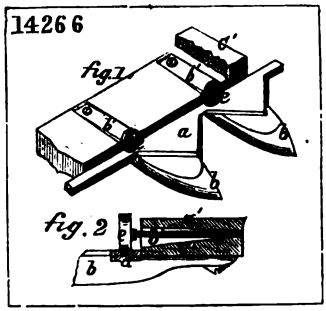

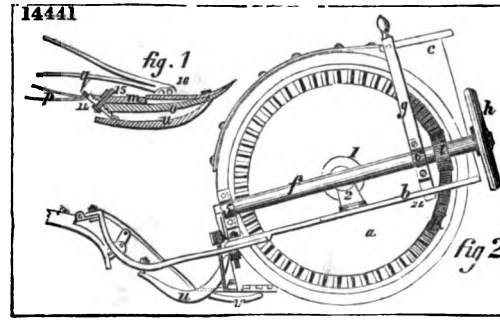

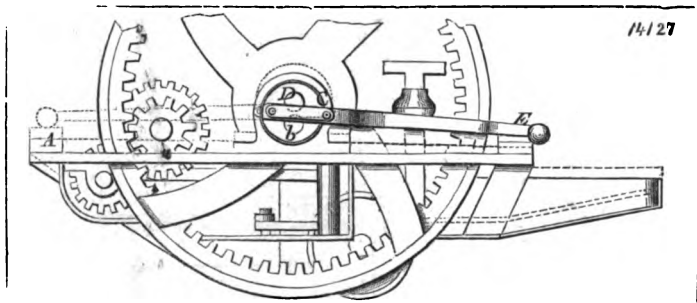

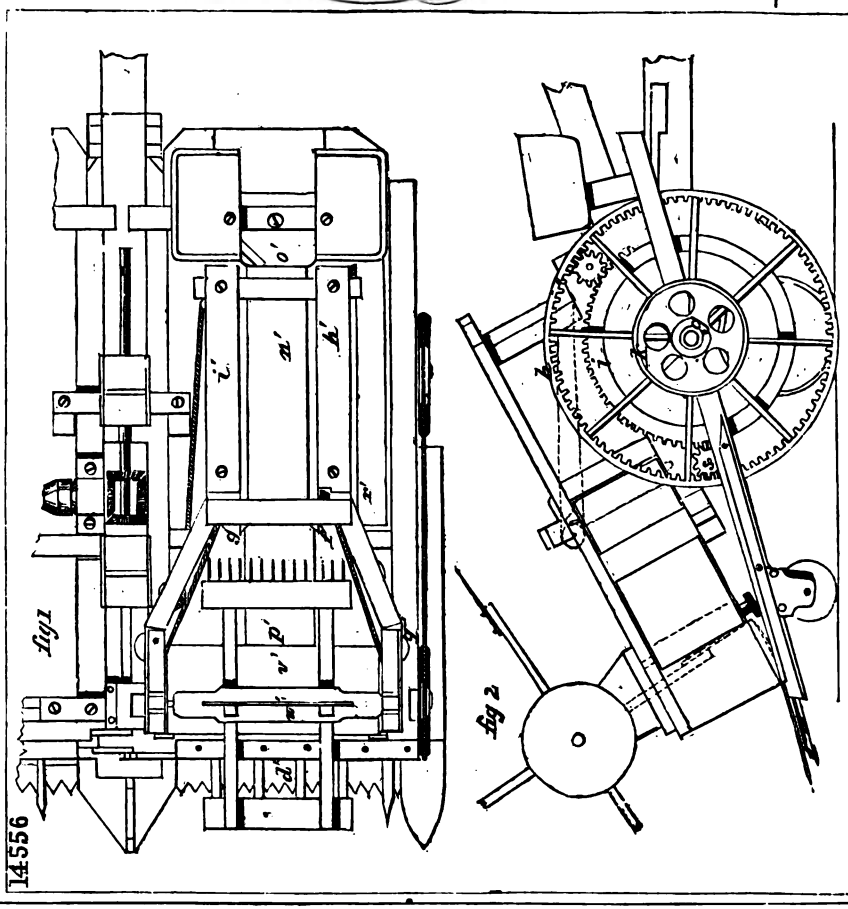

Digitized by Google

14582

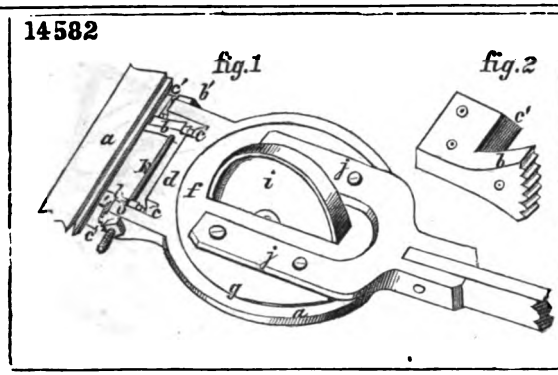

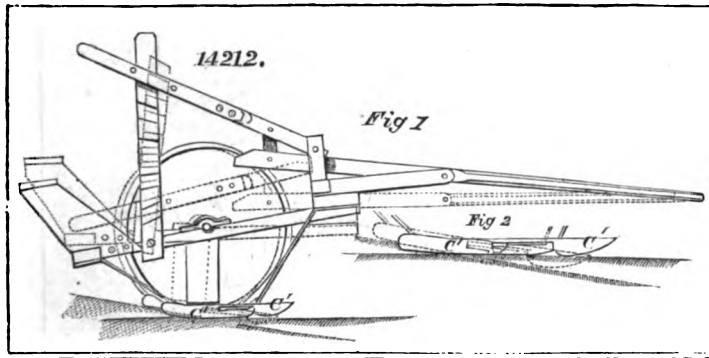

14980

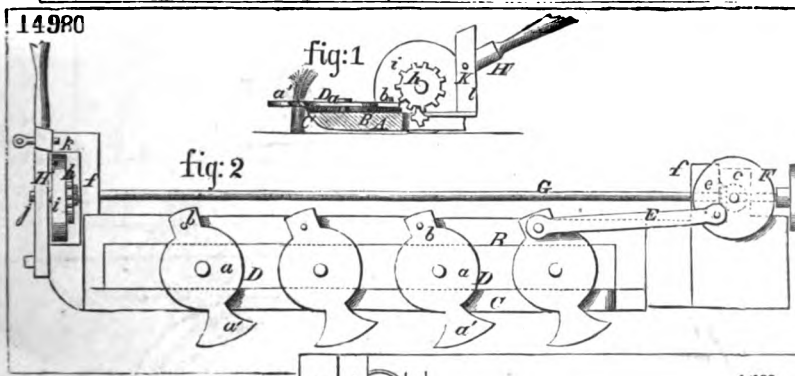

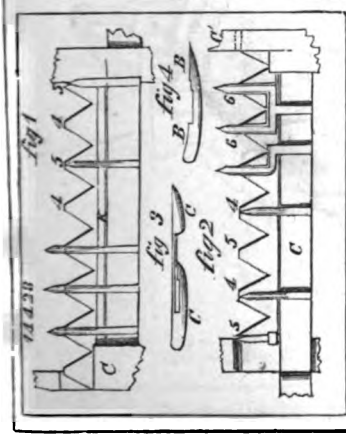

14102

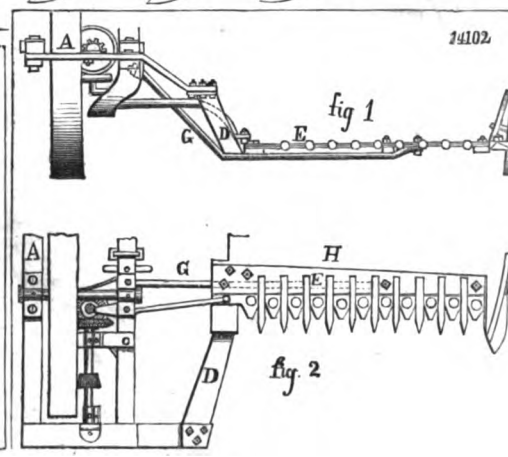

Digitized by Google

14266

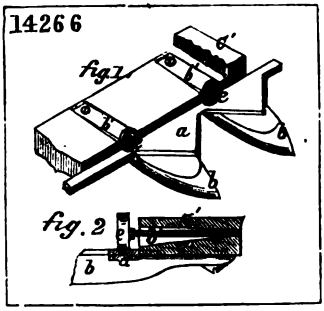

14441

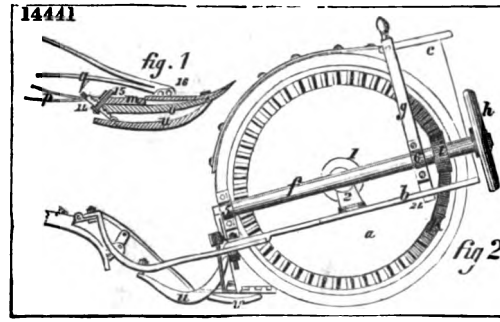

14127

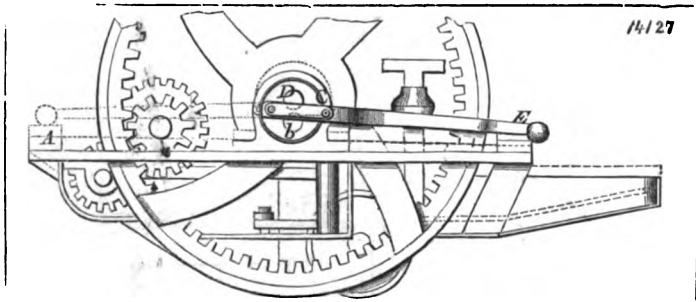

14556

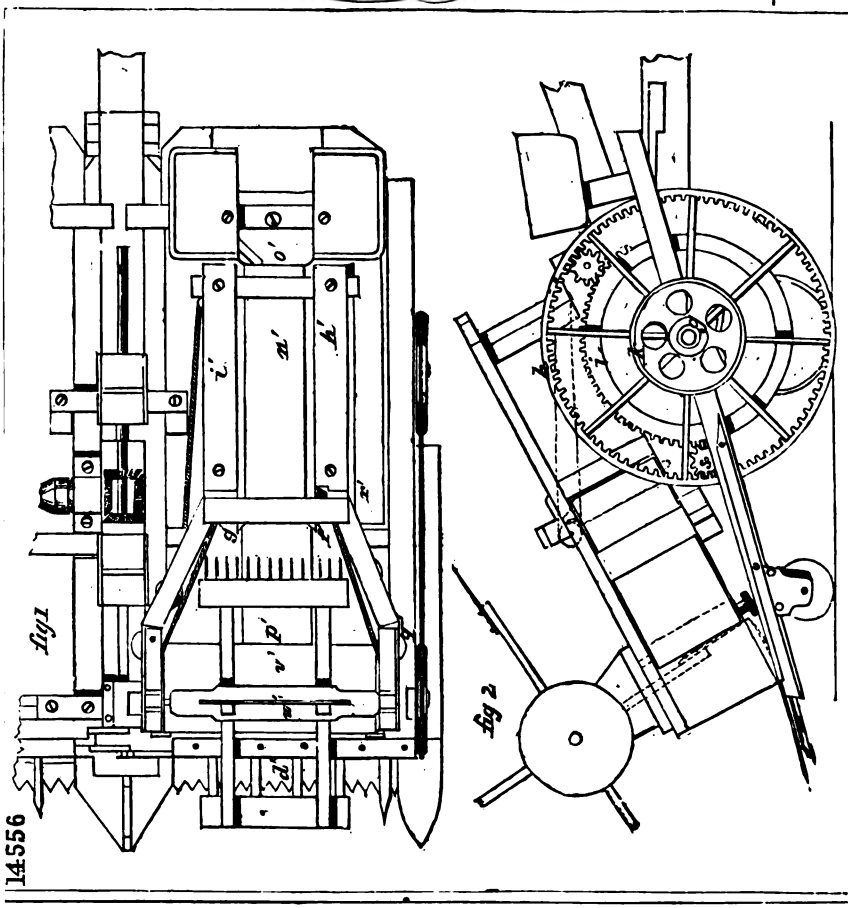

Digitized by Google

14582

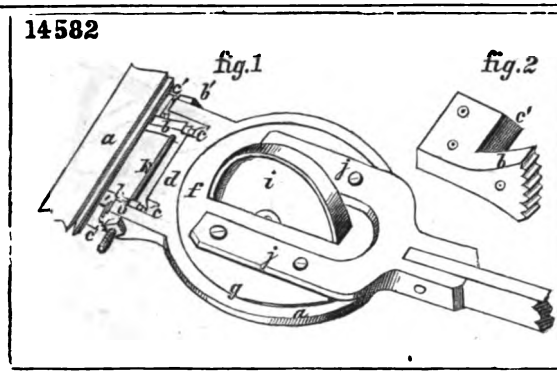

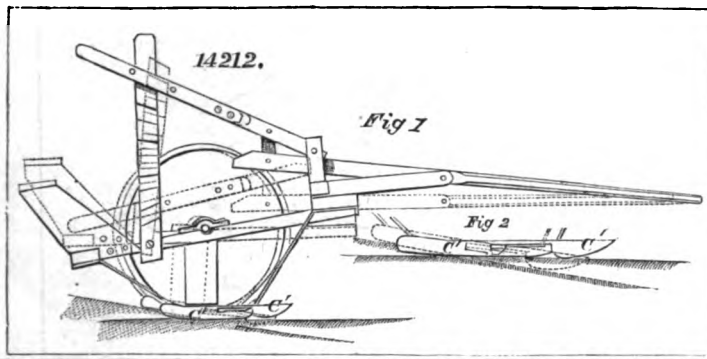

14980

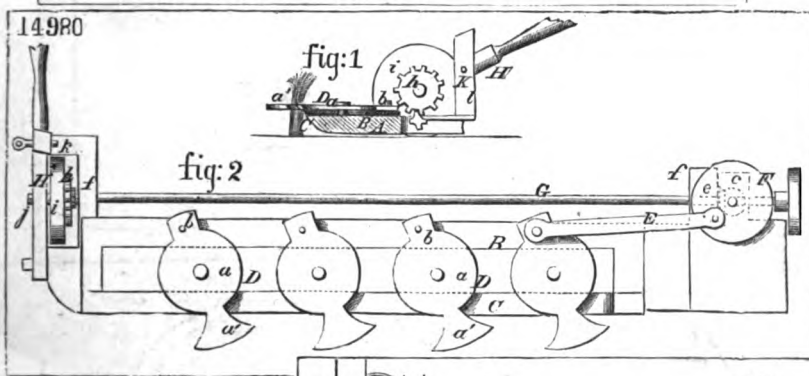

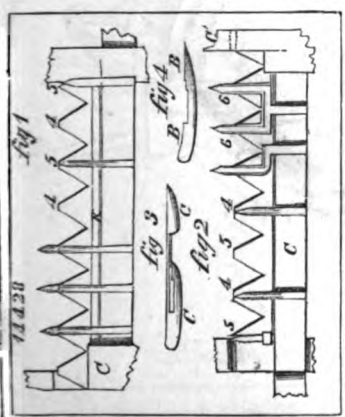

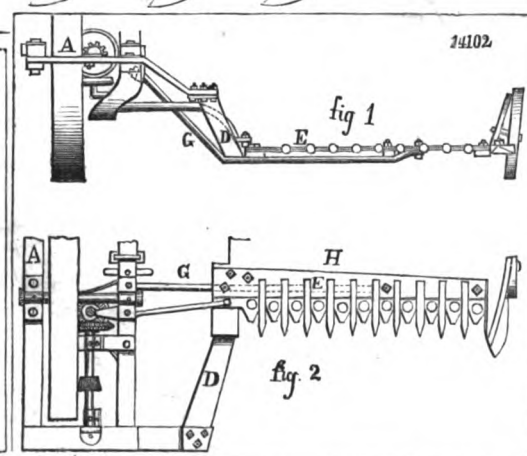

Digitized by Google

14148

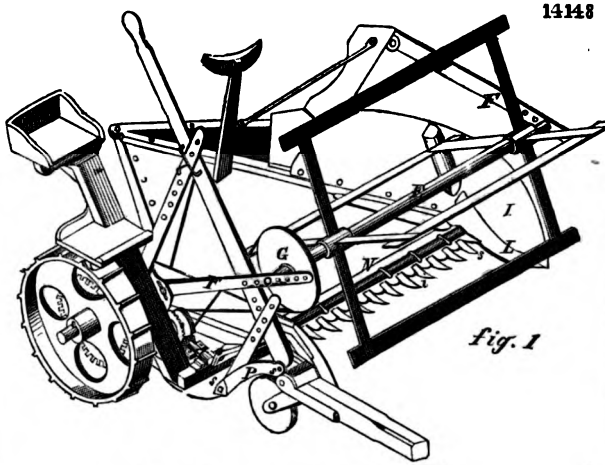

fig. 1

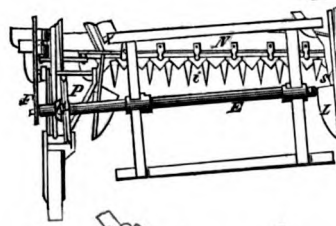

fig. 2

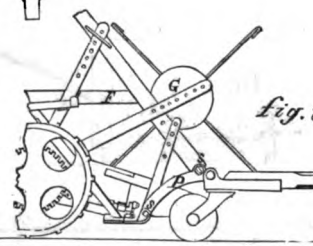

fig. 3

14448

fig 1

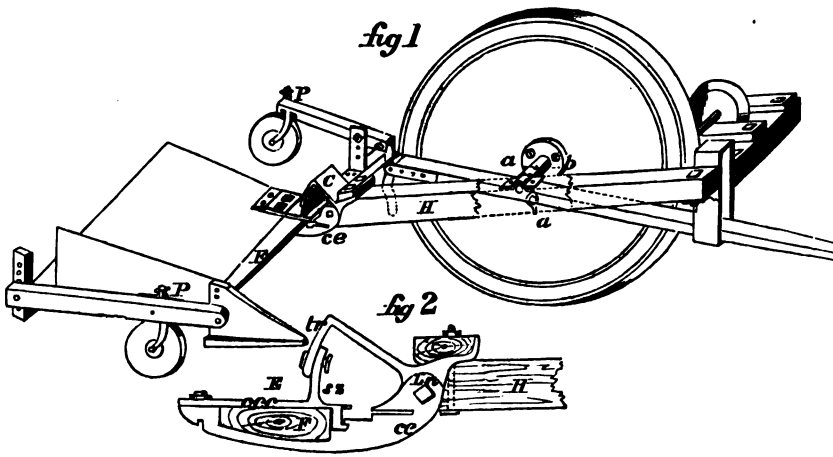

fig 2

Digitized by Google

14661

14541

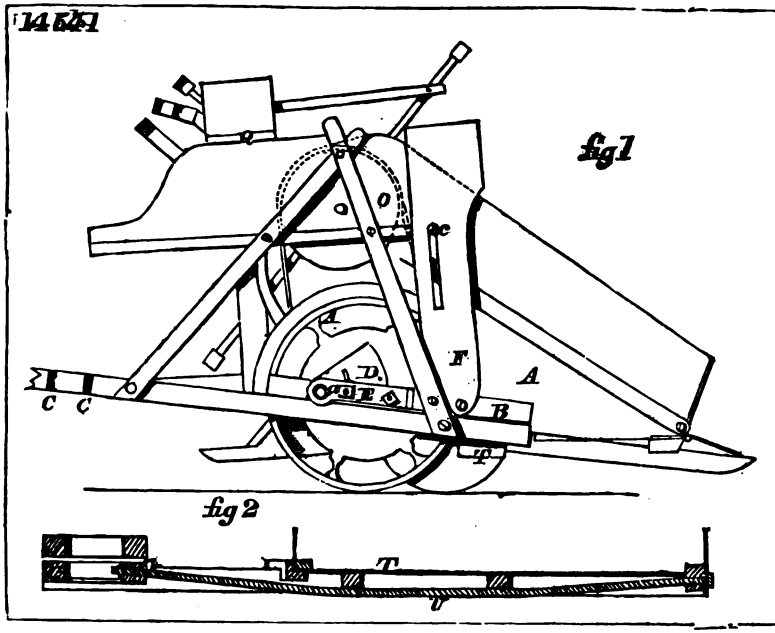

14409

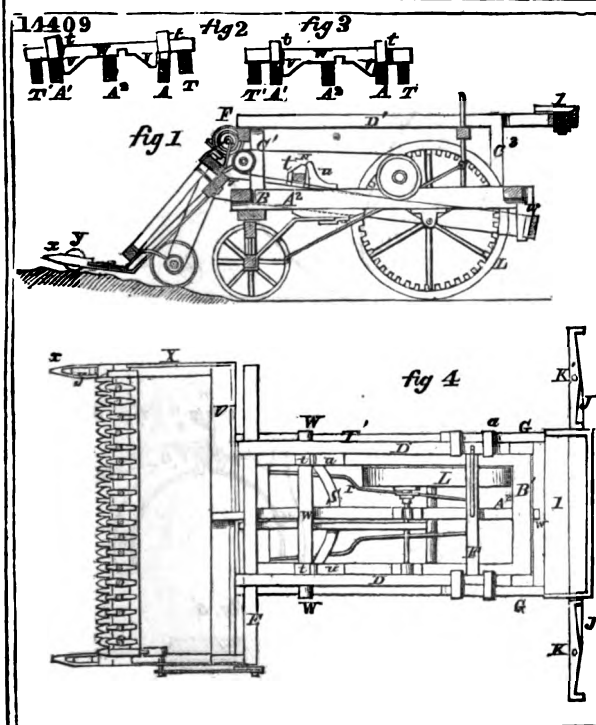

14694

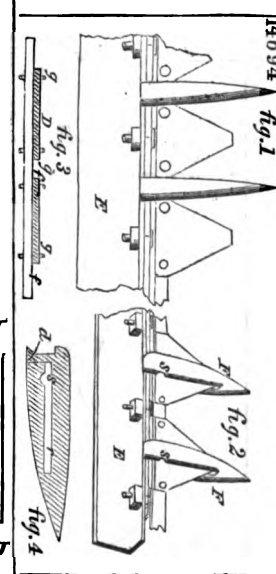

Digitized by Google

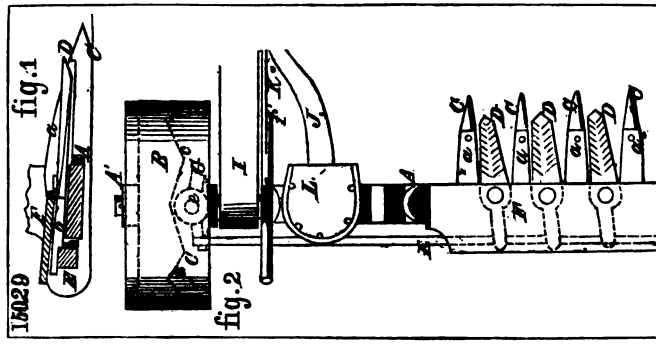

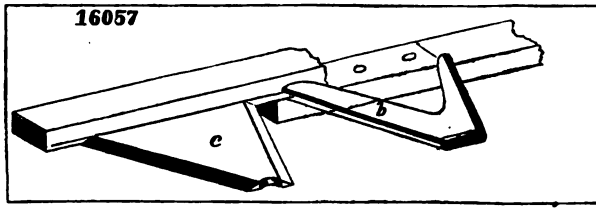

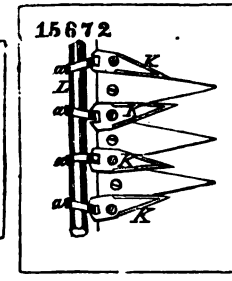

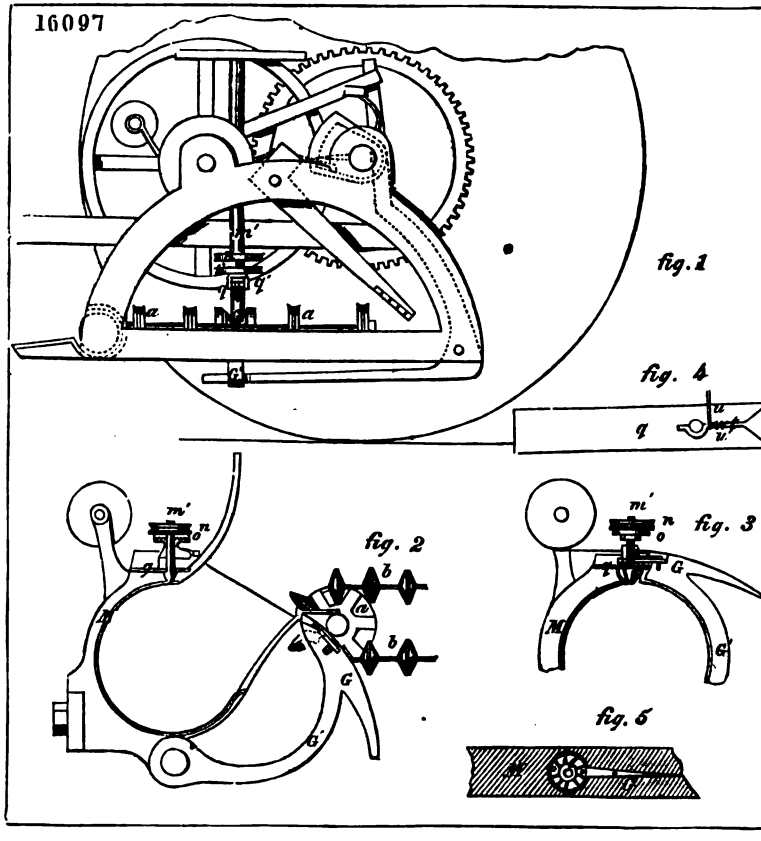

Digitized by Google

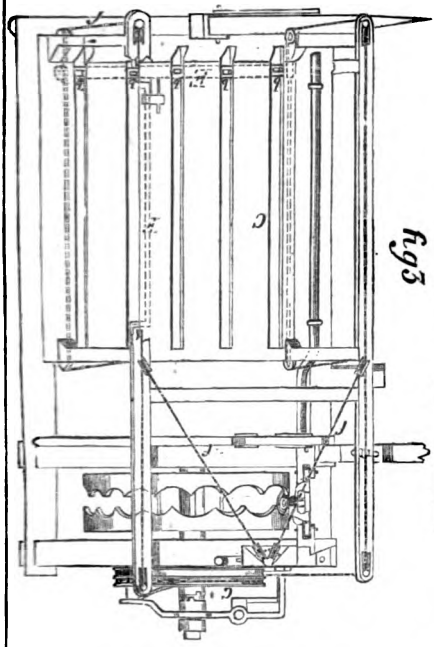

fig 3

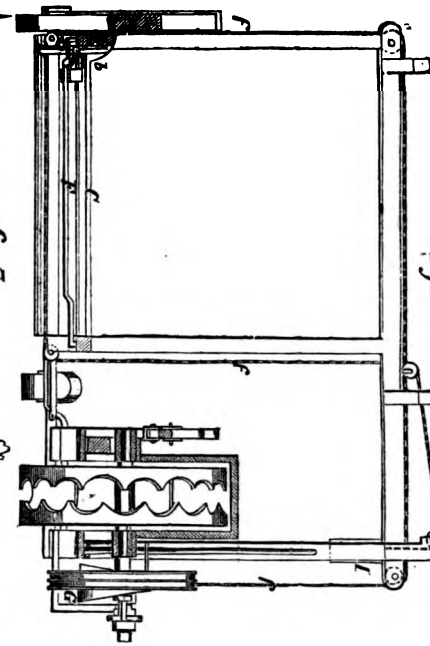

14183

fig 2

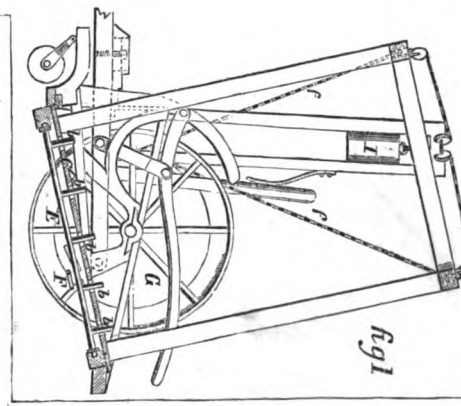

fig 1

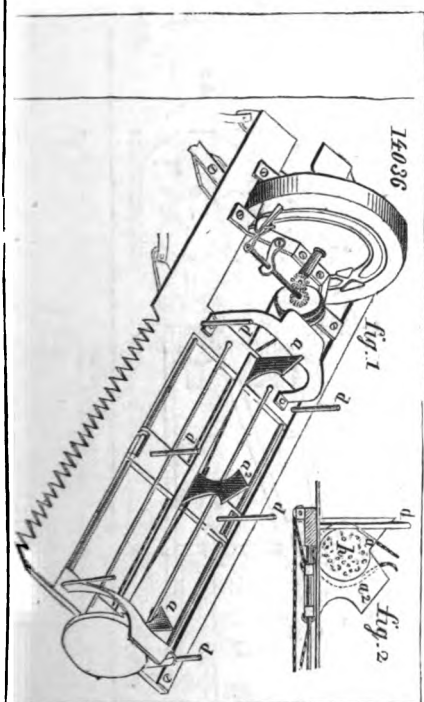

14036

fig. 1

fig. 2

15659

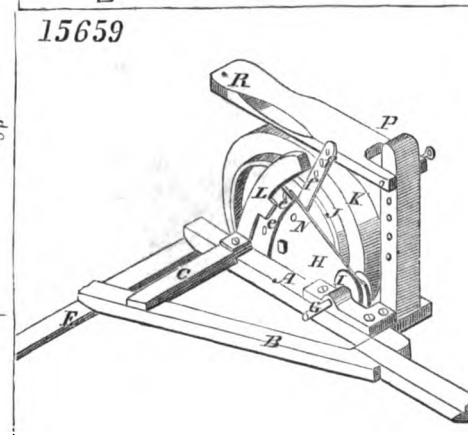

Digitized by Google

14769

fig 1

fig 2

14076

fig 1

fig 2

fig 3

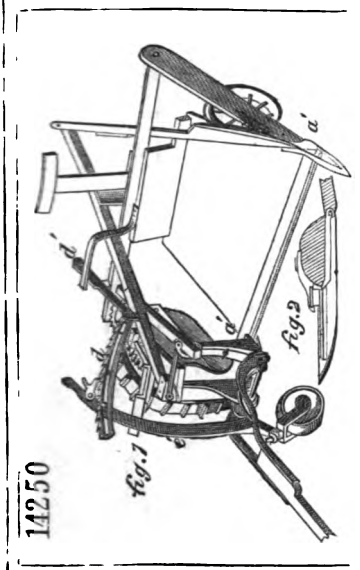

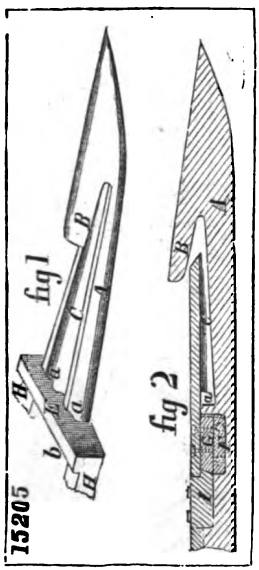

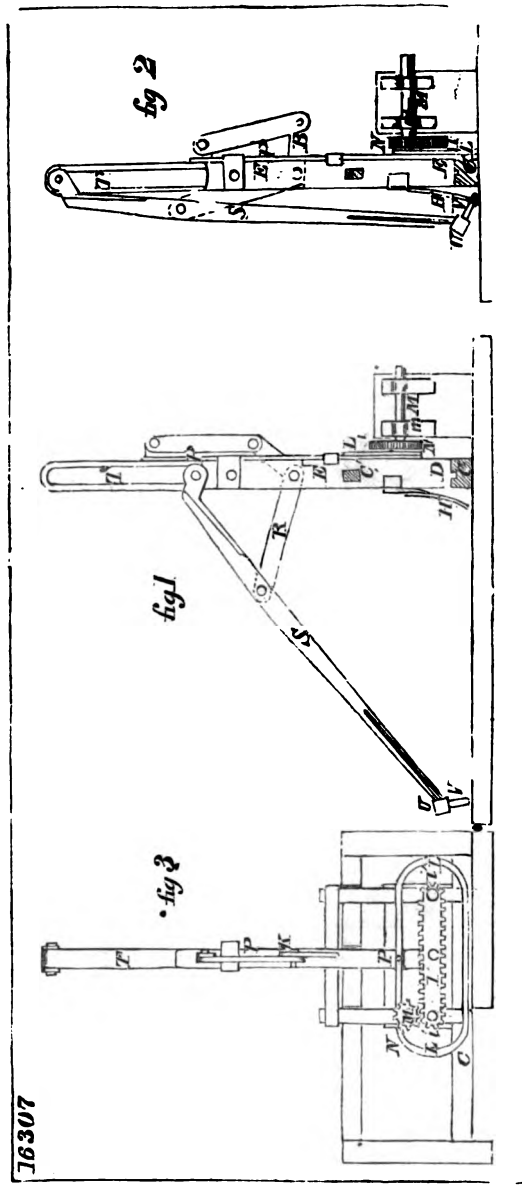

Digitized by Google

14730

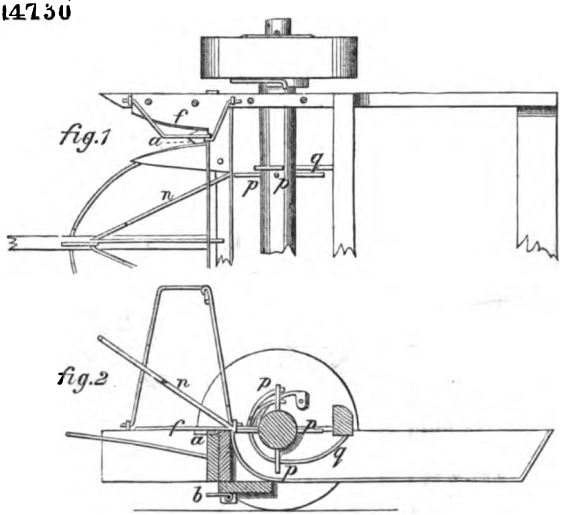

15533

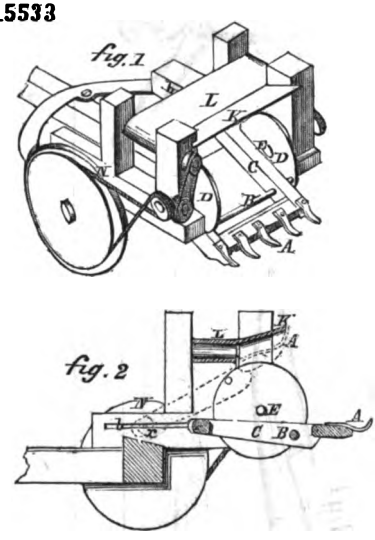

15677

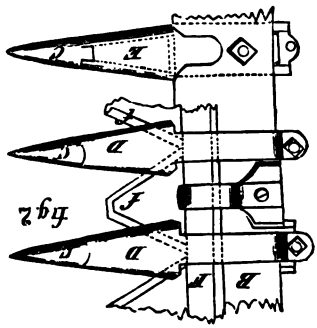

15409

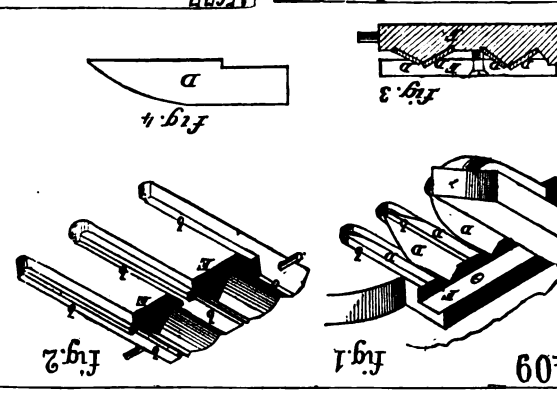

Digitized by Google

16134

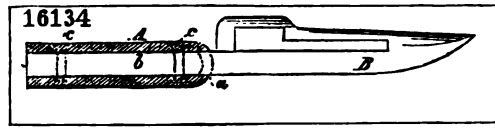

15152

fig 1

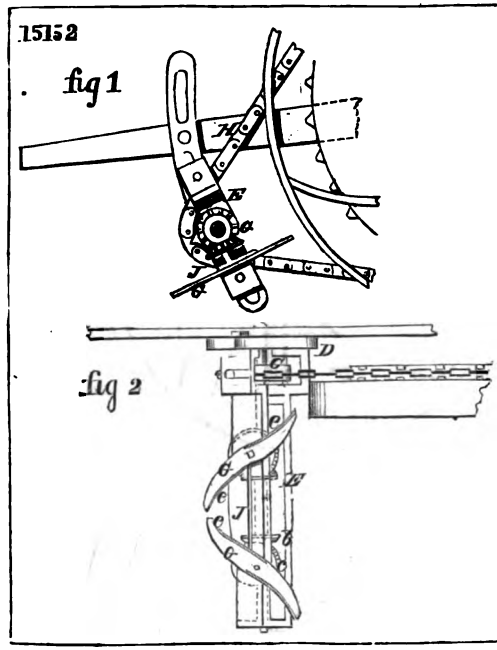

fig 2

14761

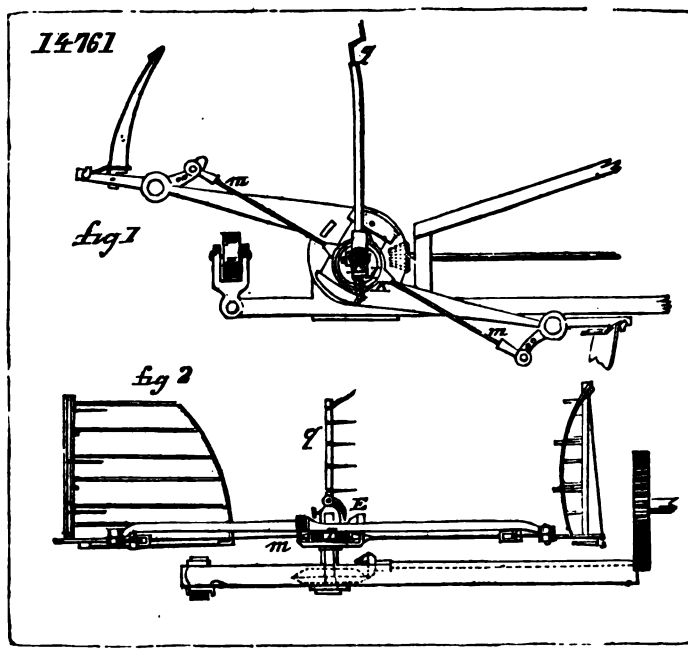

fig 1

fig 2

Digitized by Google

14266

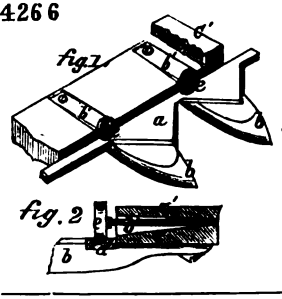

14441

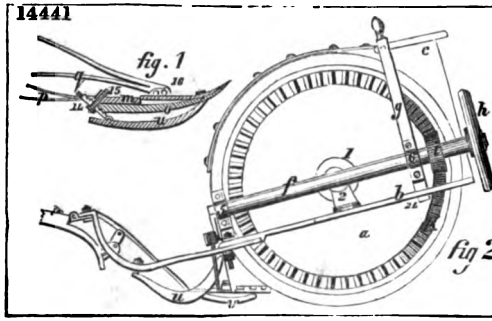

14127

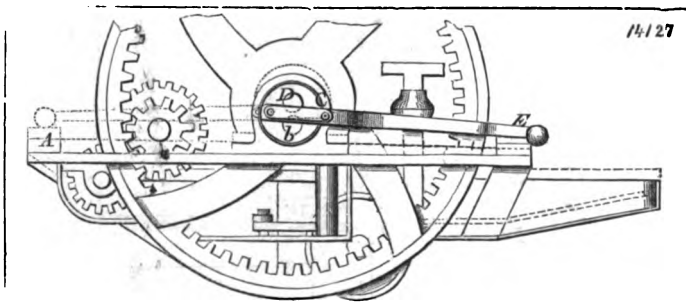

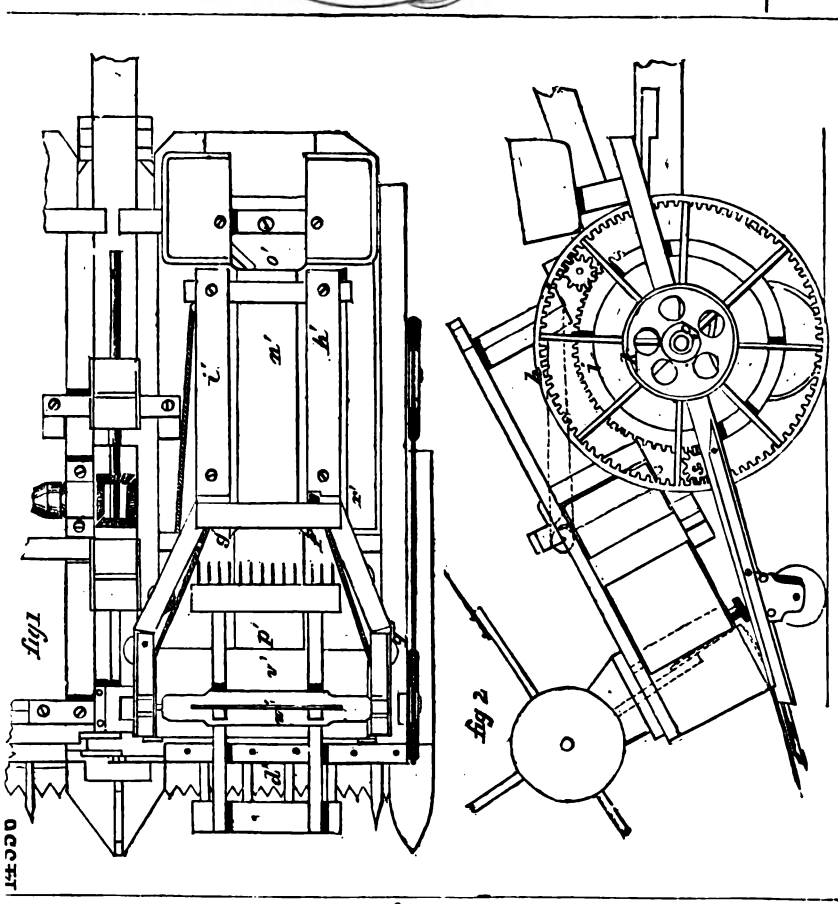

Digitized by Google

14582

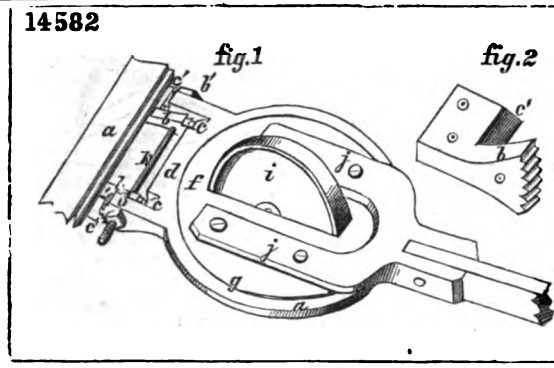

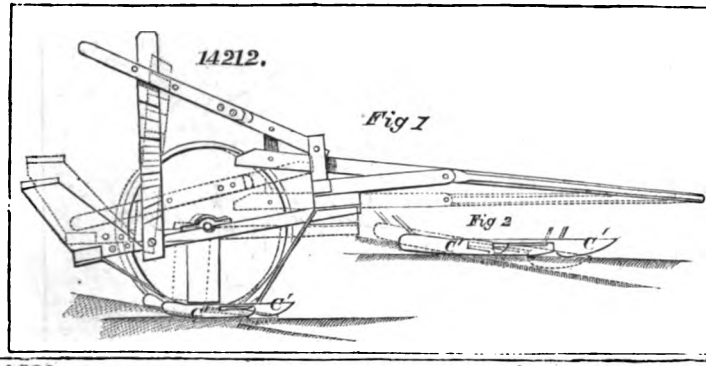

14980

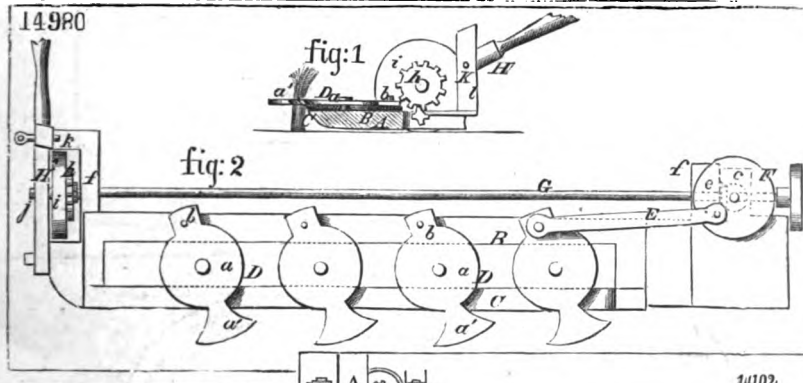

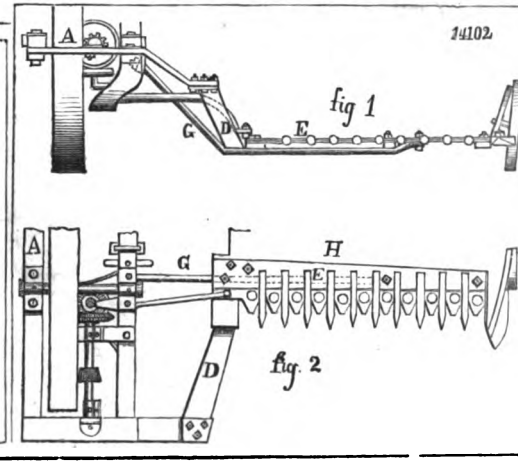

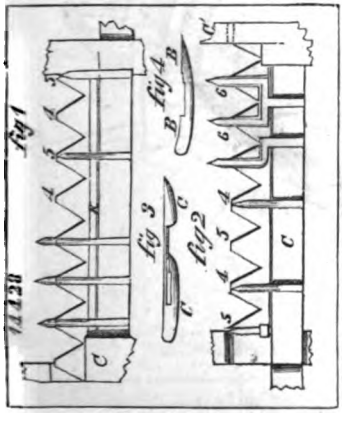

Digitized by Google

14148

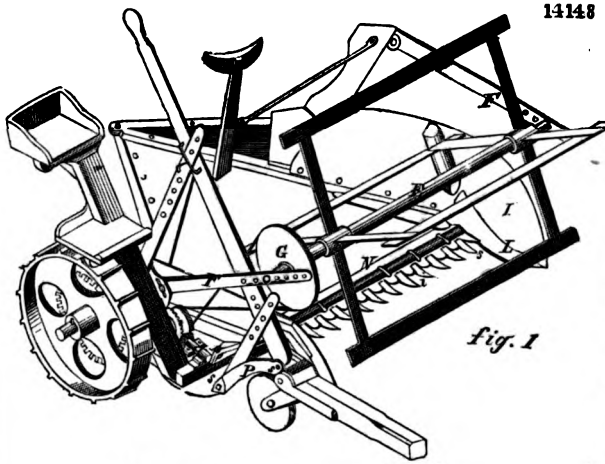

fig. 1

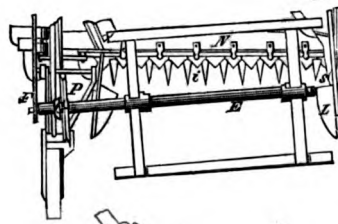

fig. 2

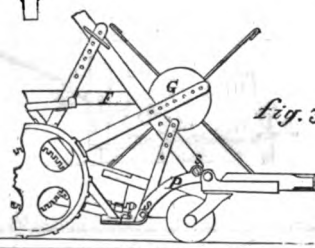

fig. 3

14448

fig 1

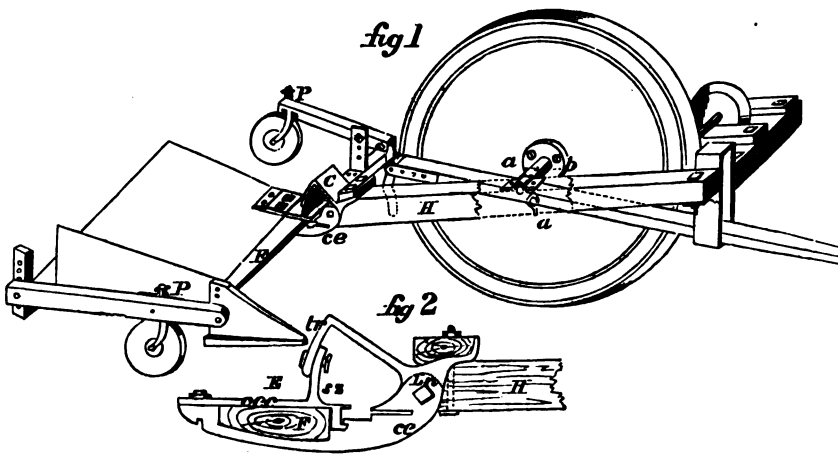

fig 2

Digitized by Google

14661

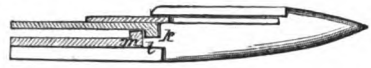

14541

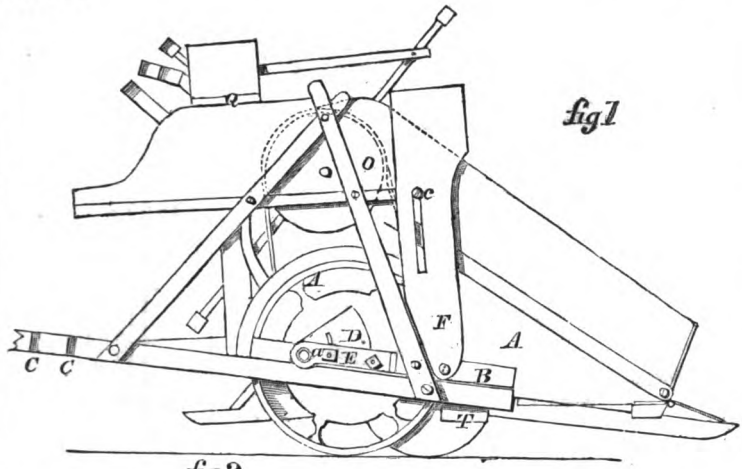

14409

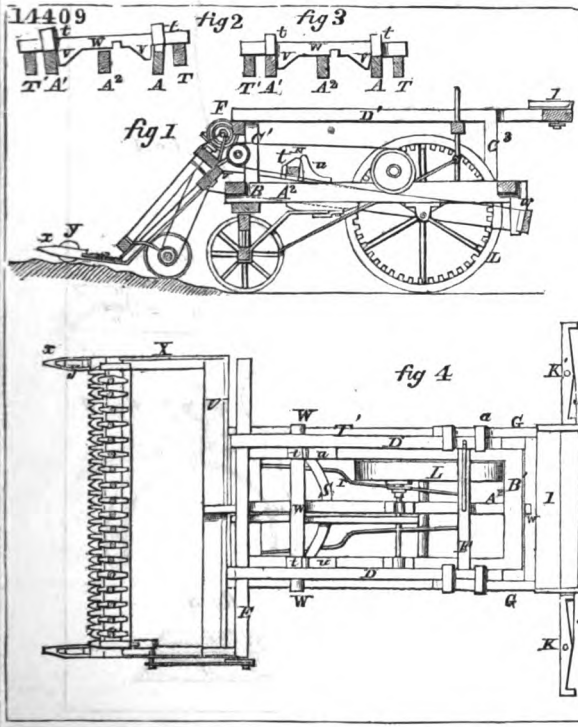

14694

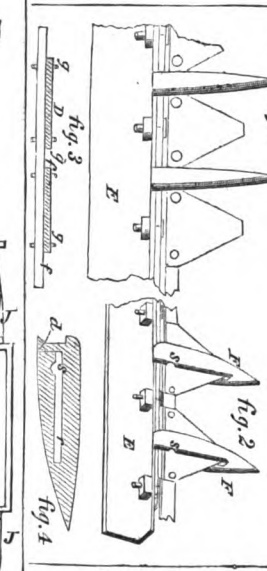

Digitized by Google

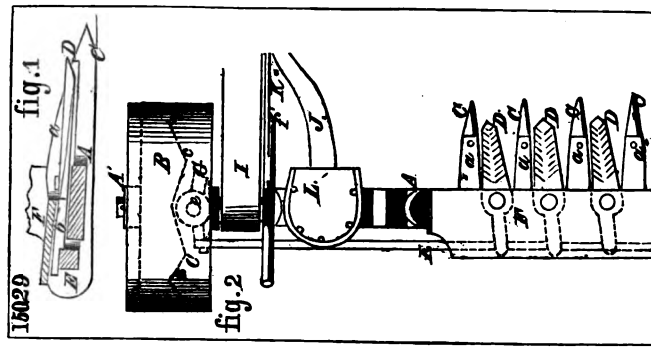

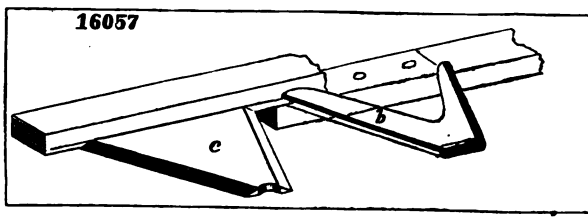

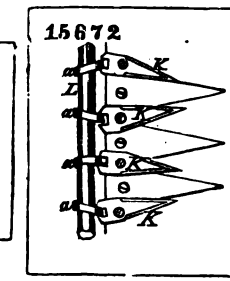

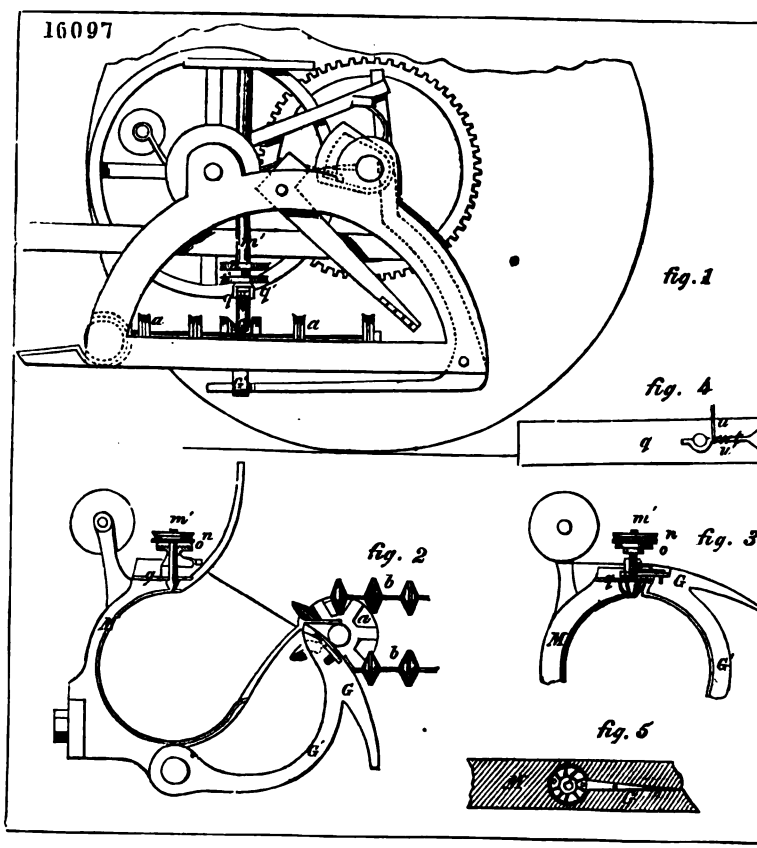

Digitized by Google

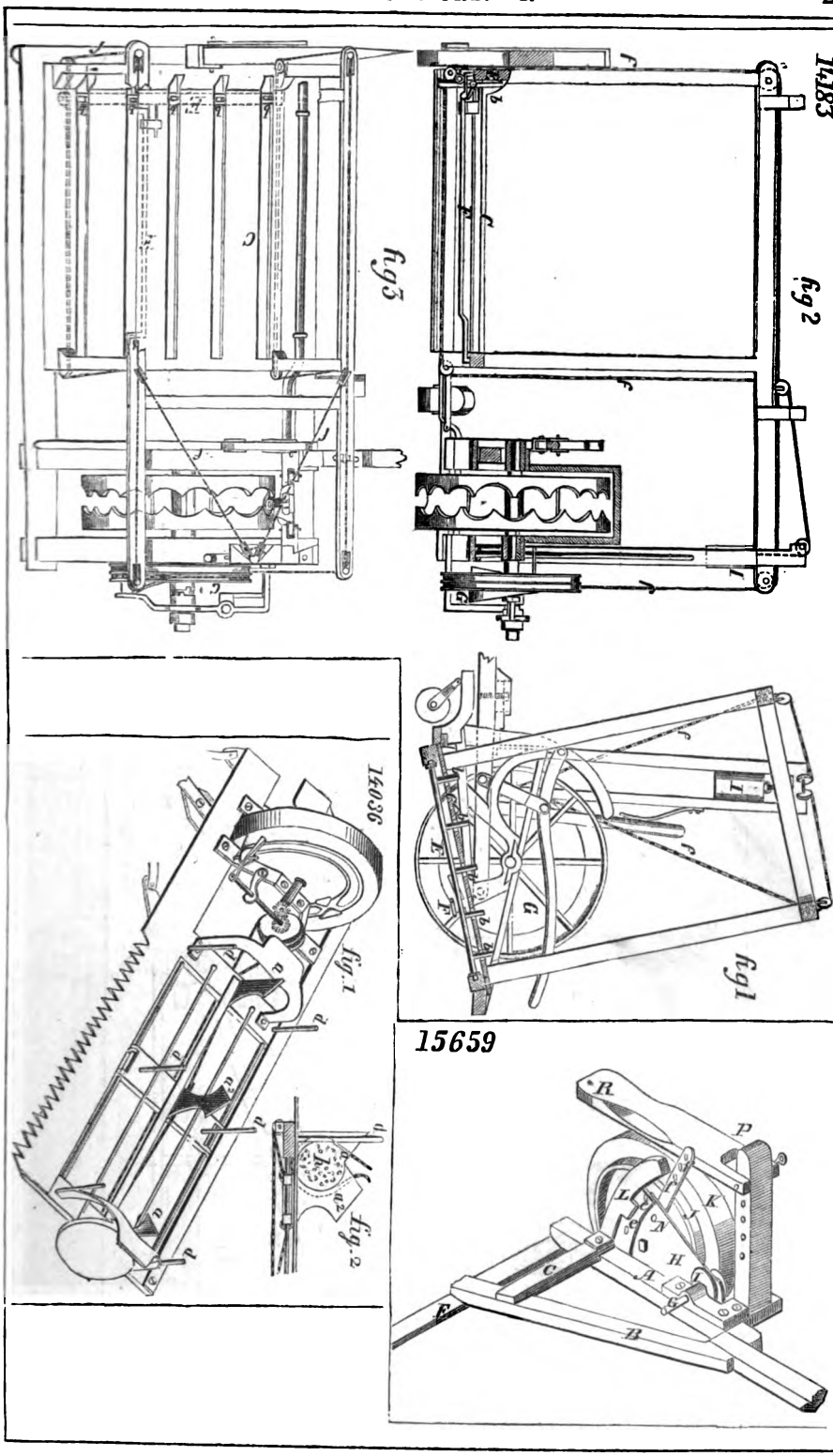

Digitized by Google

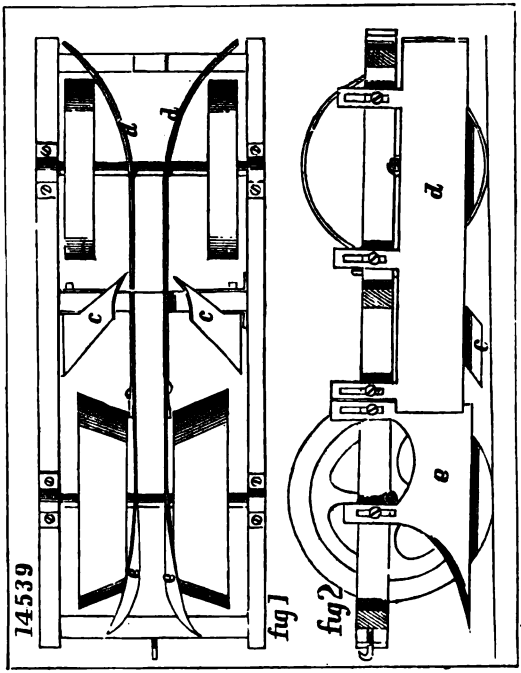

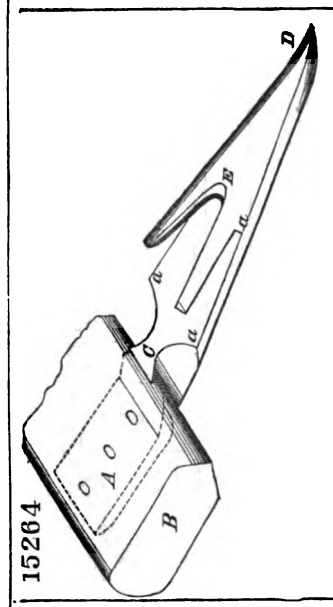

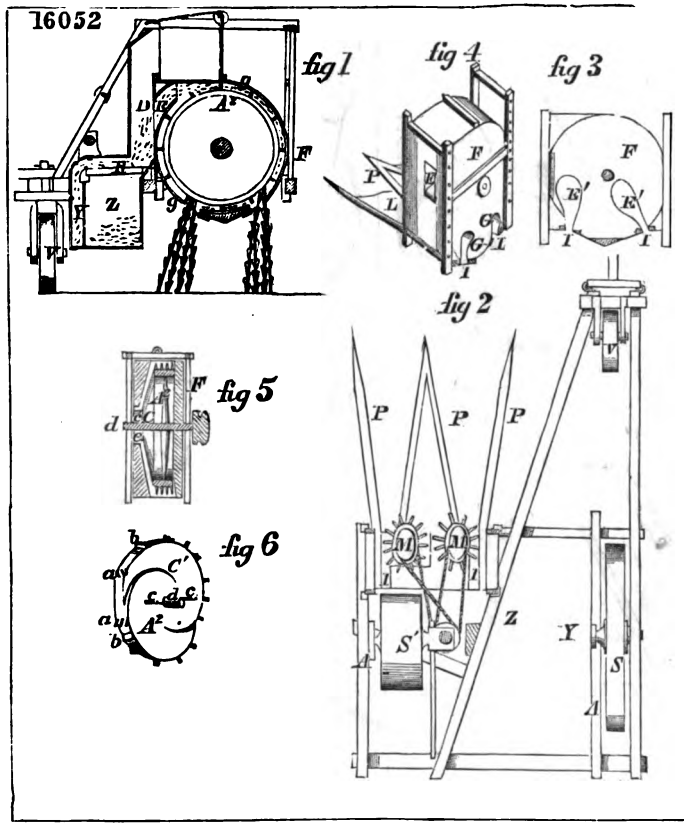

Digitized by Google

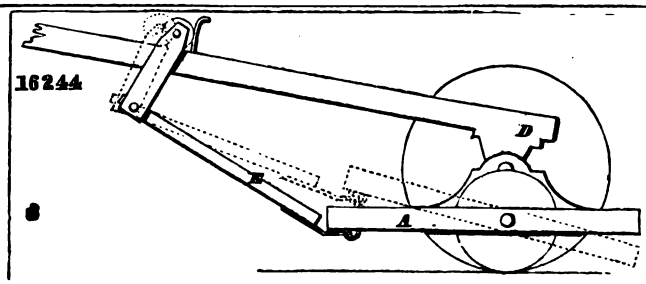

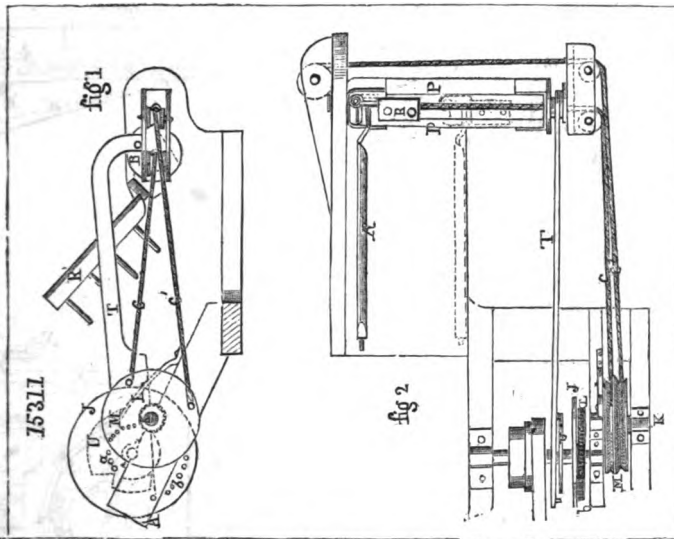

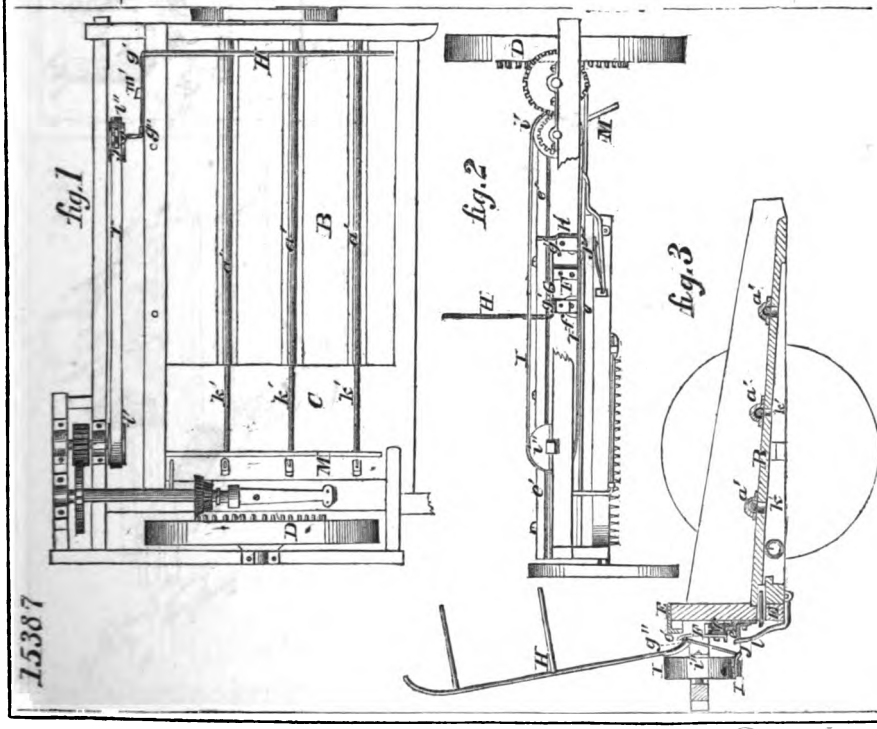

Digitized by Google

14730

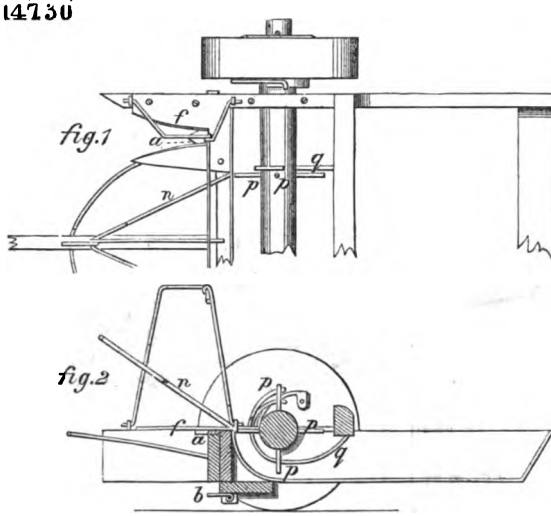

15533

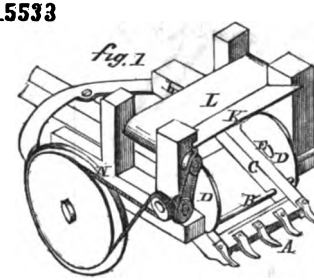

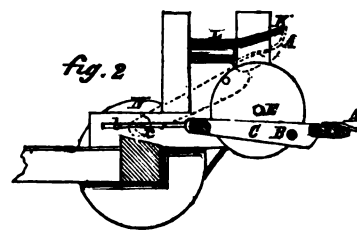

15617

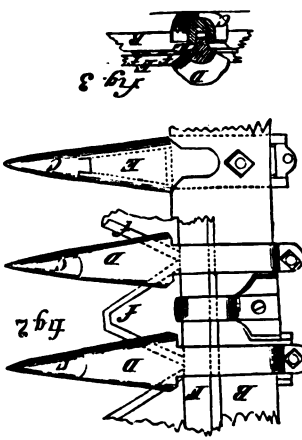

15409

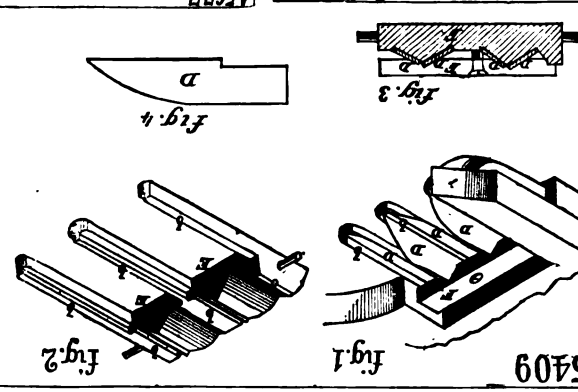

Digitized by Google

16134

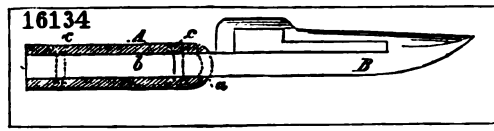

15152

fig 1

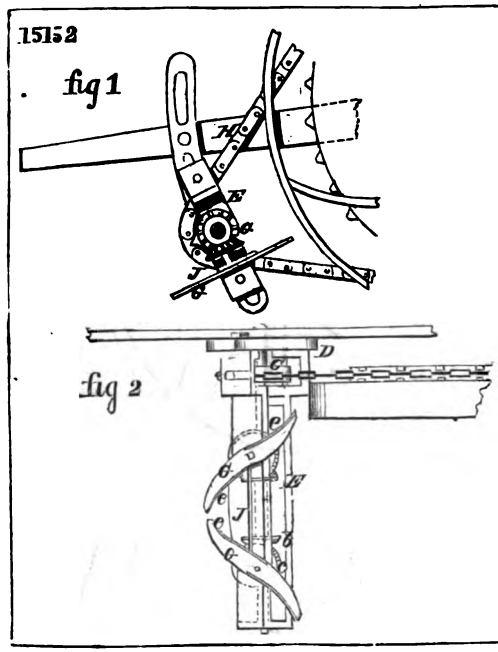

fig 2

14761

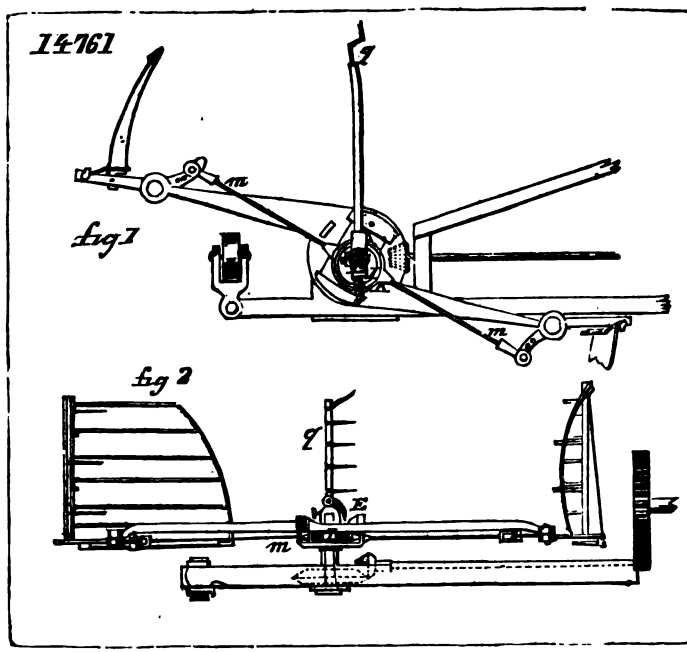

fig 1

fig 2

Digitized by Google

14266

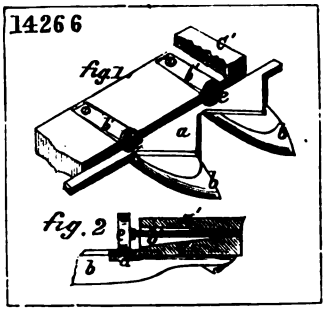

14441

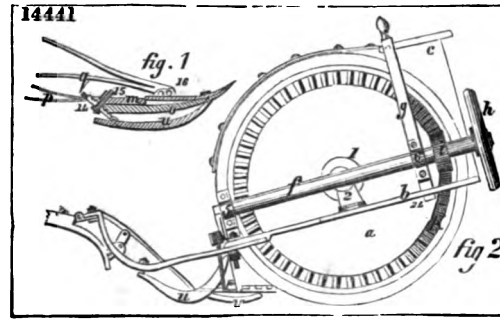

14127

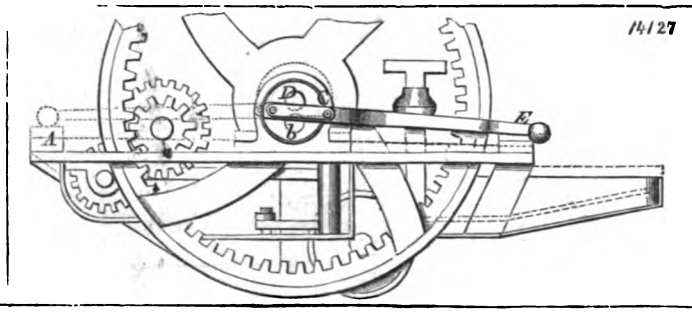

14556

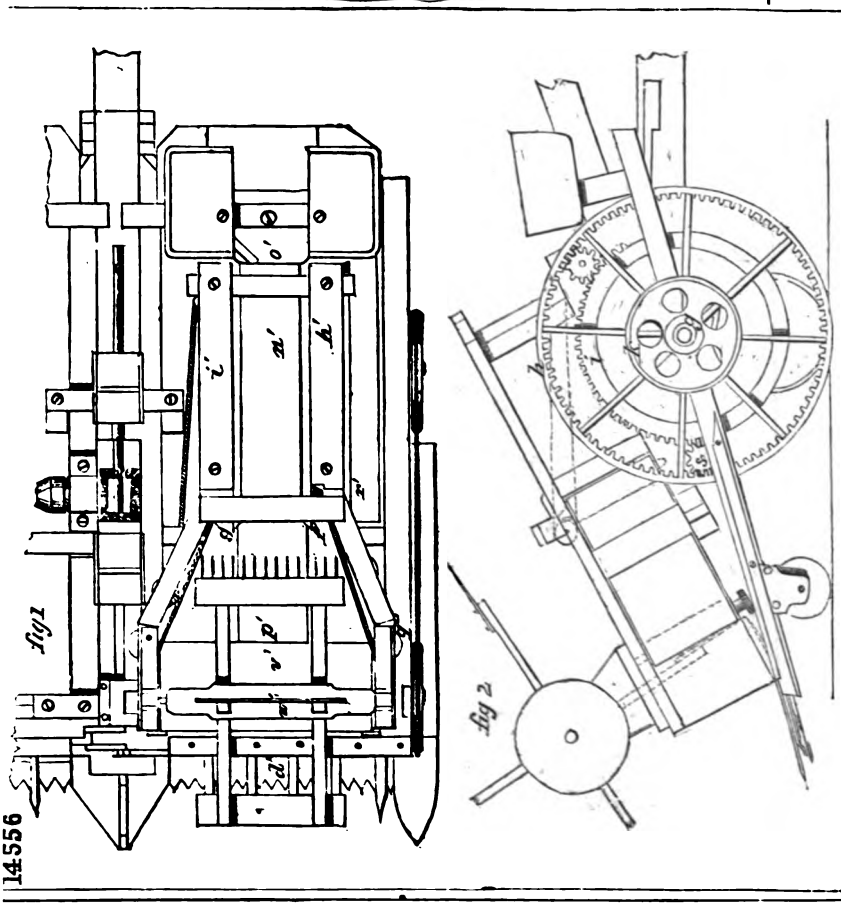

Digitized by Google

14582

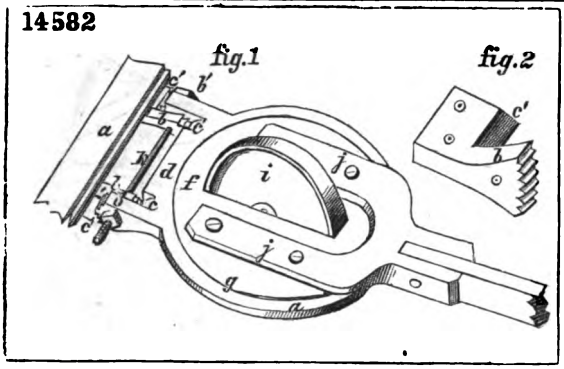

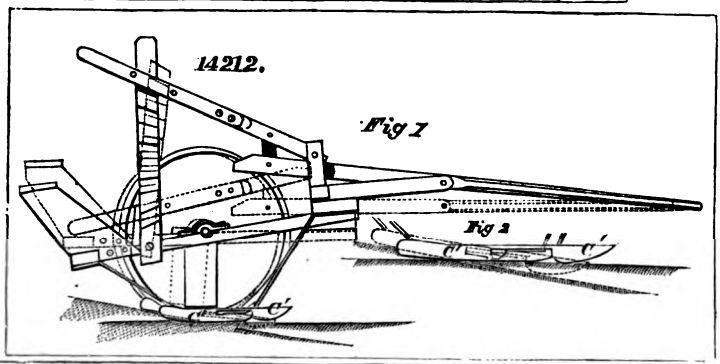

14980

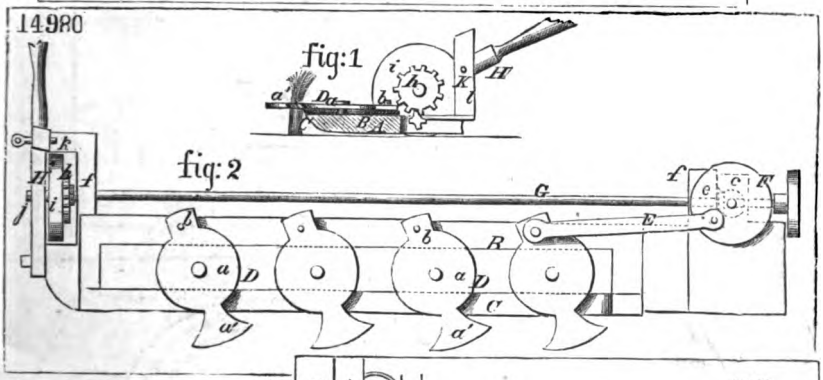

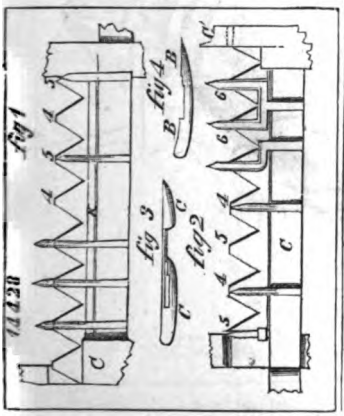

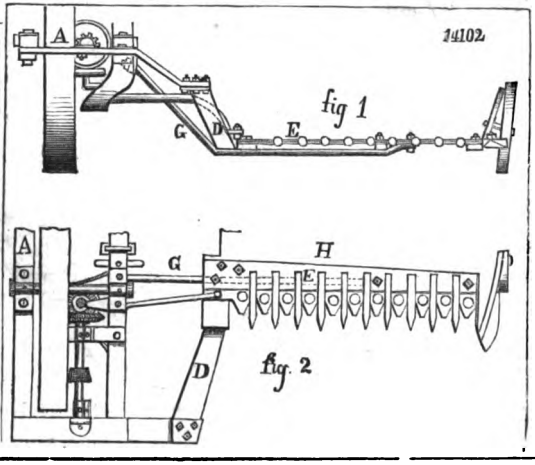

Digitized by Google

14148

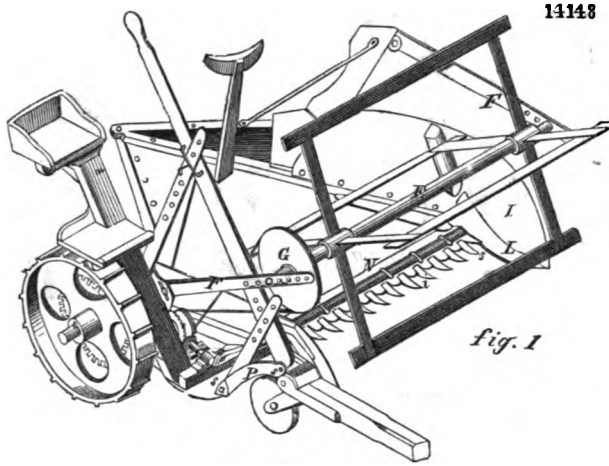

fig. 1

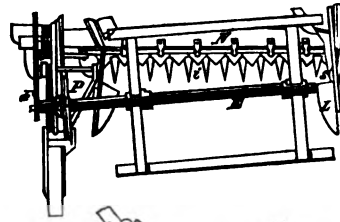

fig. 2

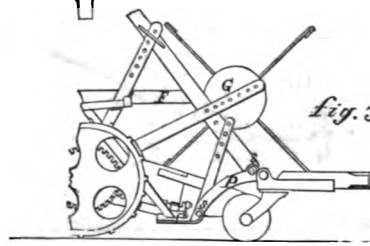

fig. 3

14448

fig 1

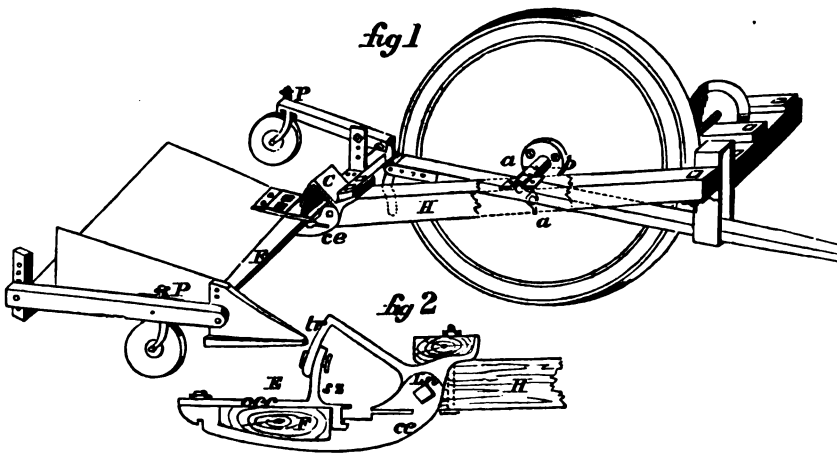

fig 2

Digitized by Google

14661

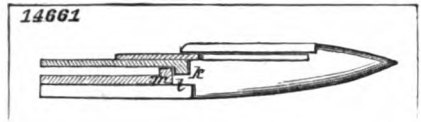

14541

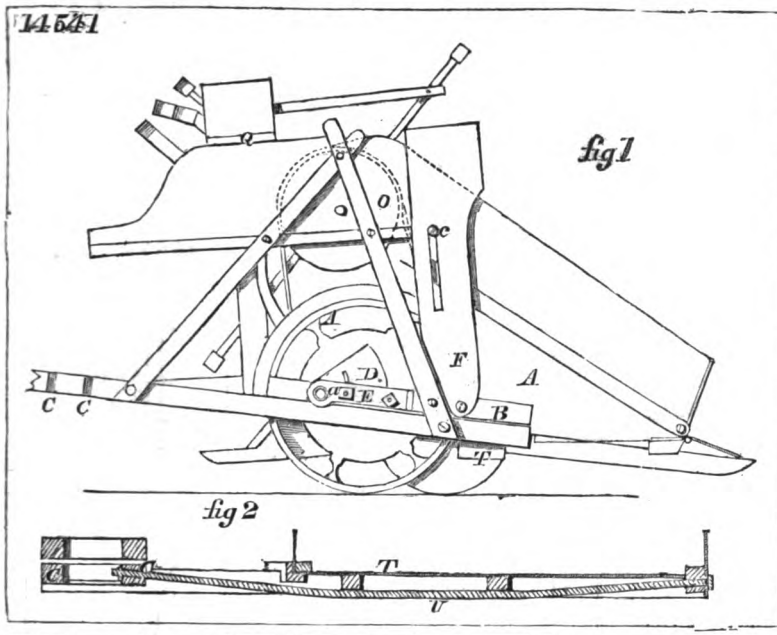

14409

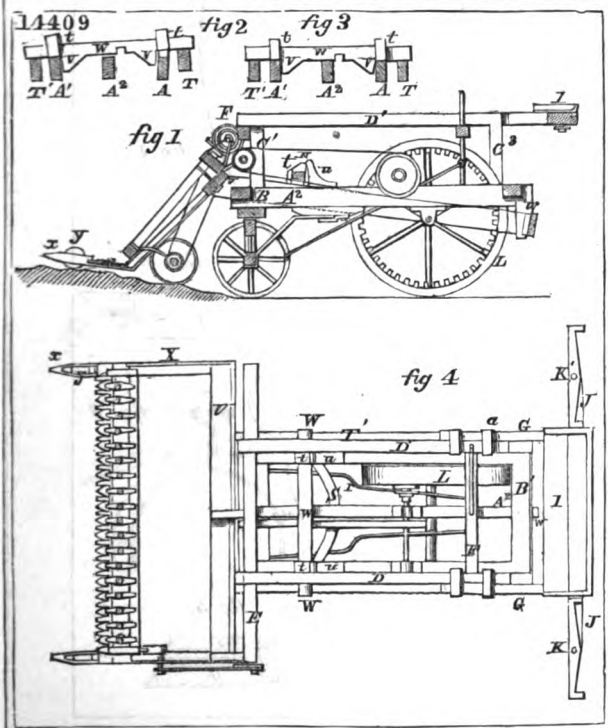

14694

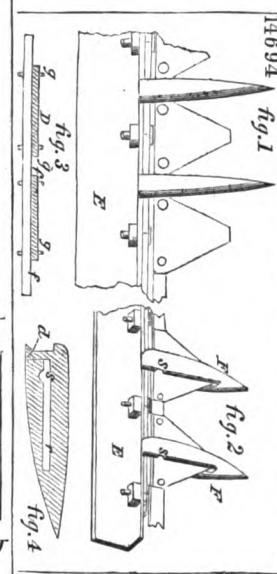

Digitized by Google

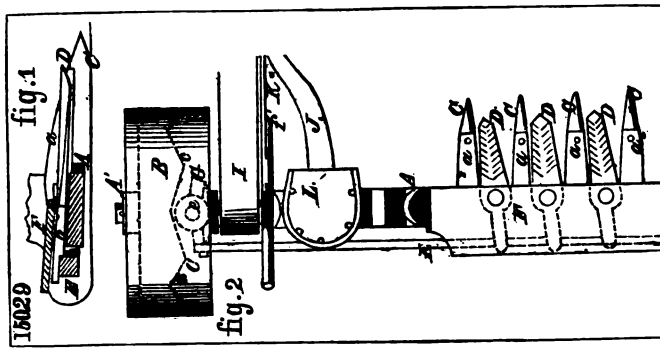

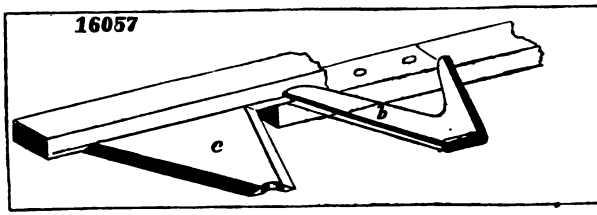

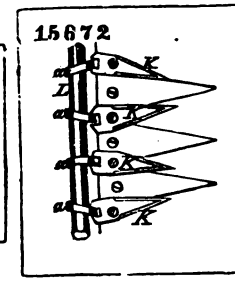

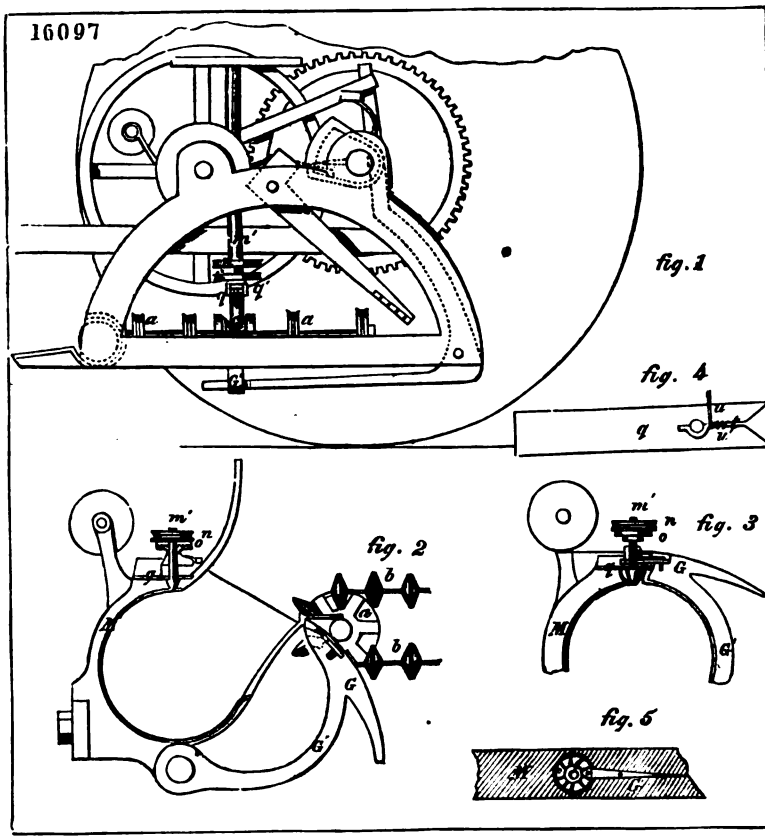

Digitized by Google

14183

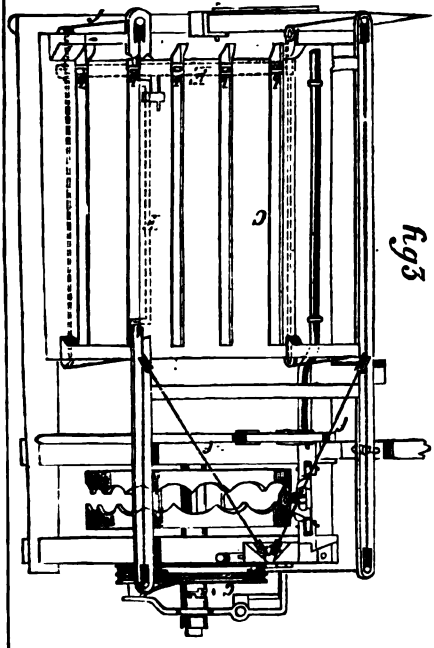

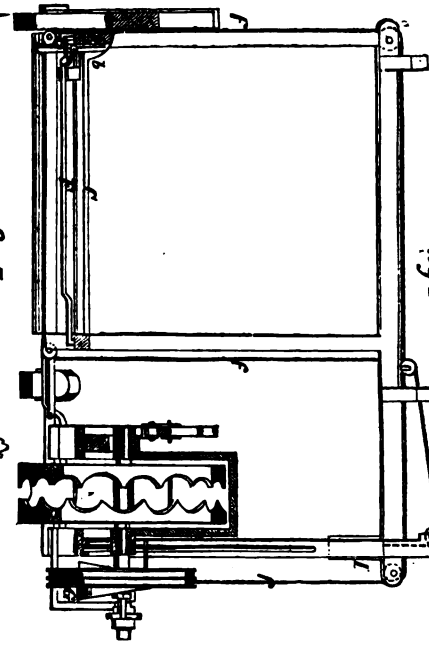

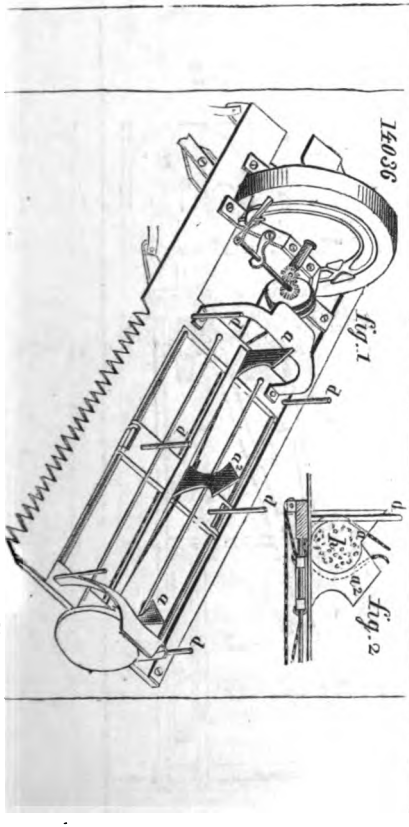

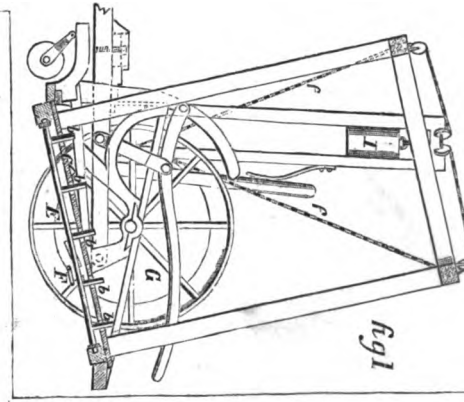

15659

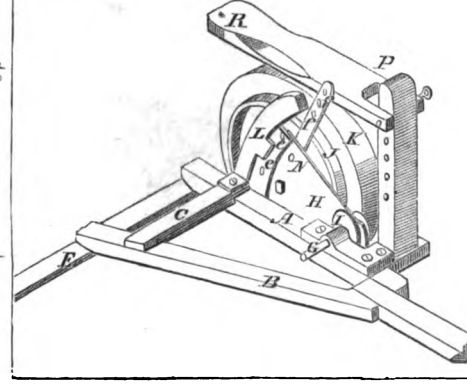

Digitized by Google

14539

fig 1

fig 2

15264

16052

fig 1

fig 4

fig 3

fig 2

fig 5

fig 6

Digitized by Google

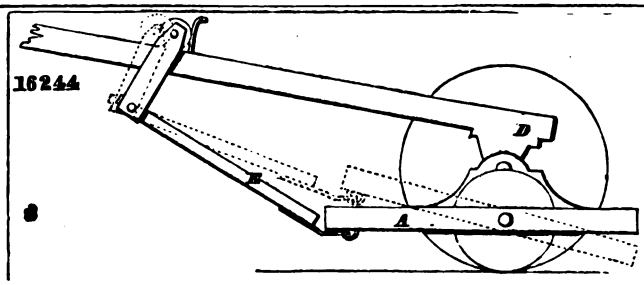

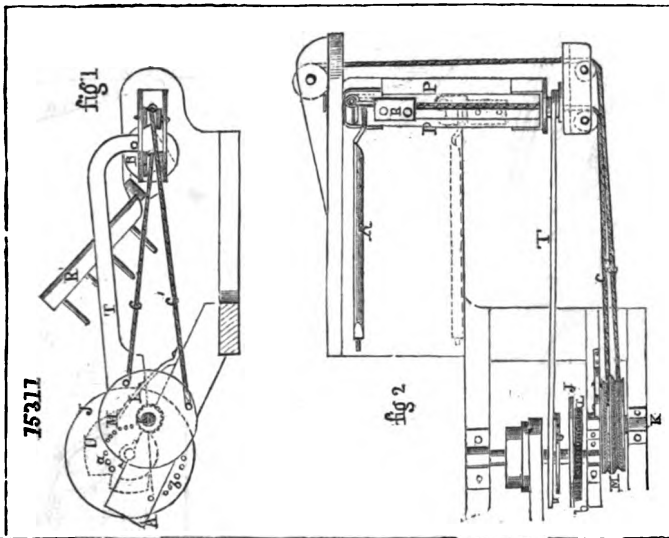

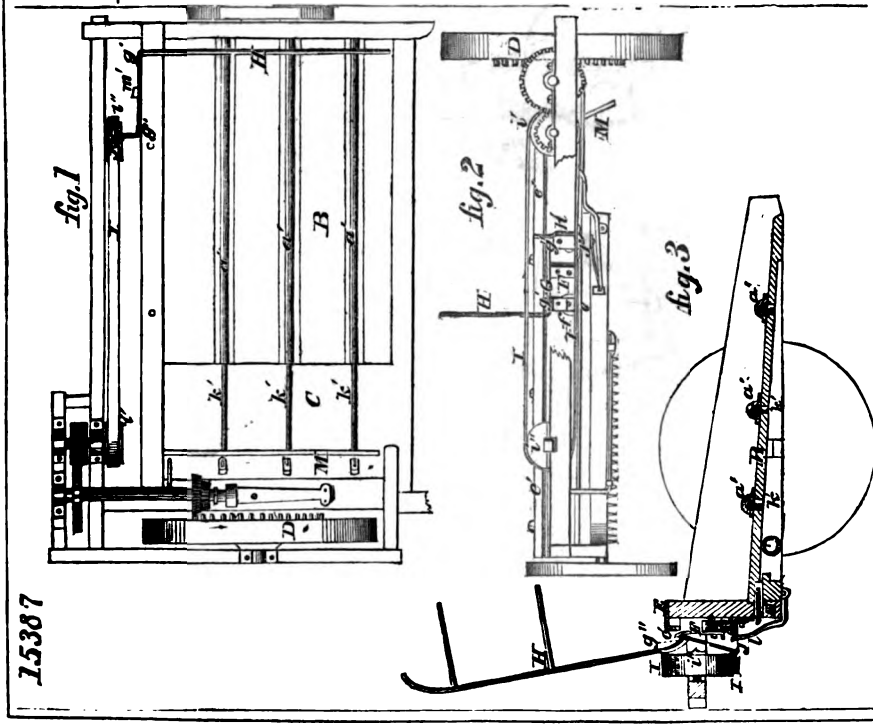

Digitized by Google

14861

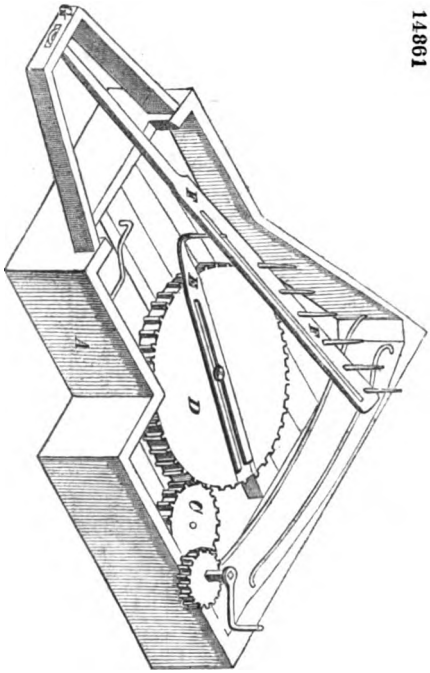

15751

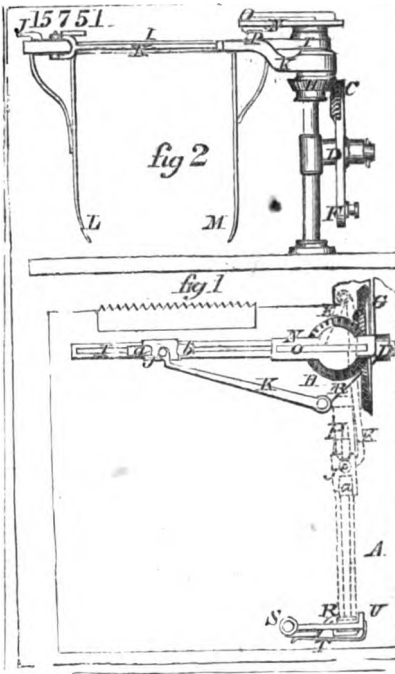

15748

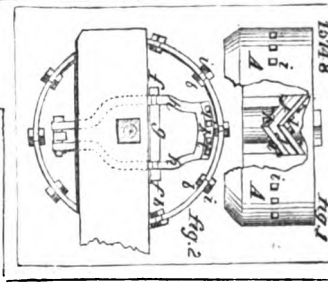

16131

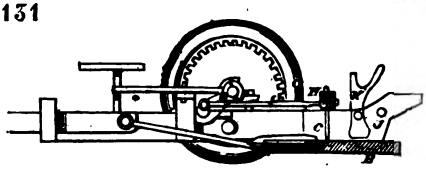

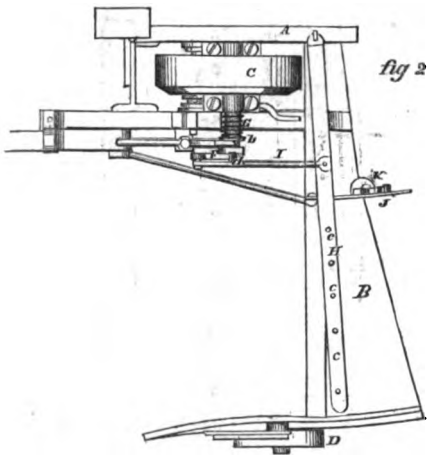

15669

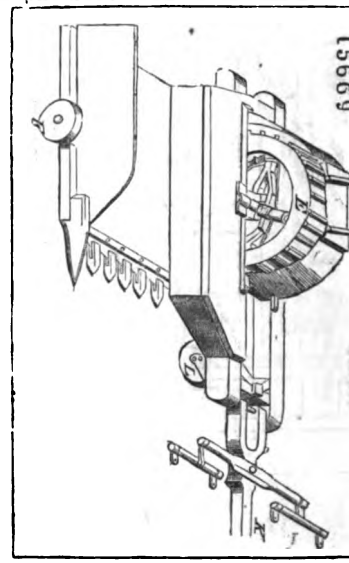

Digitized by Google

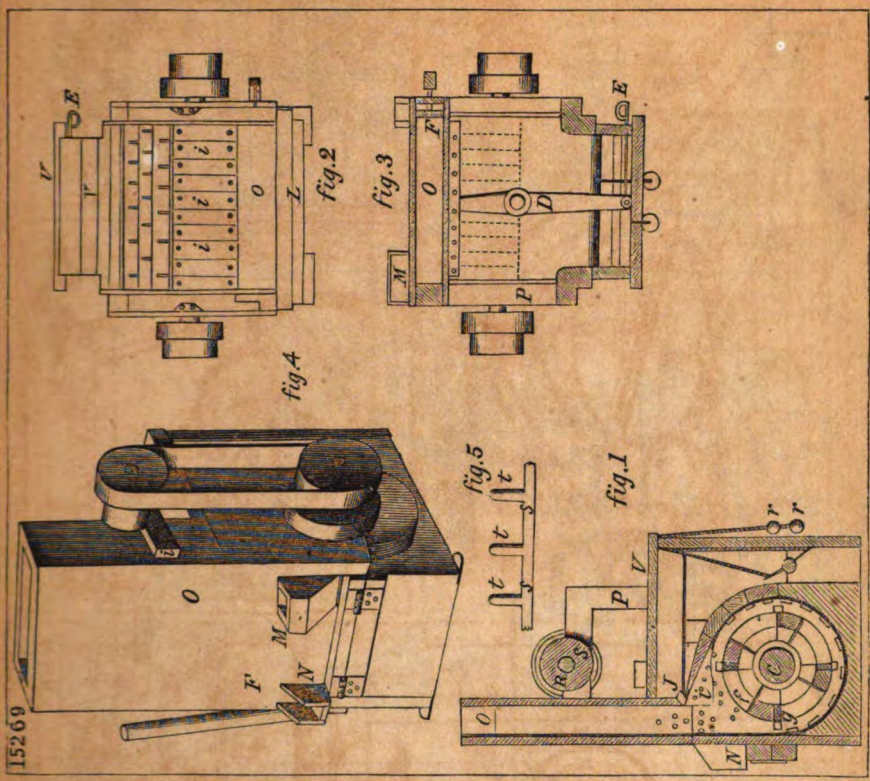

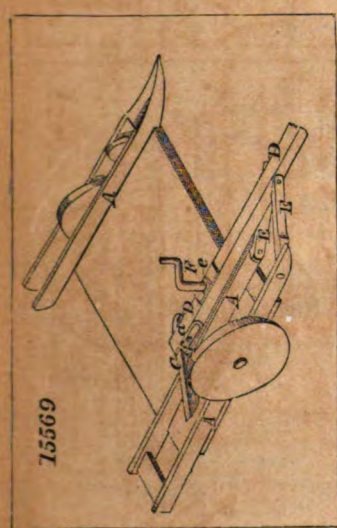

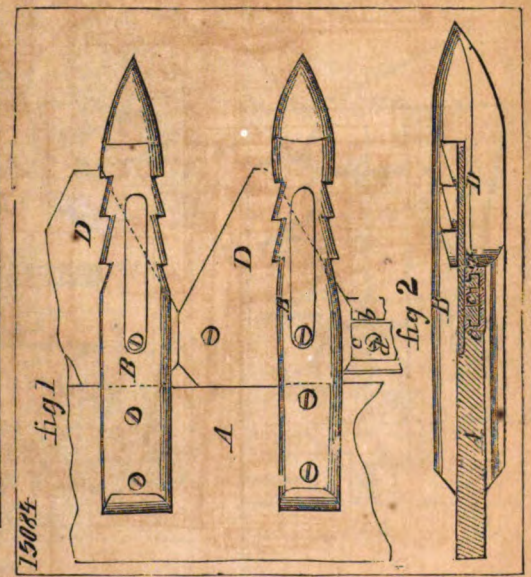

Digitized by Google

14266

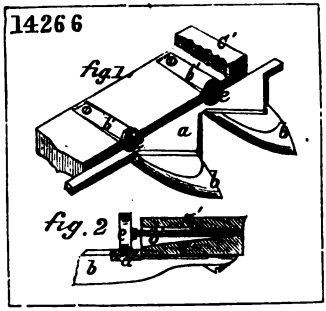

14441

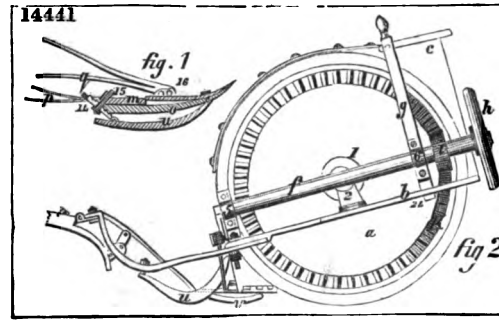

14127

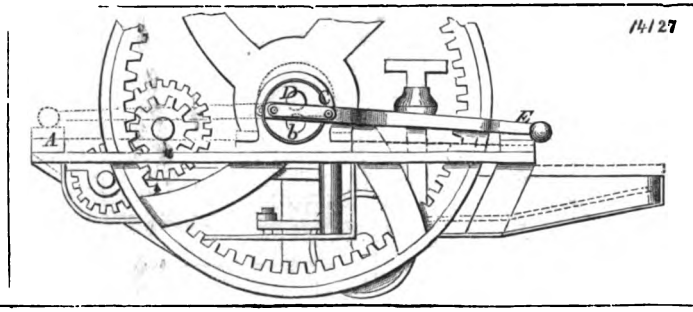

14556

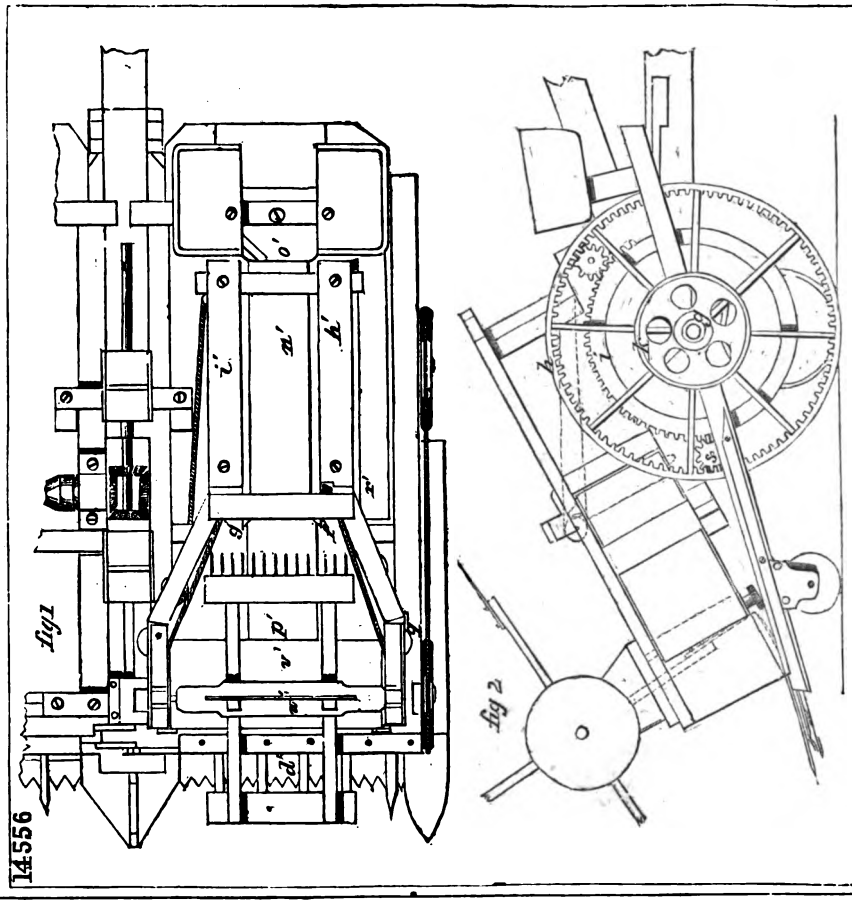

Digitized by Google

14582

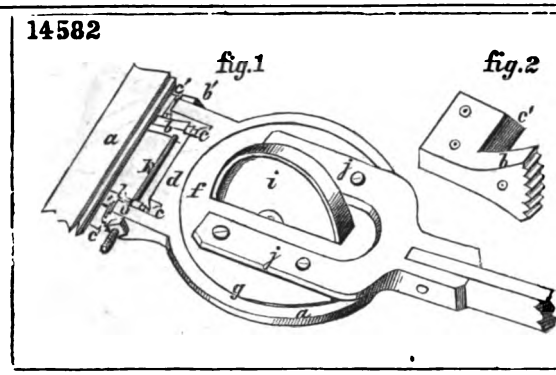

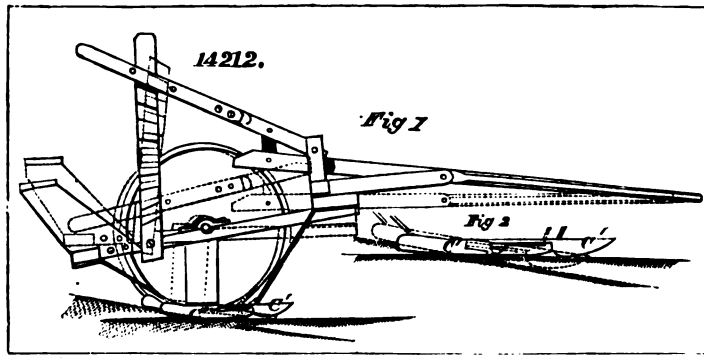

14980

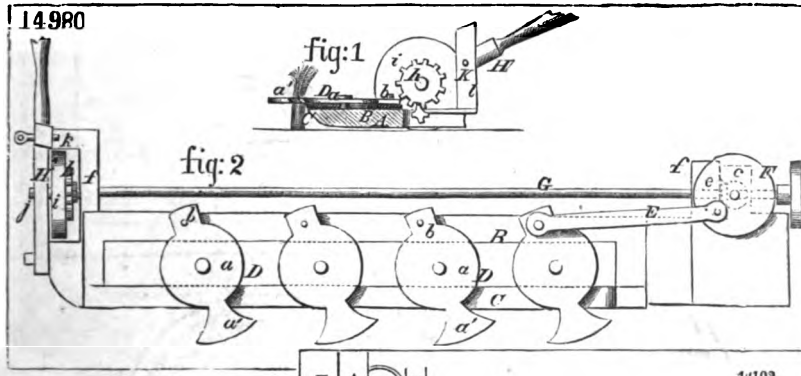

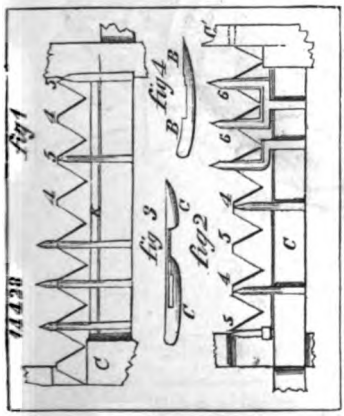

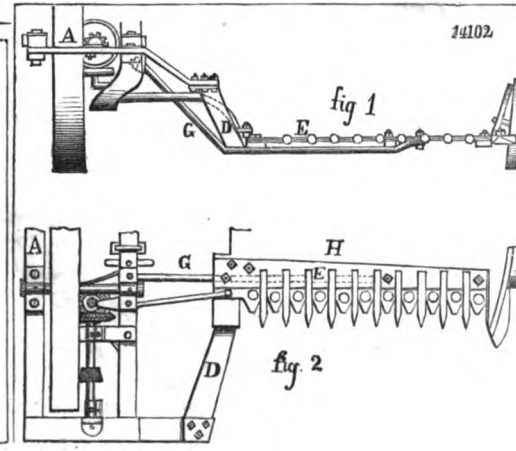

Digitized by Google

14143

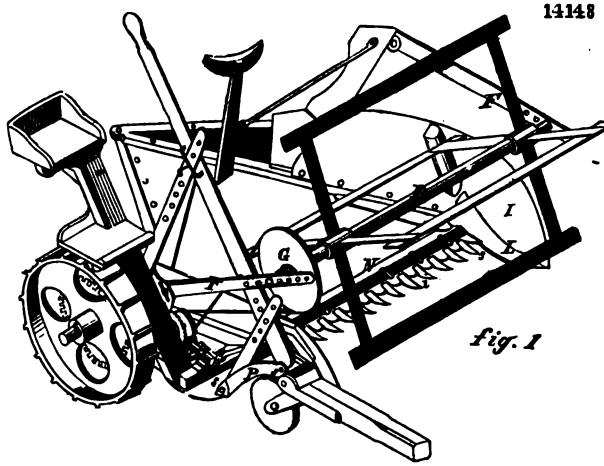

fig. 1

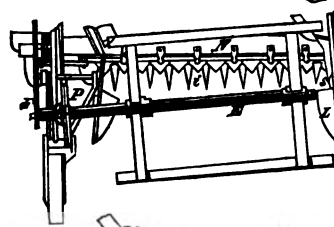

fig. 2

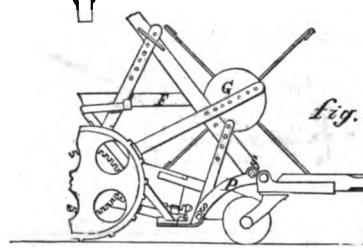

fig. 3

14448

fig 1

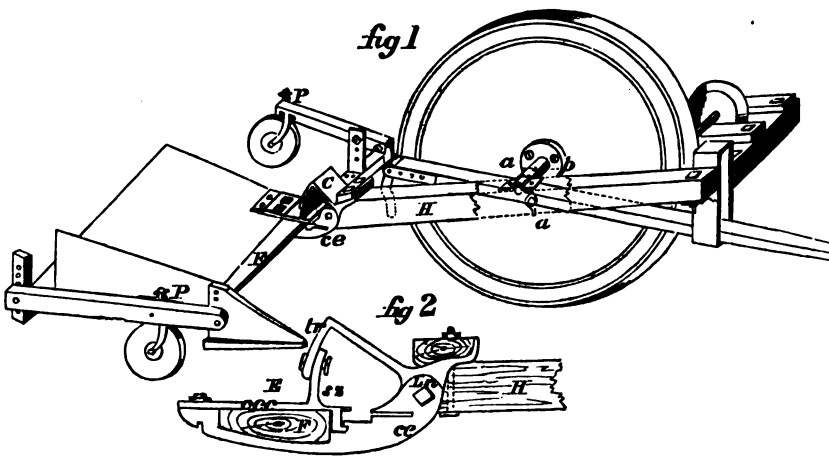

fig 2

Digitized by Google

14661

14541

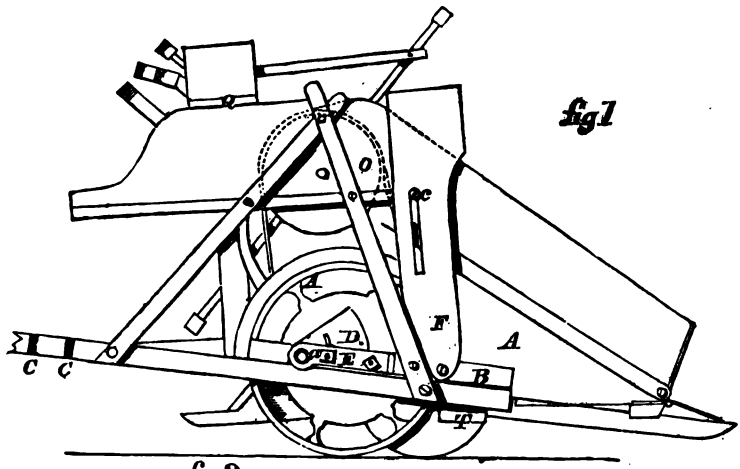

14409

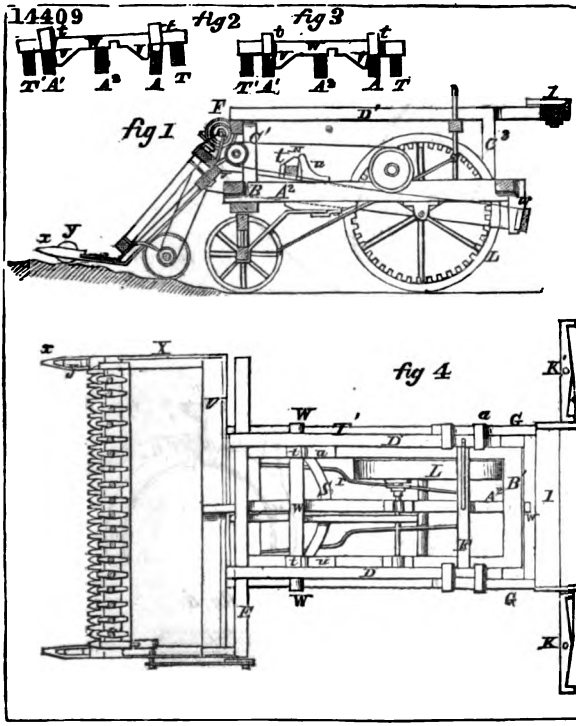

14694

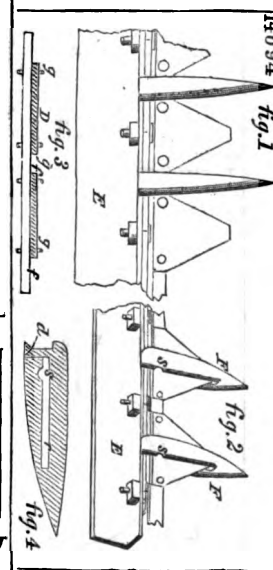

Digitized by Google

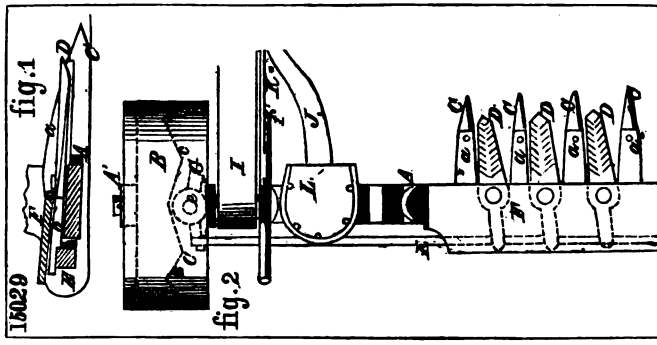

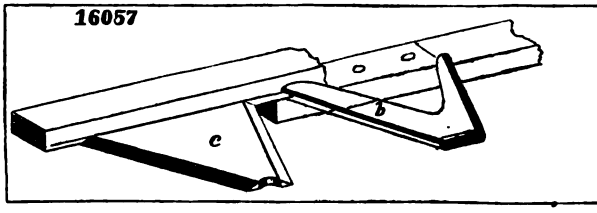

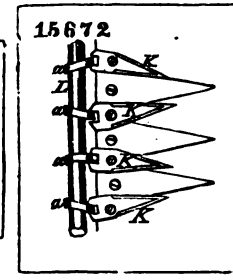

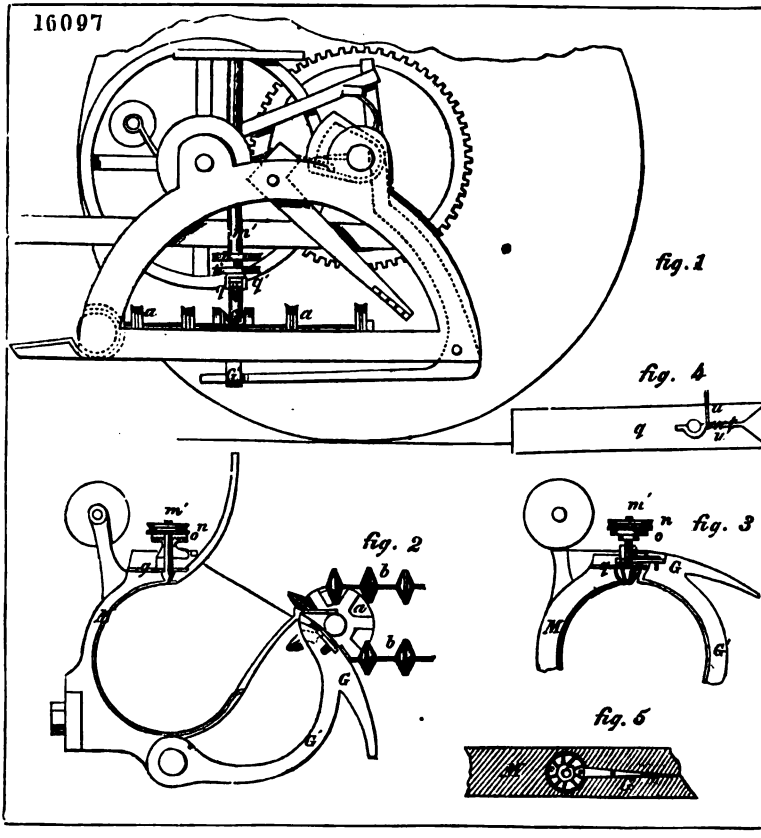

Digitized by Google

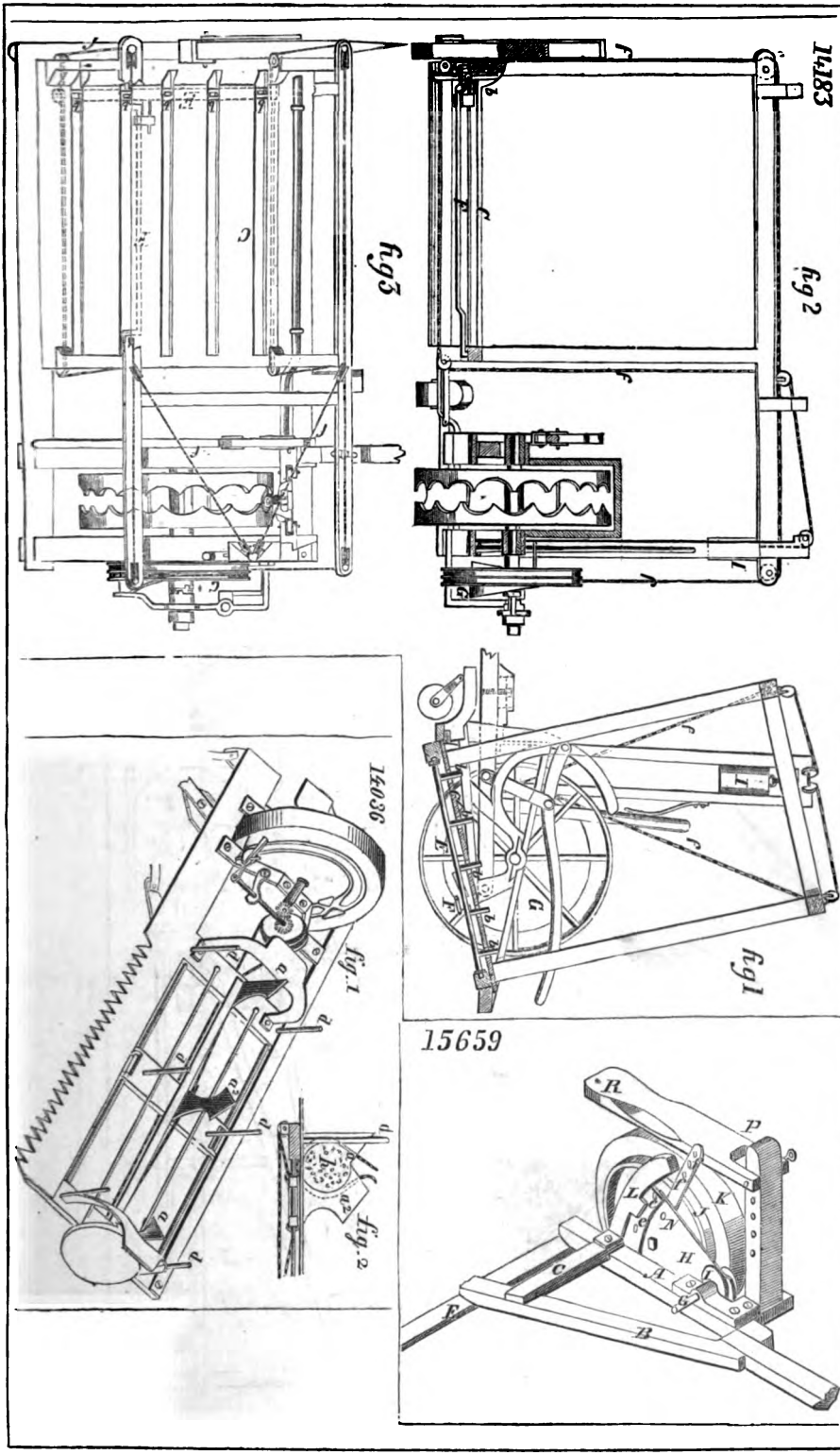

Digitized by Google

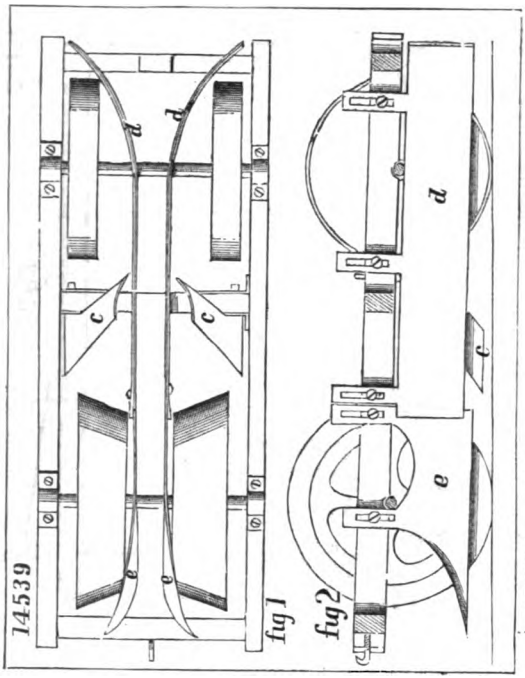

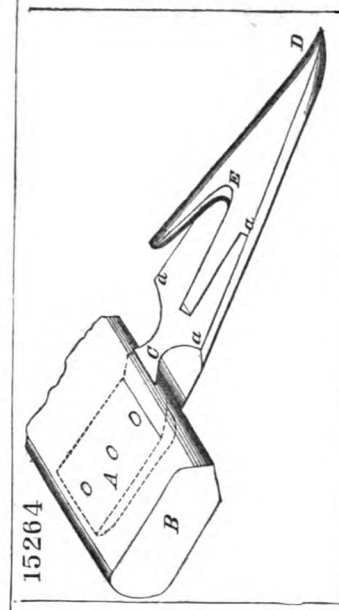

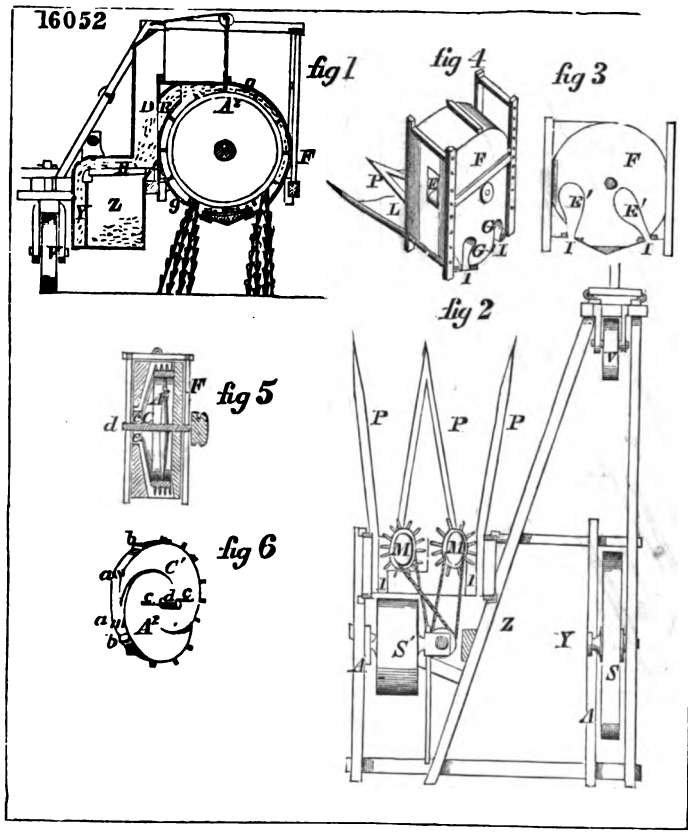

Digitized by Google

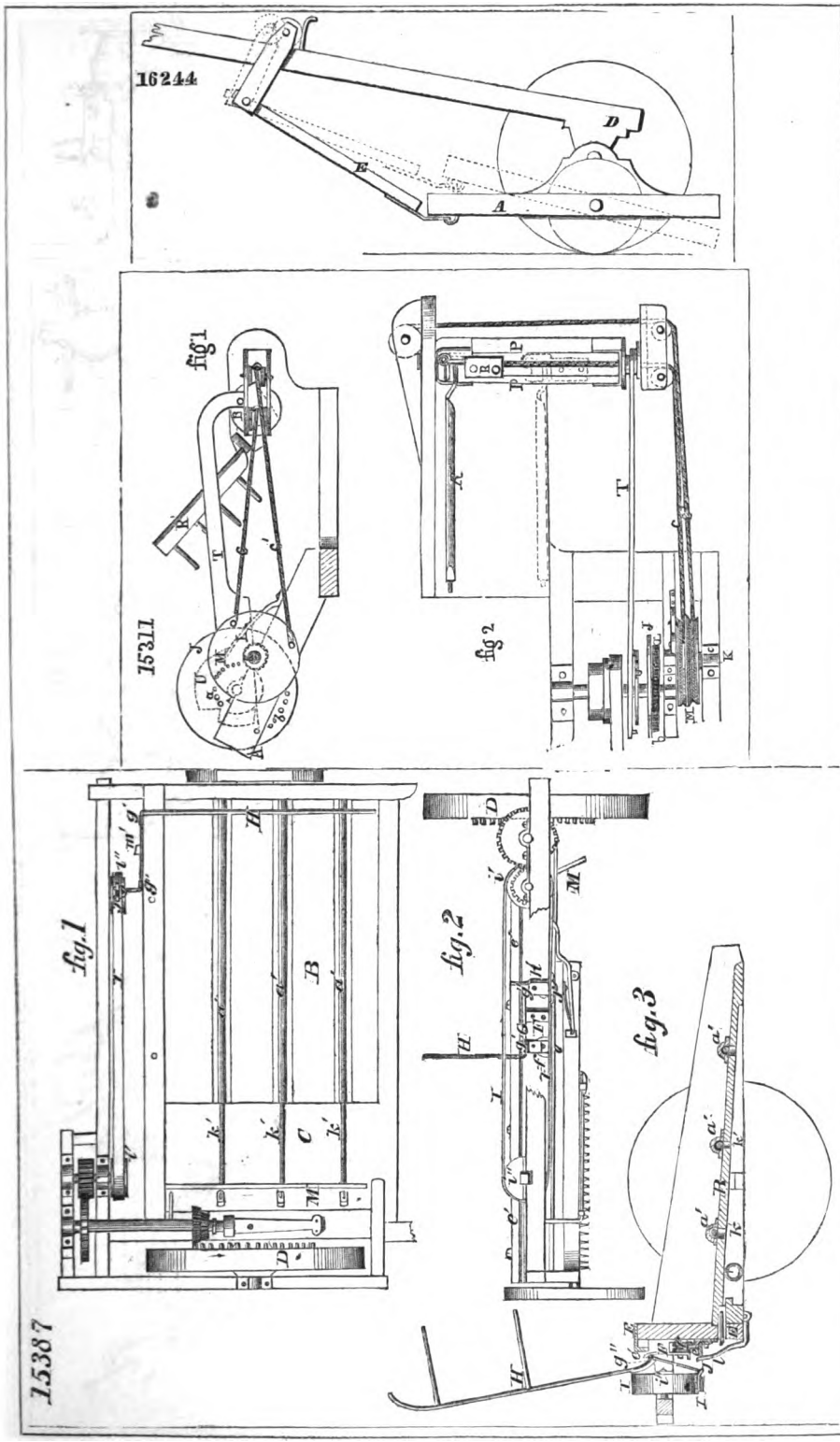

Digitized by Google

14861

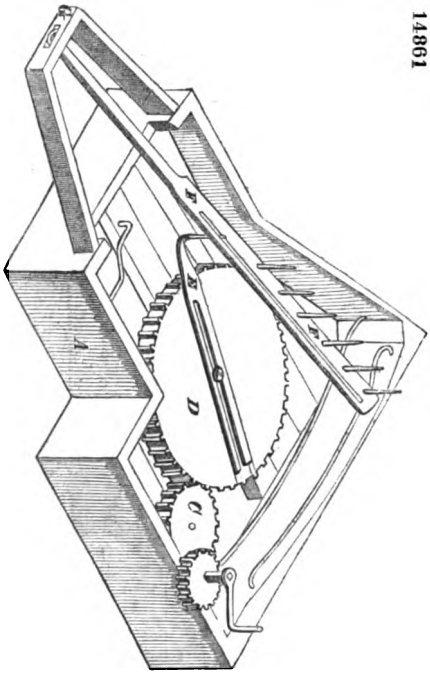

15751

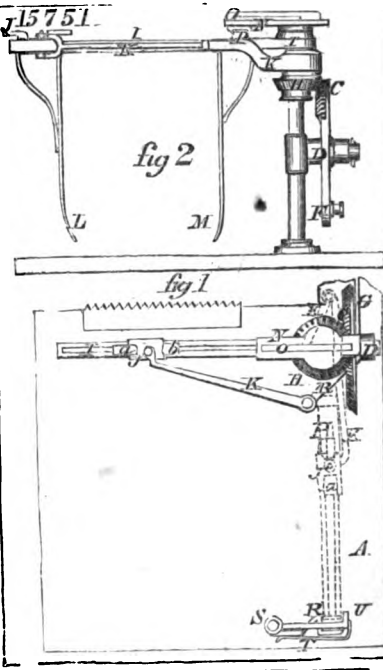

16131

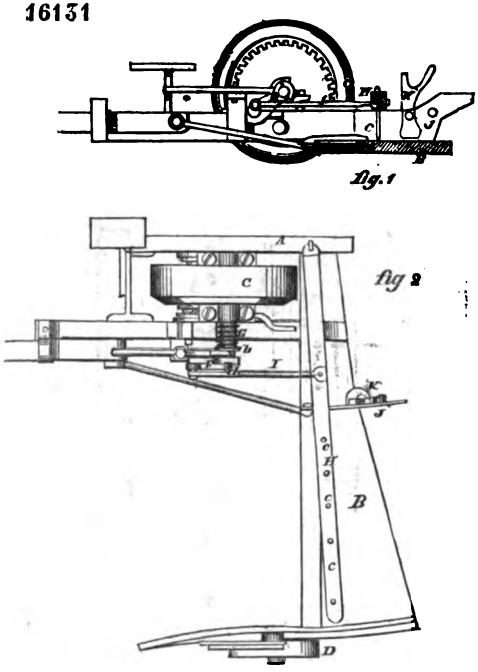

16148

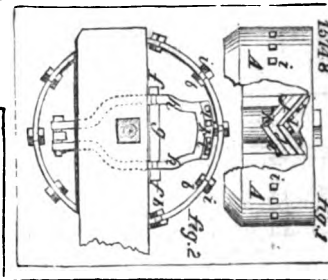

15669

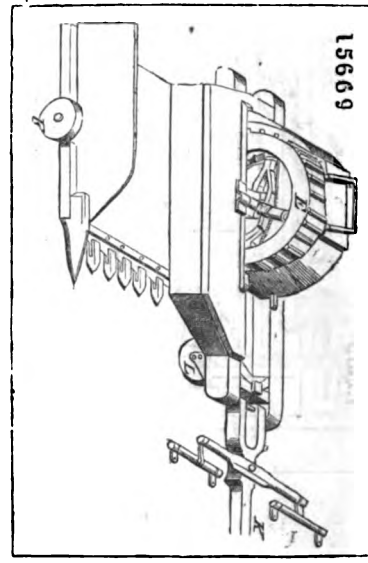

Digitized by Google

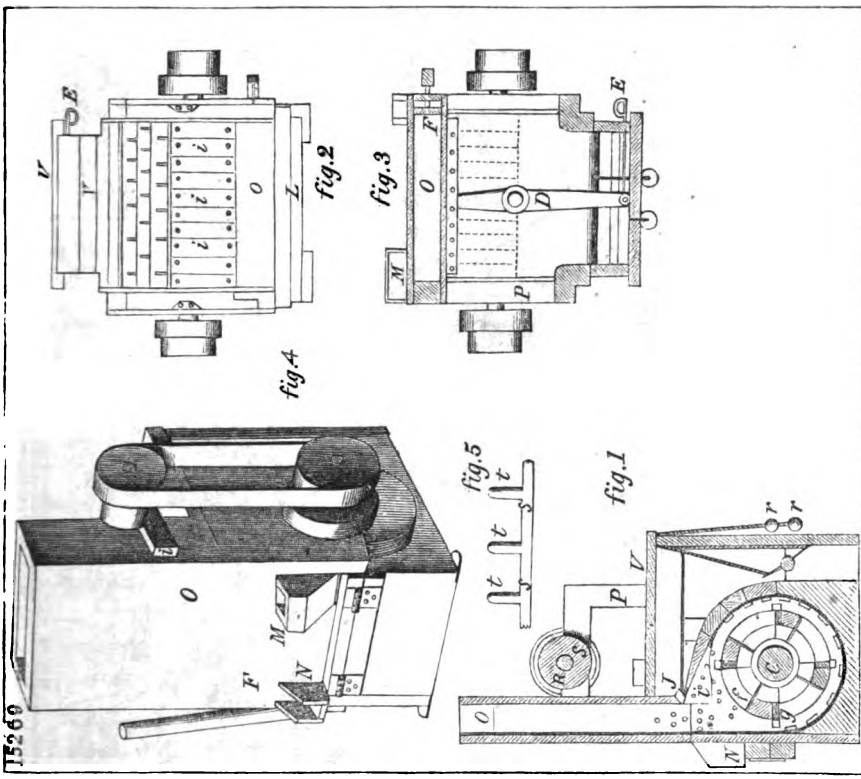

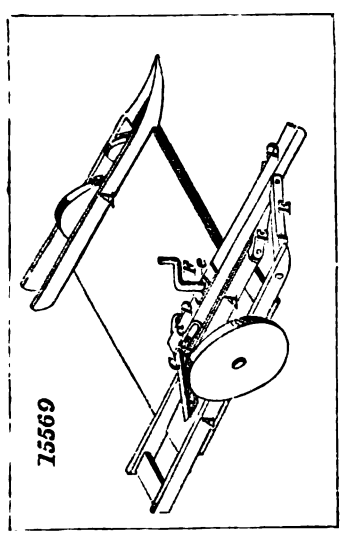

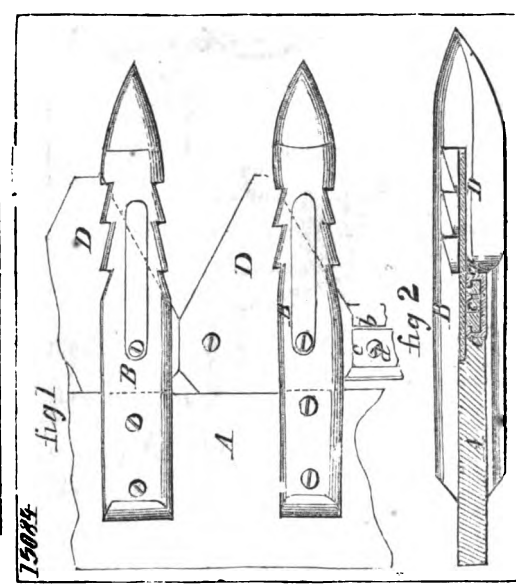

Digitized by Google

15985

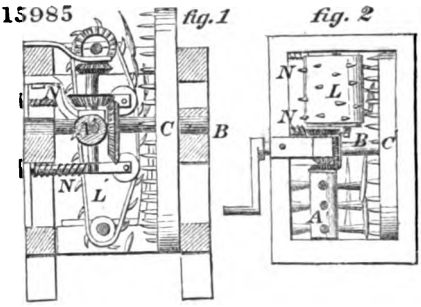

15008

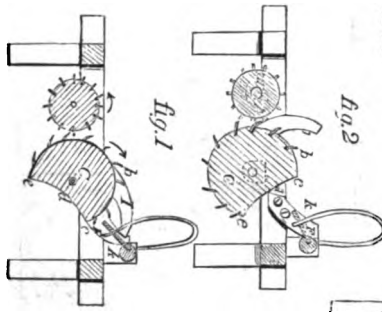

14784

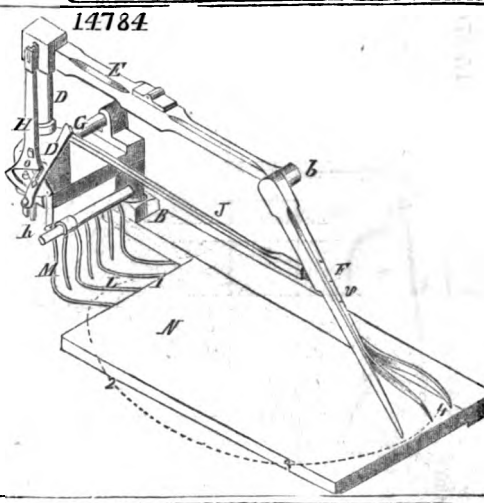

16283

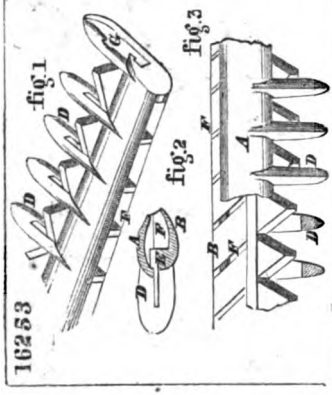

16313

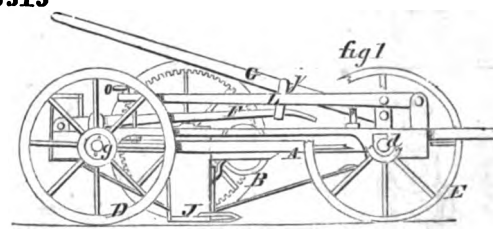

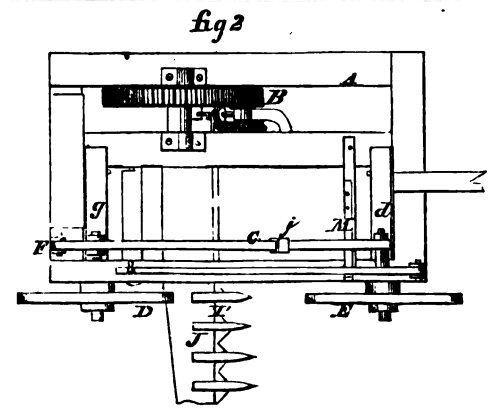

15926

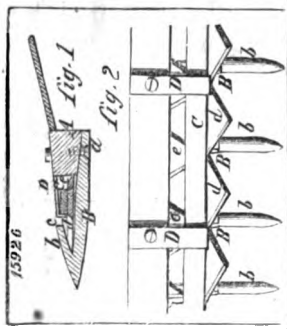

Digitized by Google

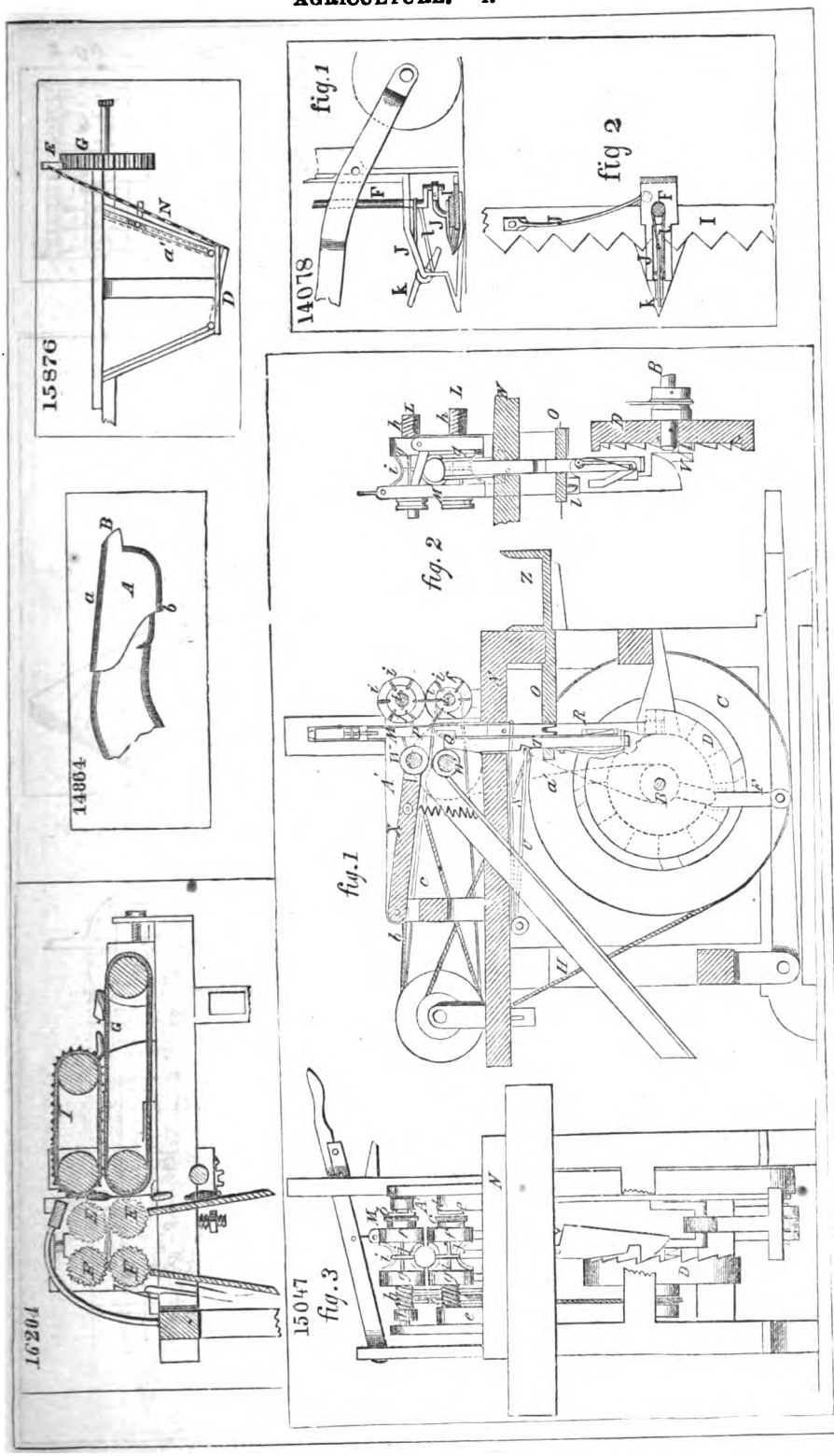

Digitized by Google

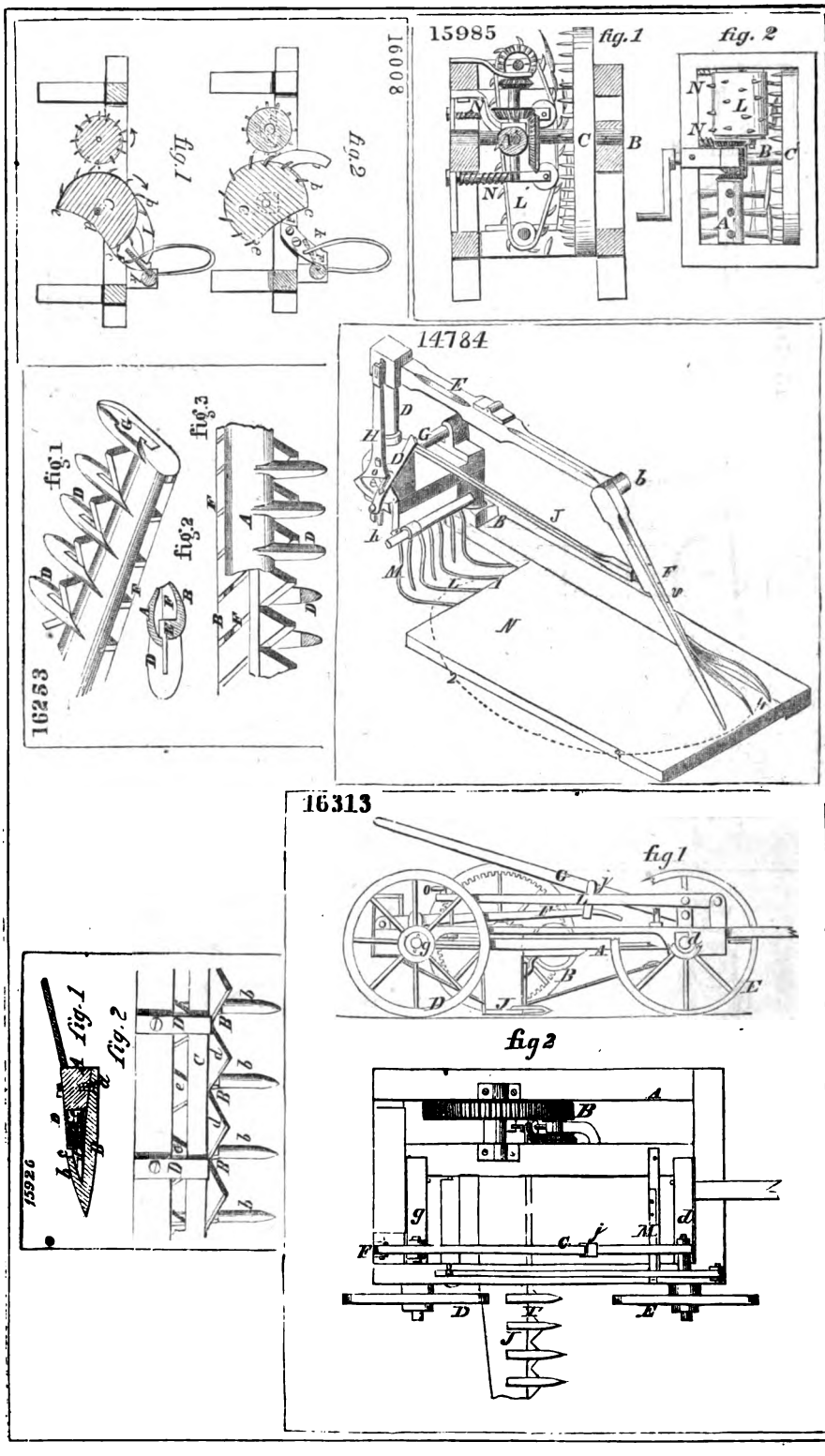

Digitized by Google

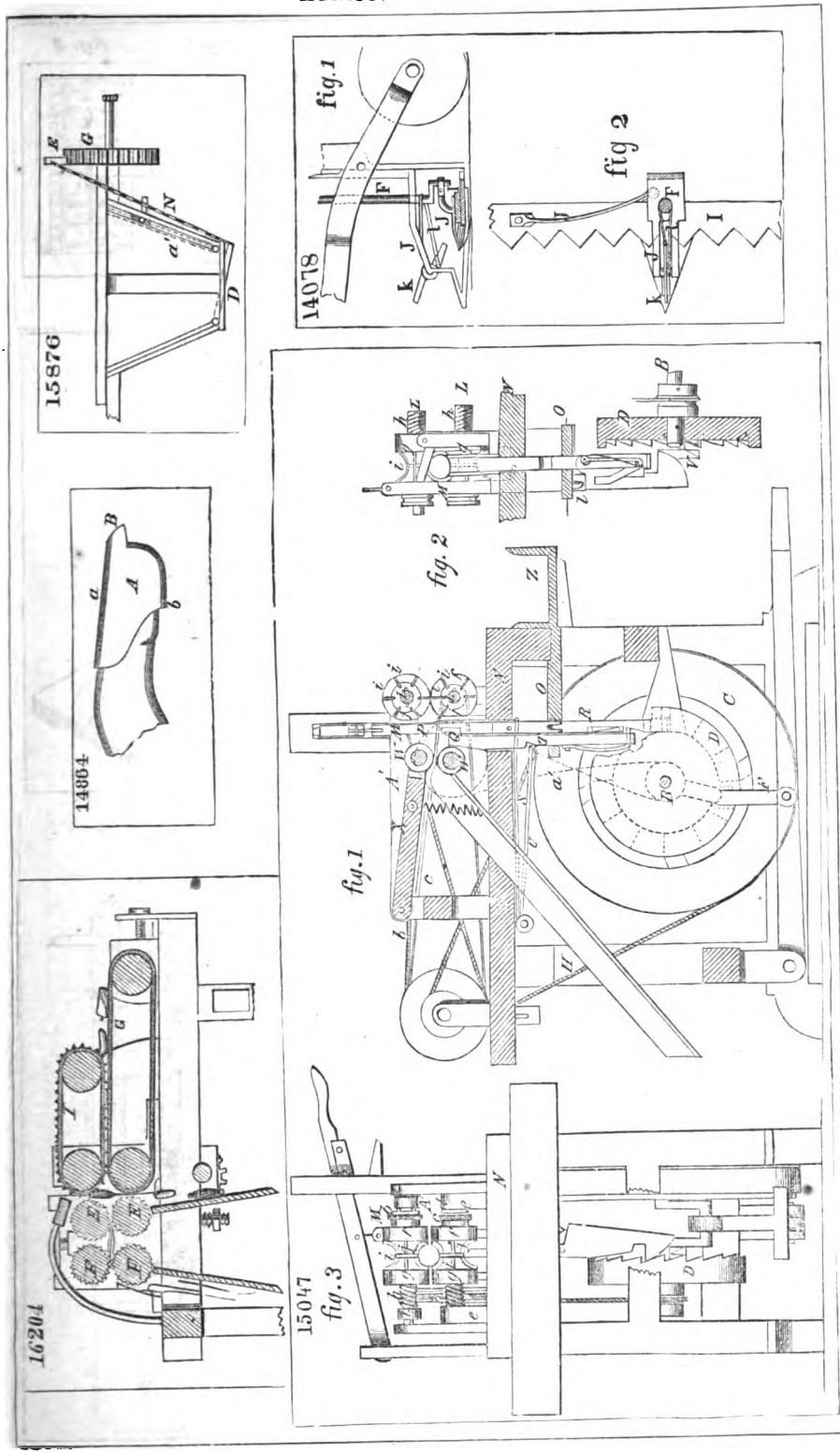
15876
14078
fig. 1
fig 2
14864
16291
fig. 1
fig. 2
15047
fig. 3

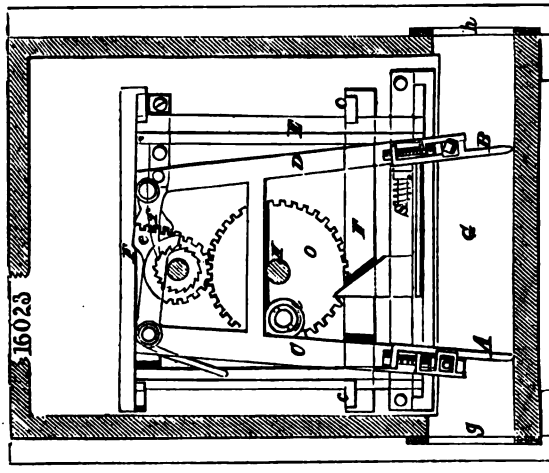

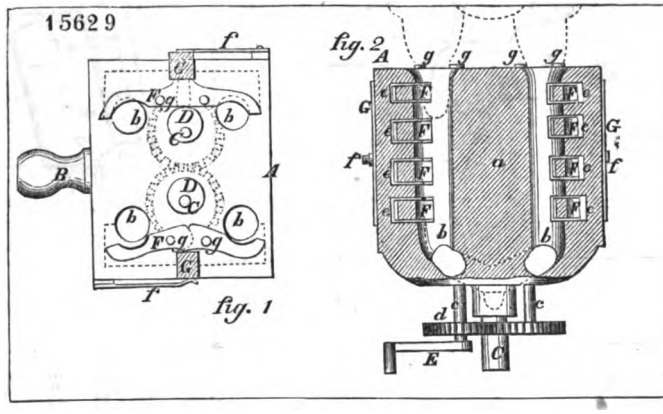

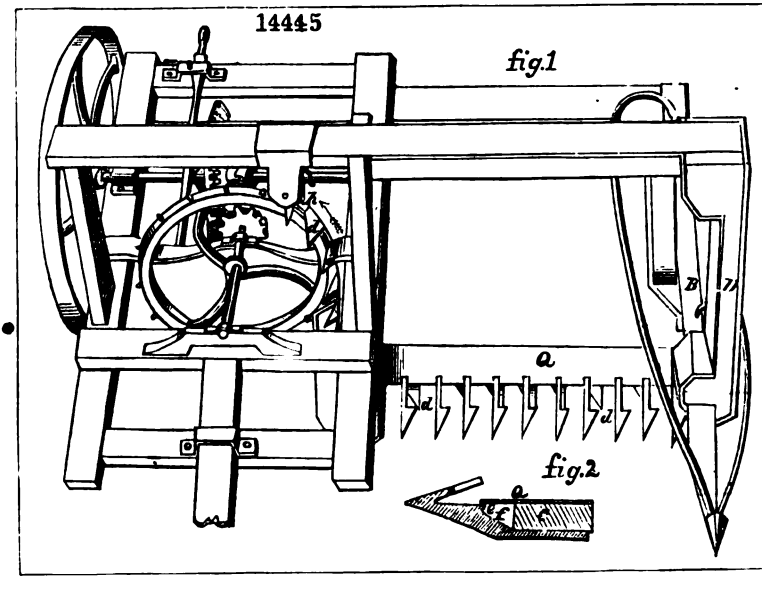

Digitized by Google

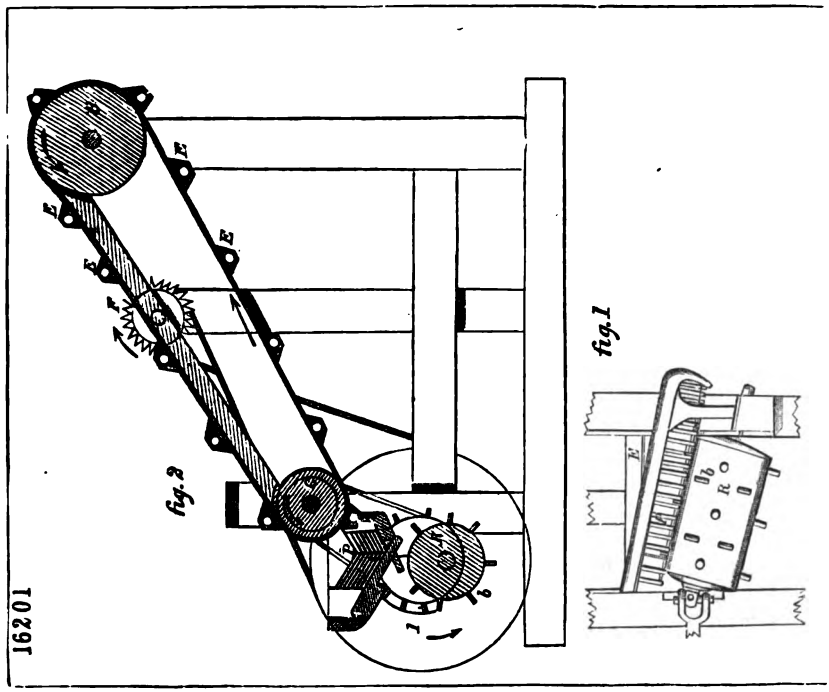

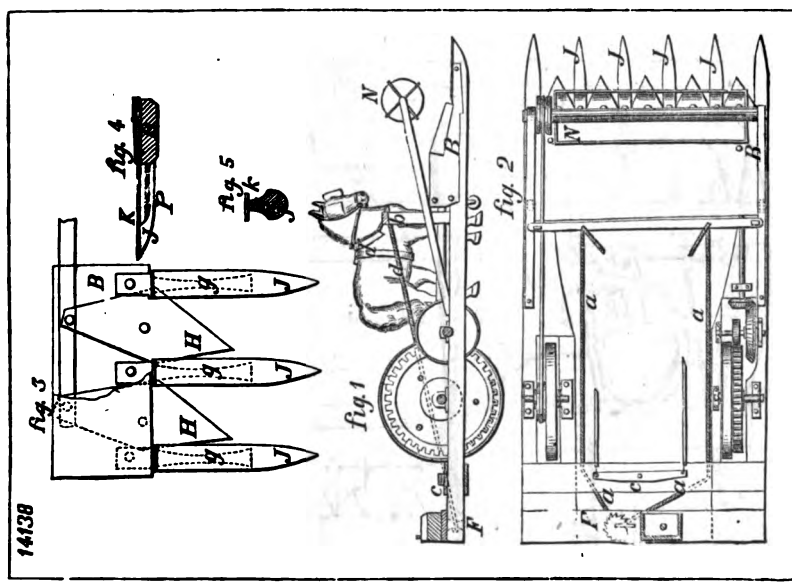

Digitized by Google

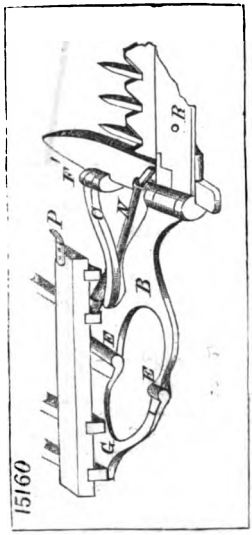

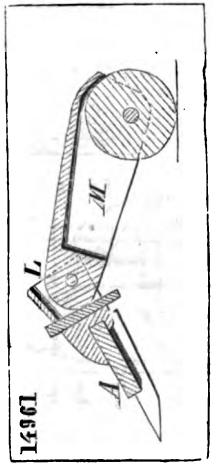

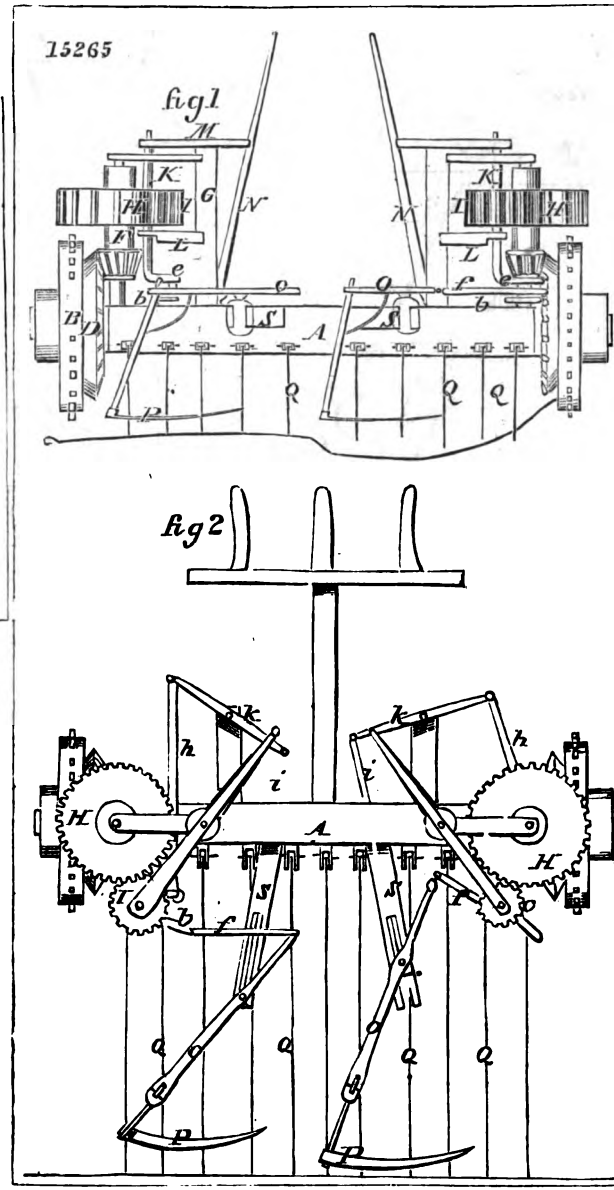

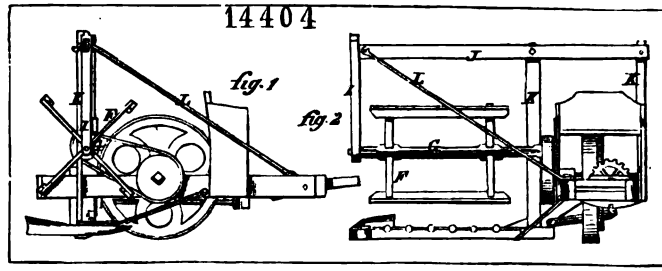

Digitized by Google

14070

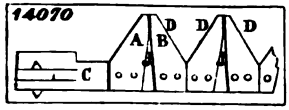

14270

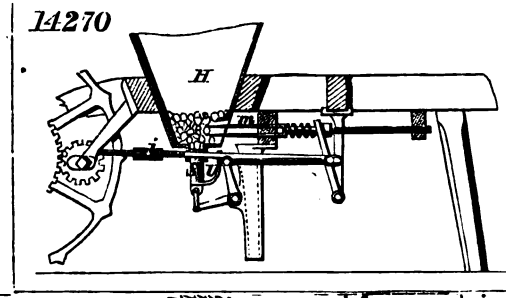

14898

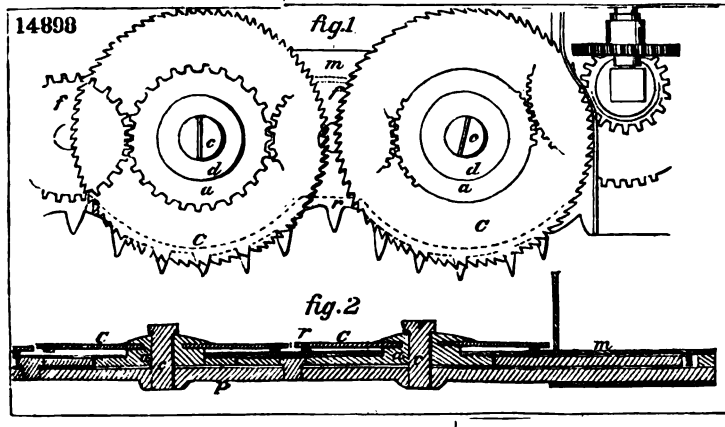

14631

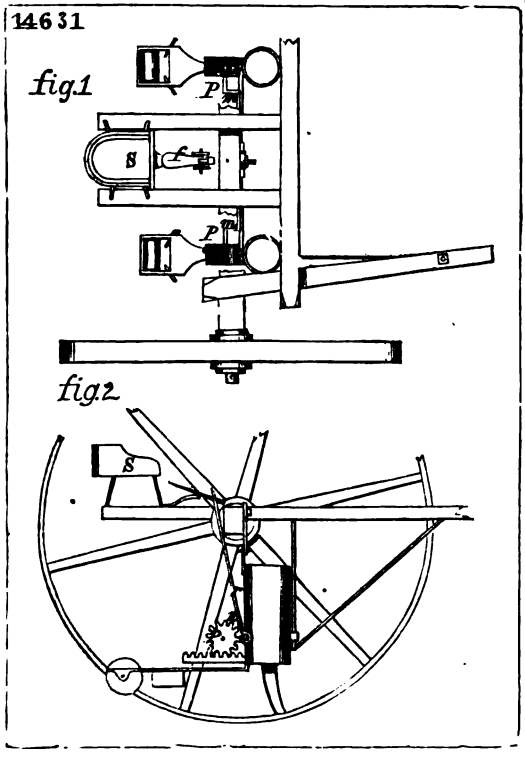

14874

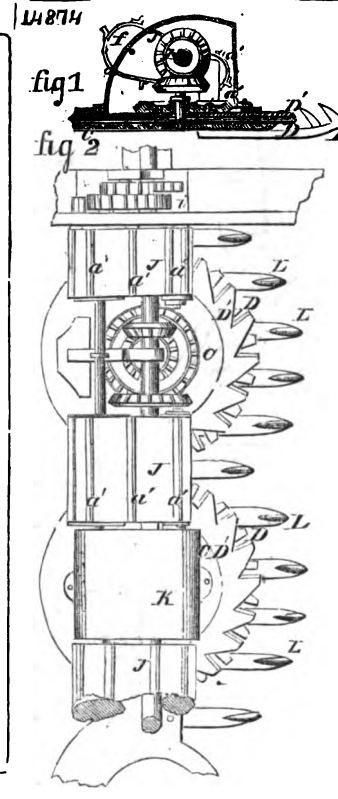

Digitized by Google

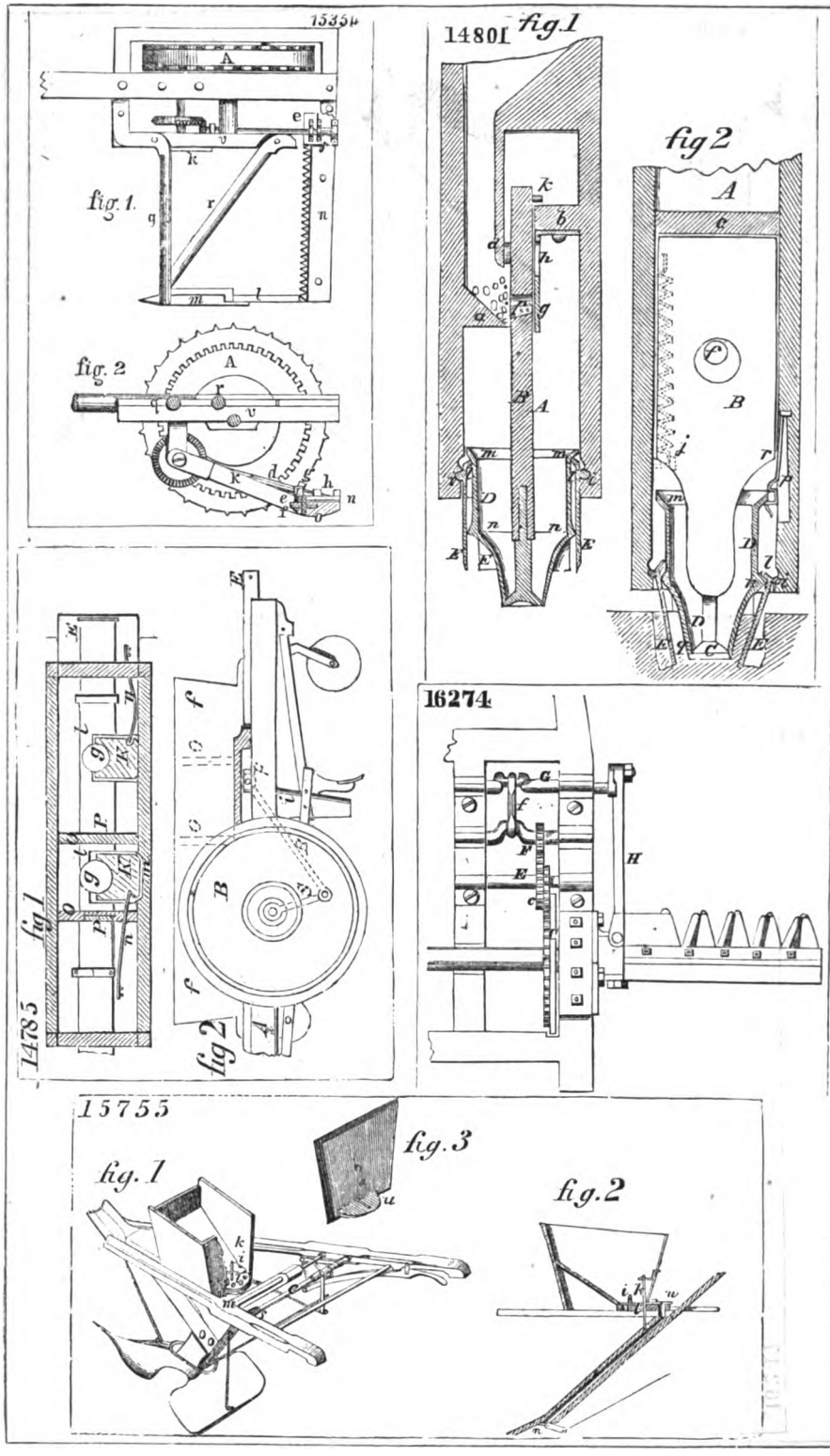

Digitized by Google

15507

fig. 1

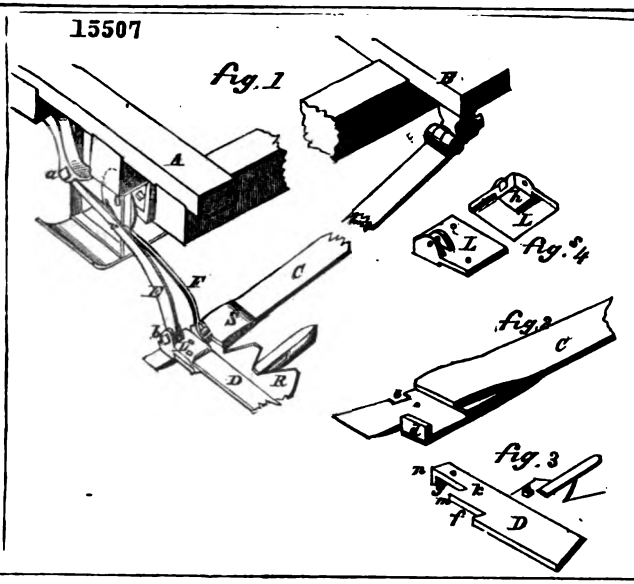

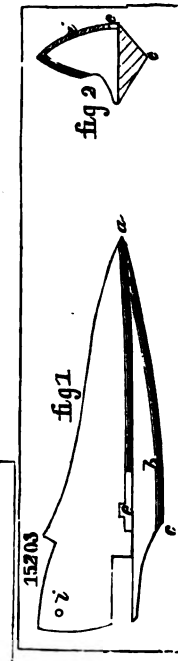

15322

fig. 1

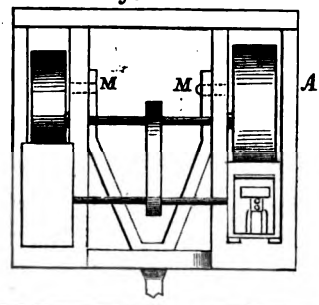

fig. 2

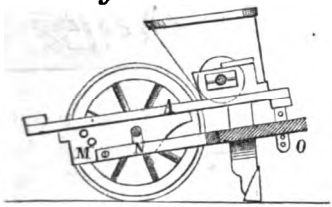

16247

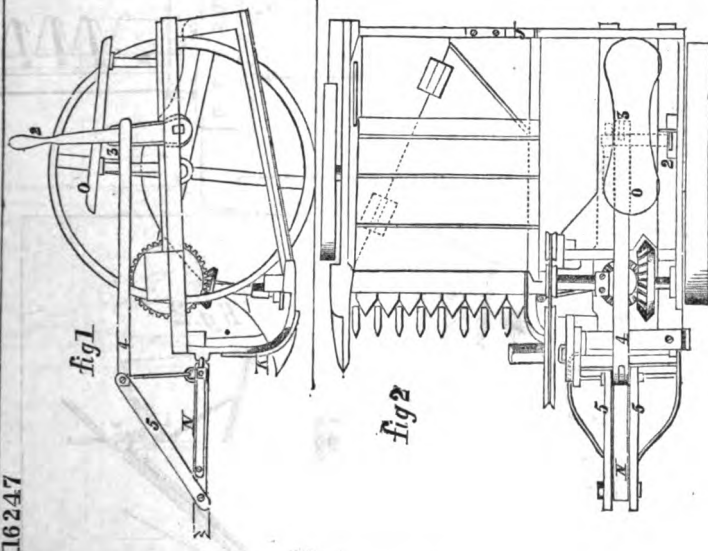

Digitized by Google

14861

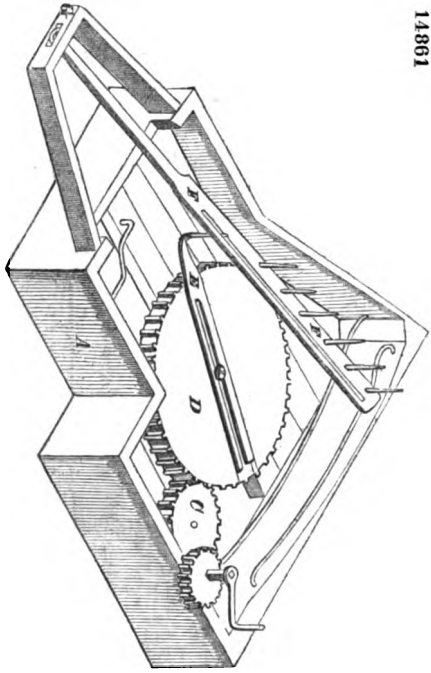

15751

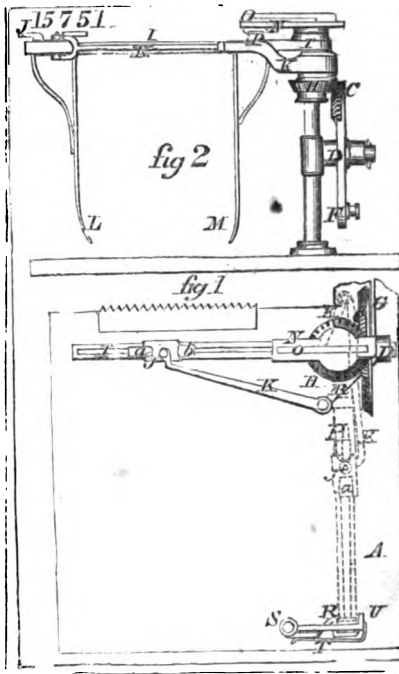

15748

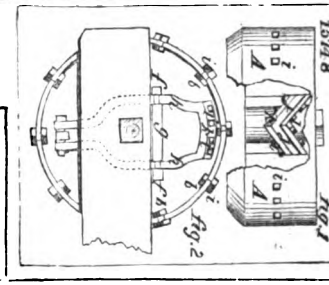

16131

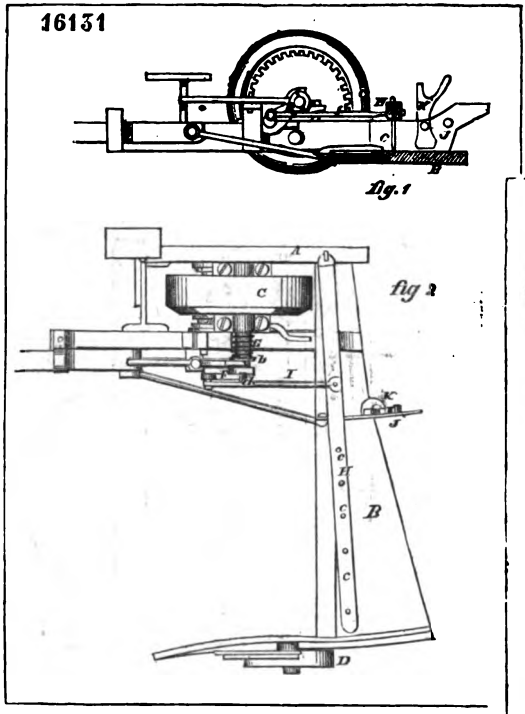

15669

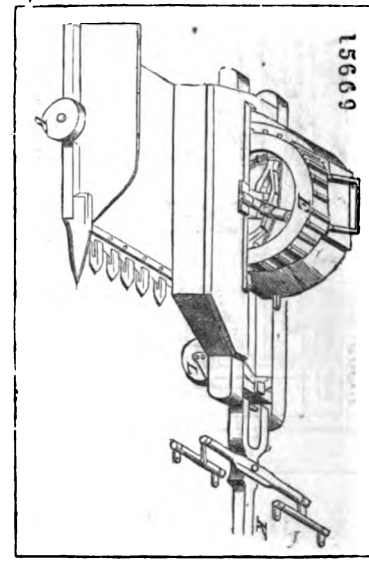

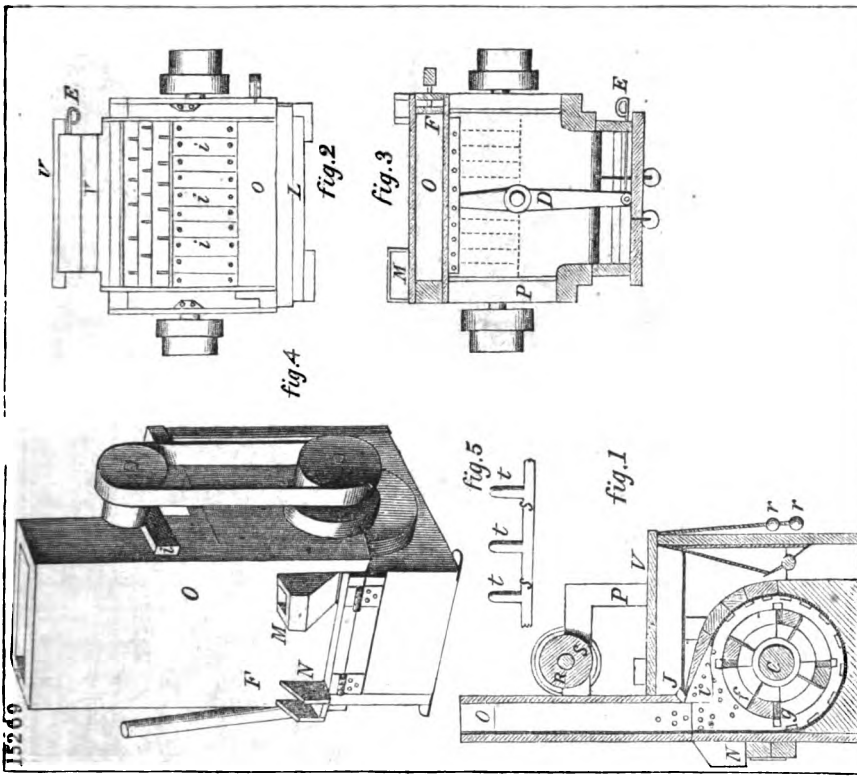

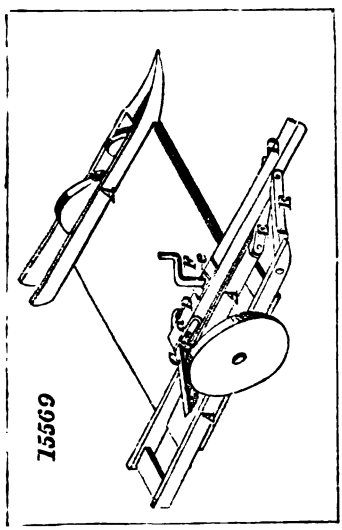

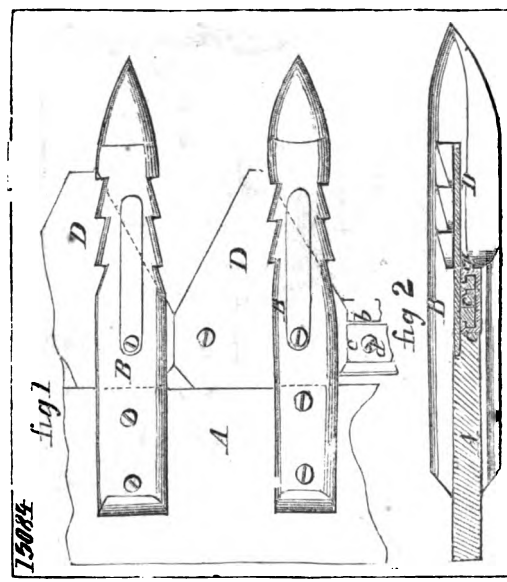

Digitized by Google

16008

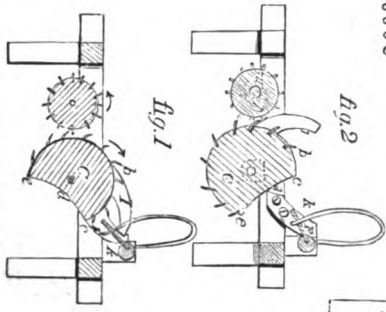

15985

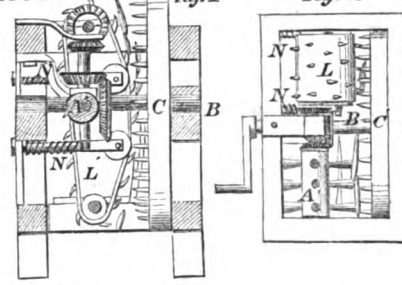

16253

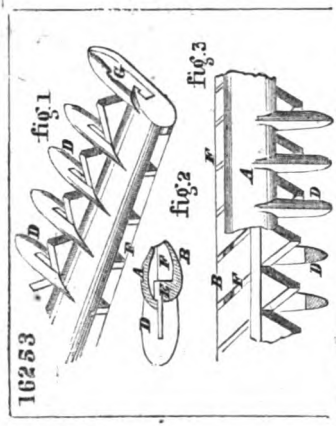

14784

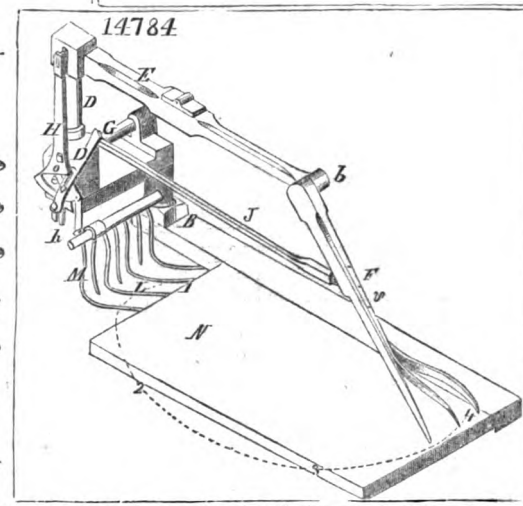

16313

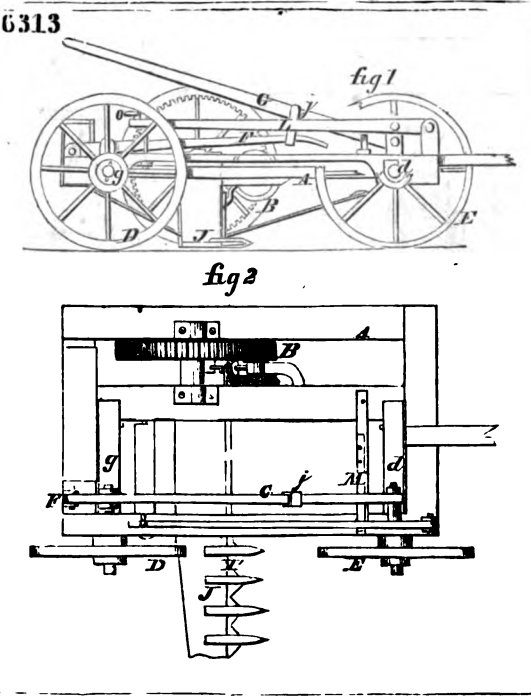

15926

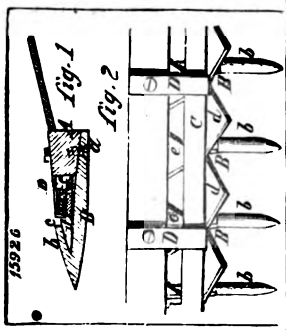

Digitized by Google

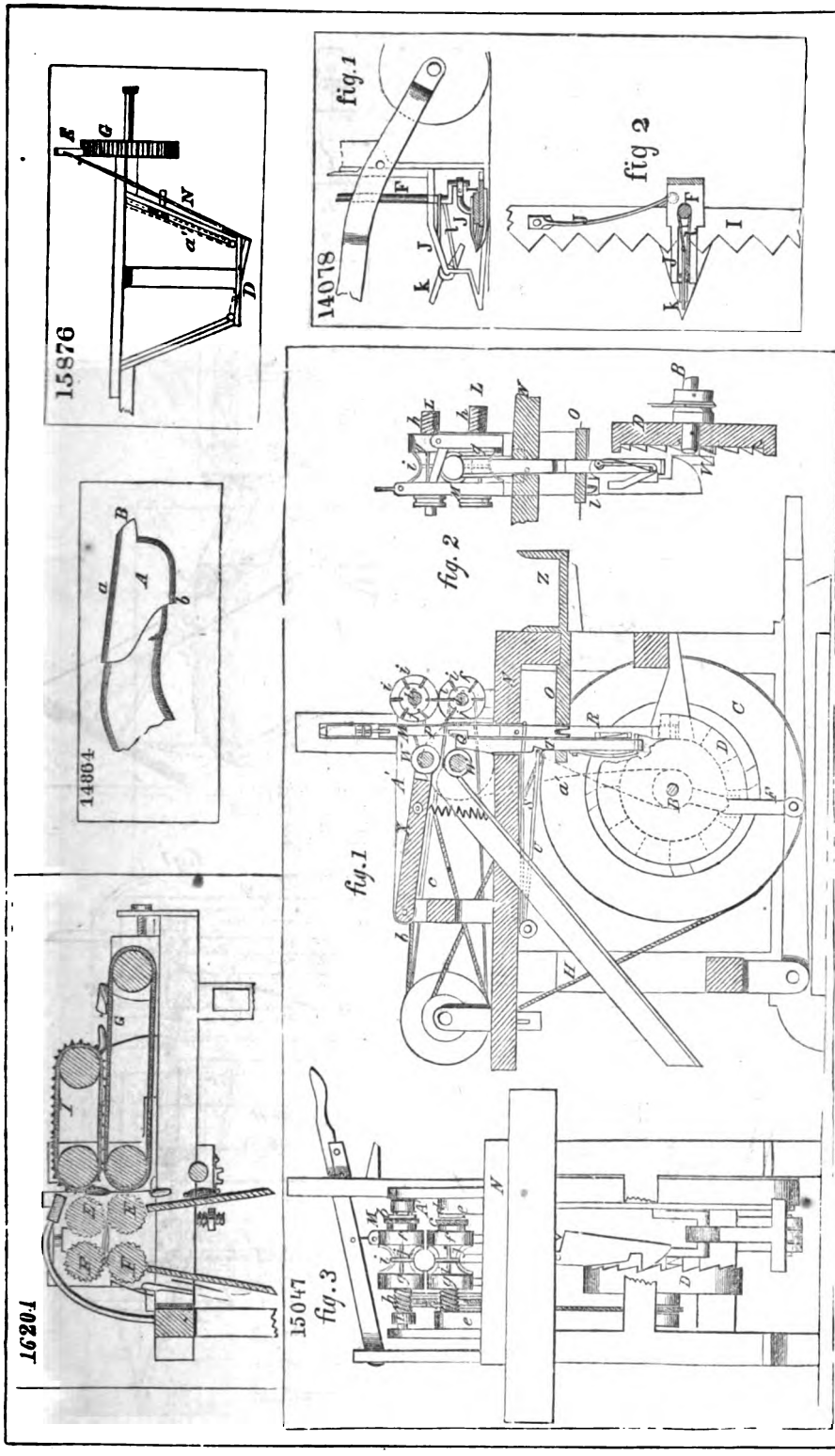

Digitized by Google

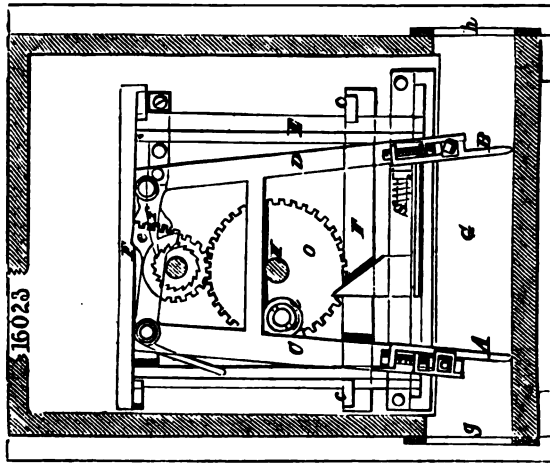

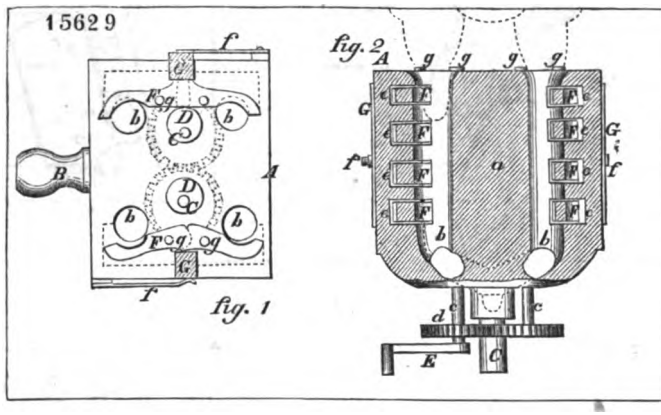

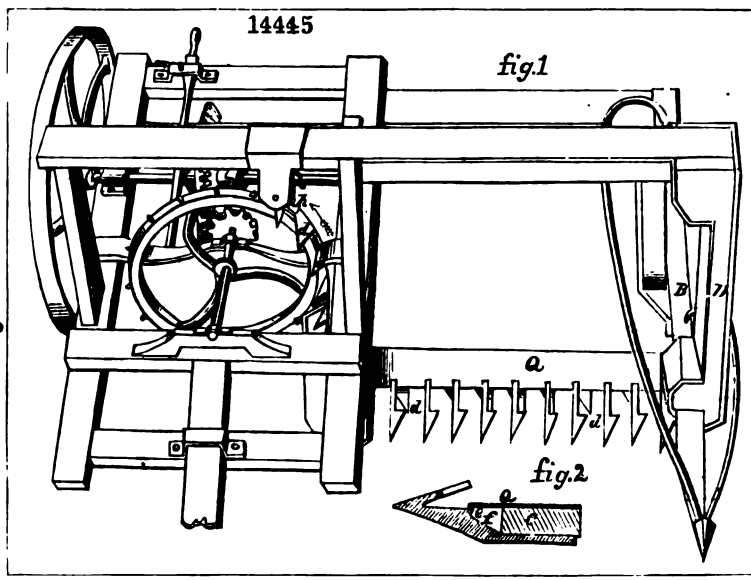

Digitized by Google

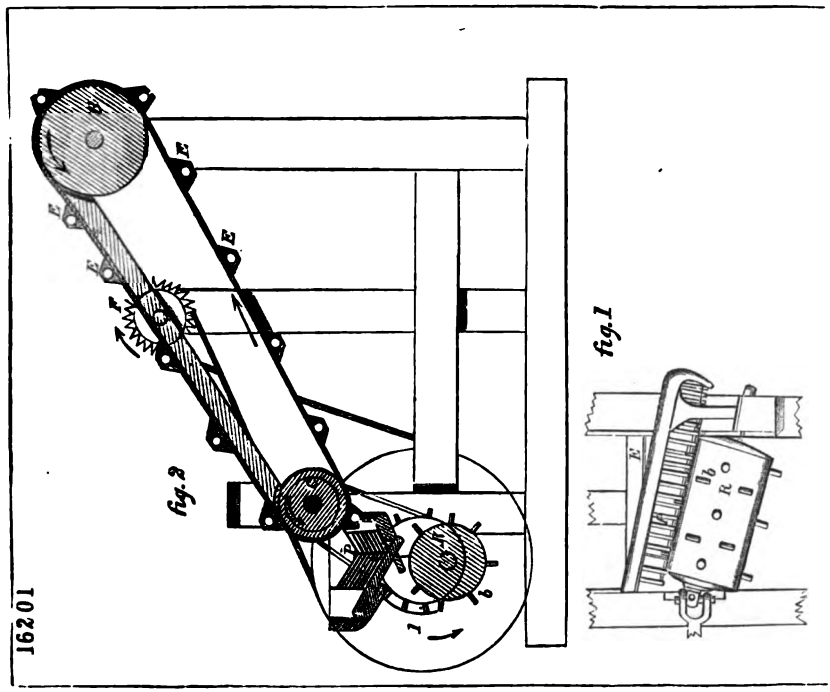

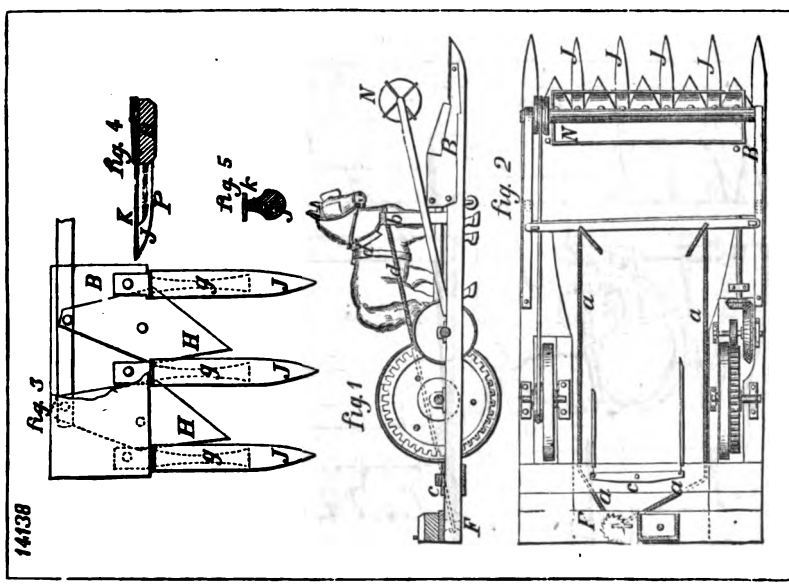

Digitized by Google

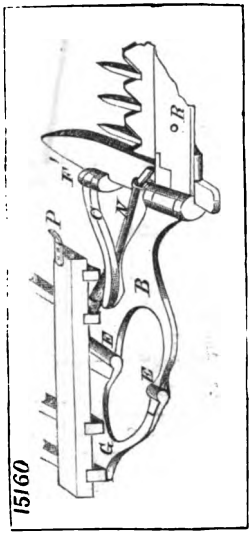

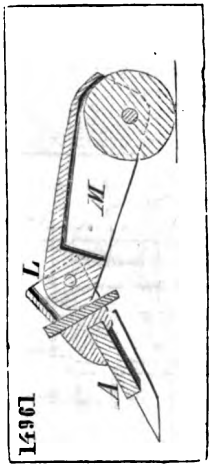

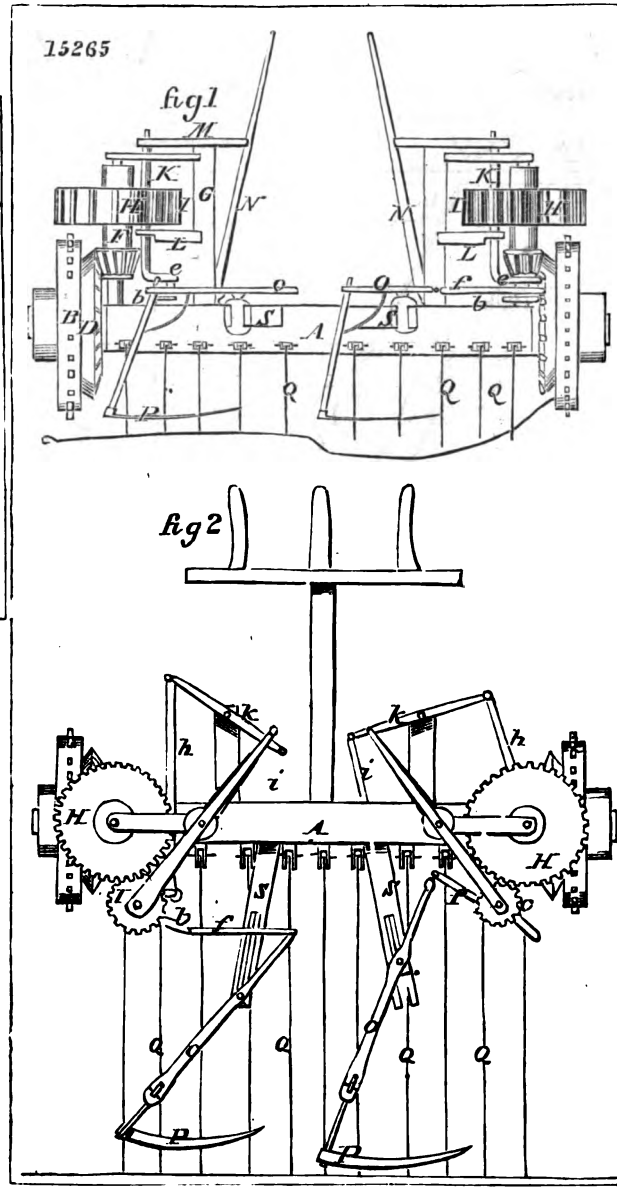

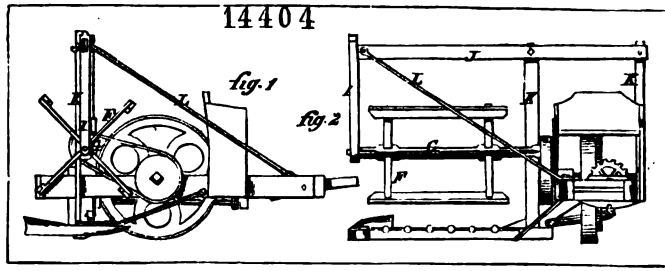

Digitized by Google

14070

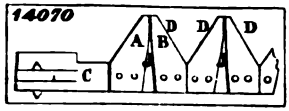

14270

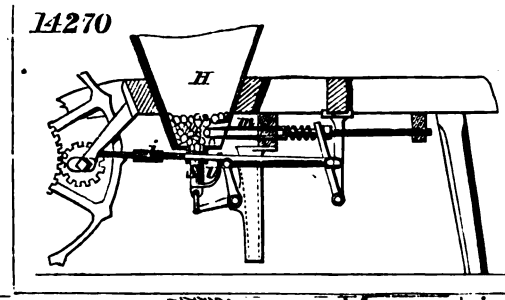

14898

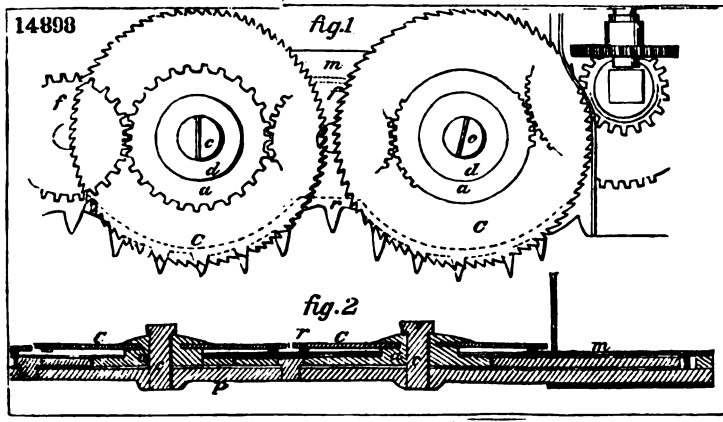

14631

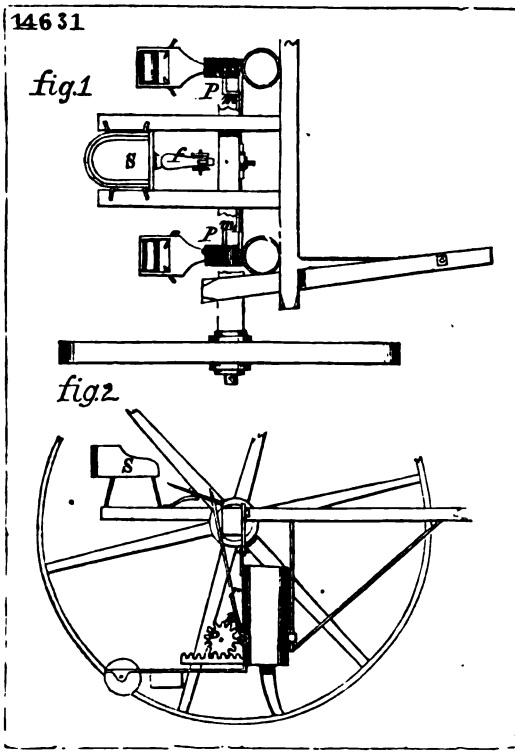

14874

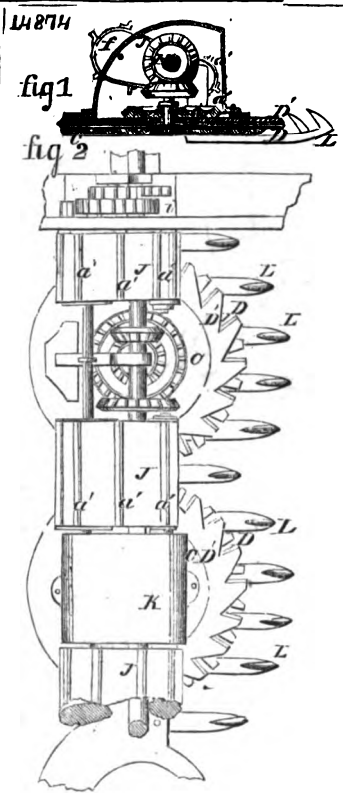

Digitized by Google

15354

fig. 1.

fig. 2

14801 fig. 1

fig 2

14785 fig 1

fig 2

16274

15755

fig. 1

fig. 3

fig. 2

15507

fig. 1

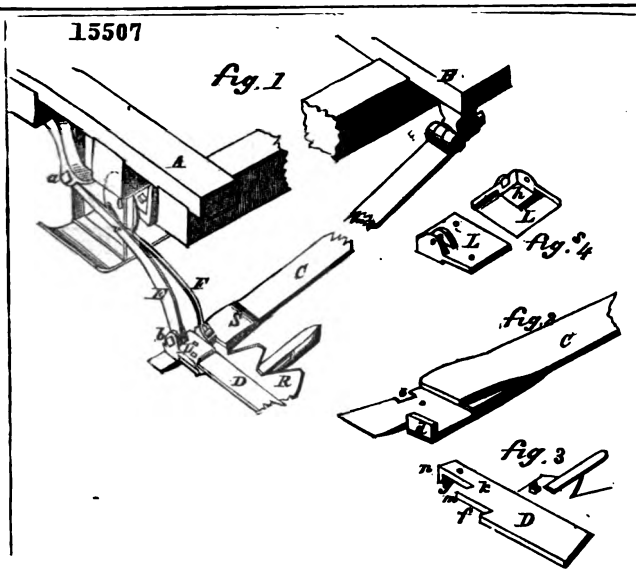

15203

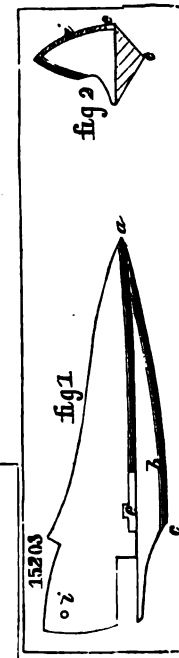

15322

fig. 1

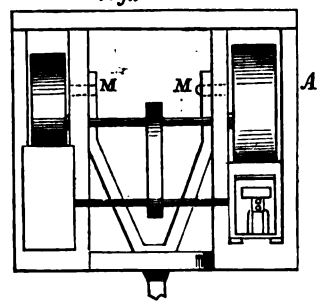

fig. 2

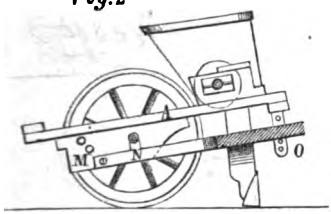

16247

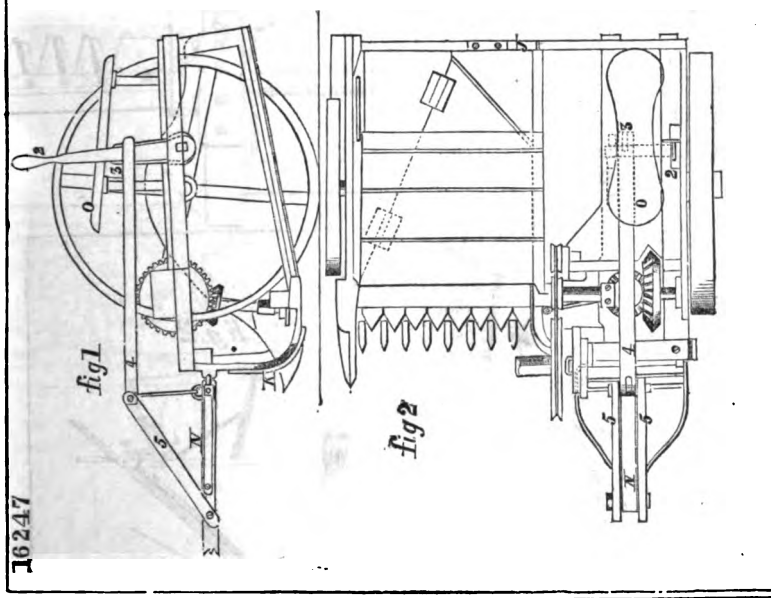

Digitized by Google

14134

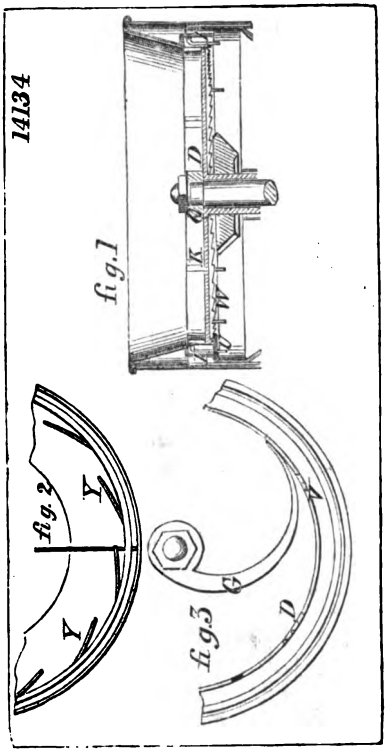

15338

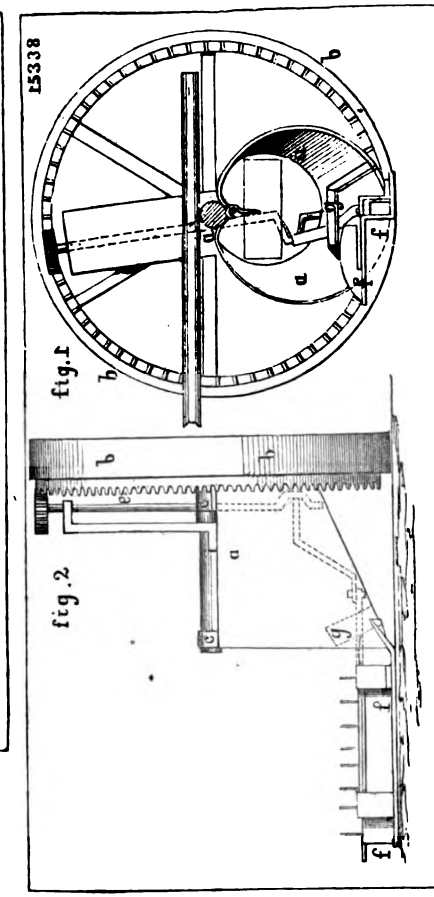

14529.

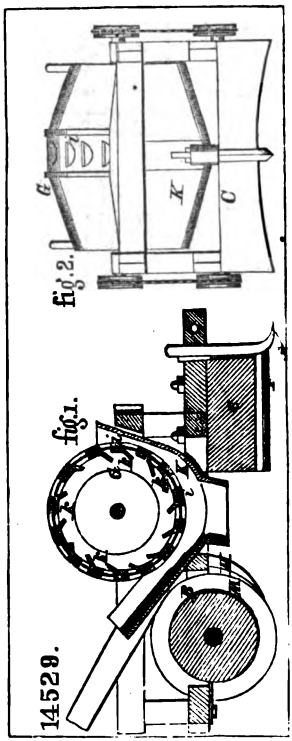

15426

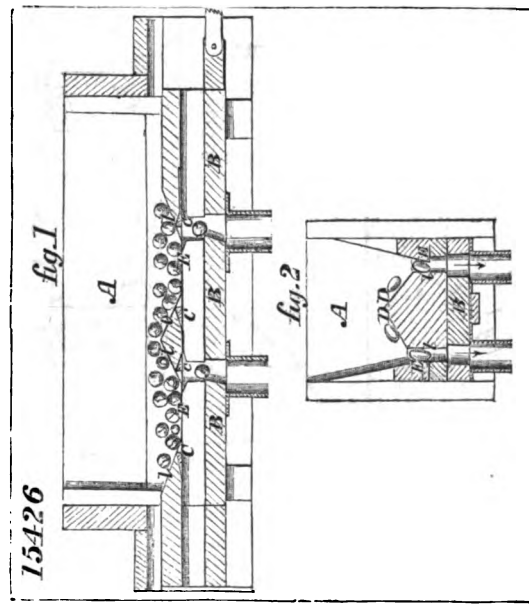

Digitized by Google

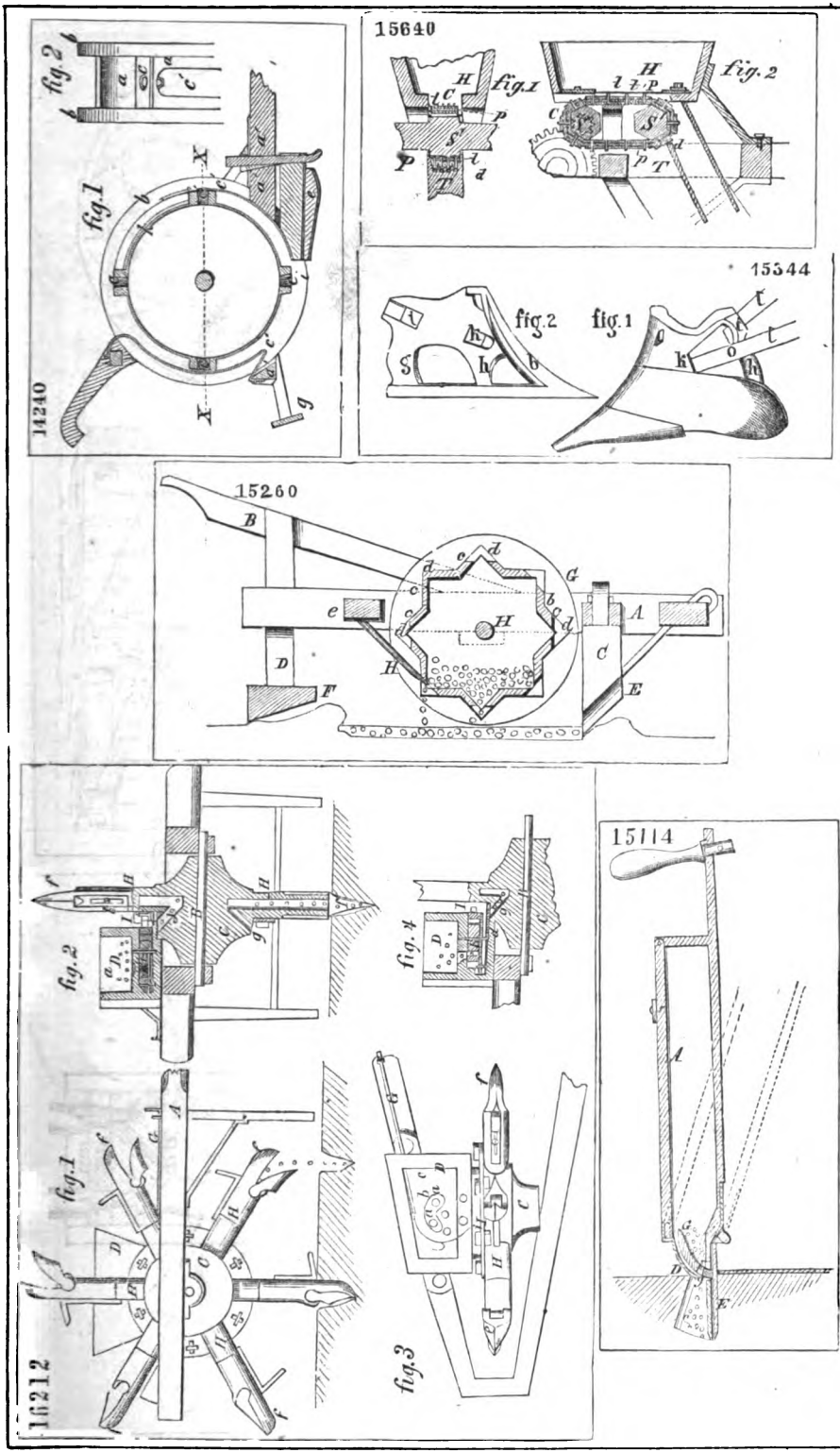

Digitized by Google

14134

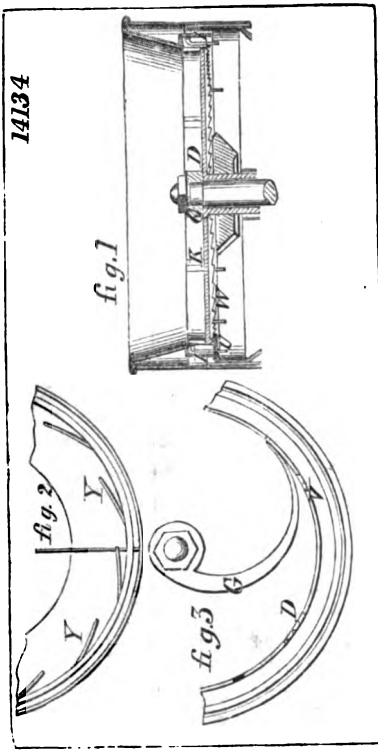

15338

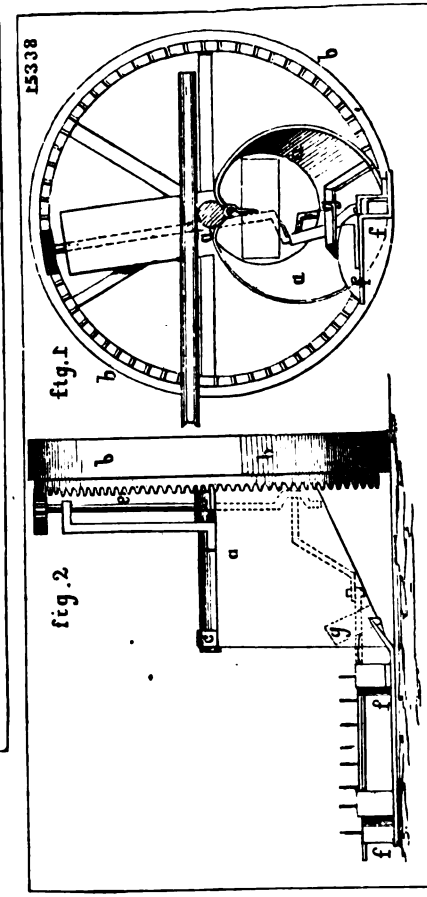

14529.

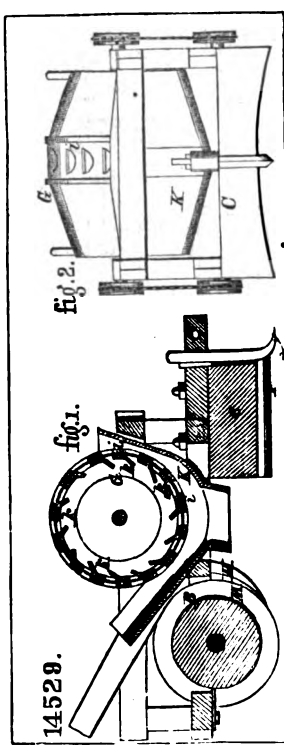

15426

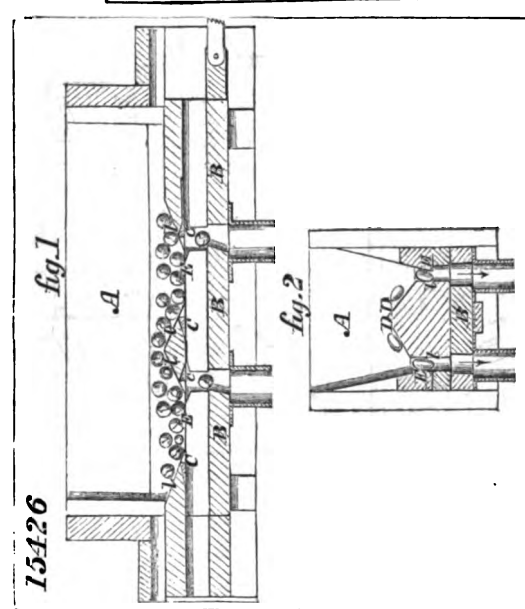

Digitized by Google

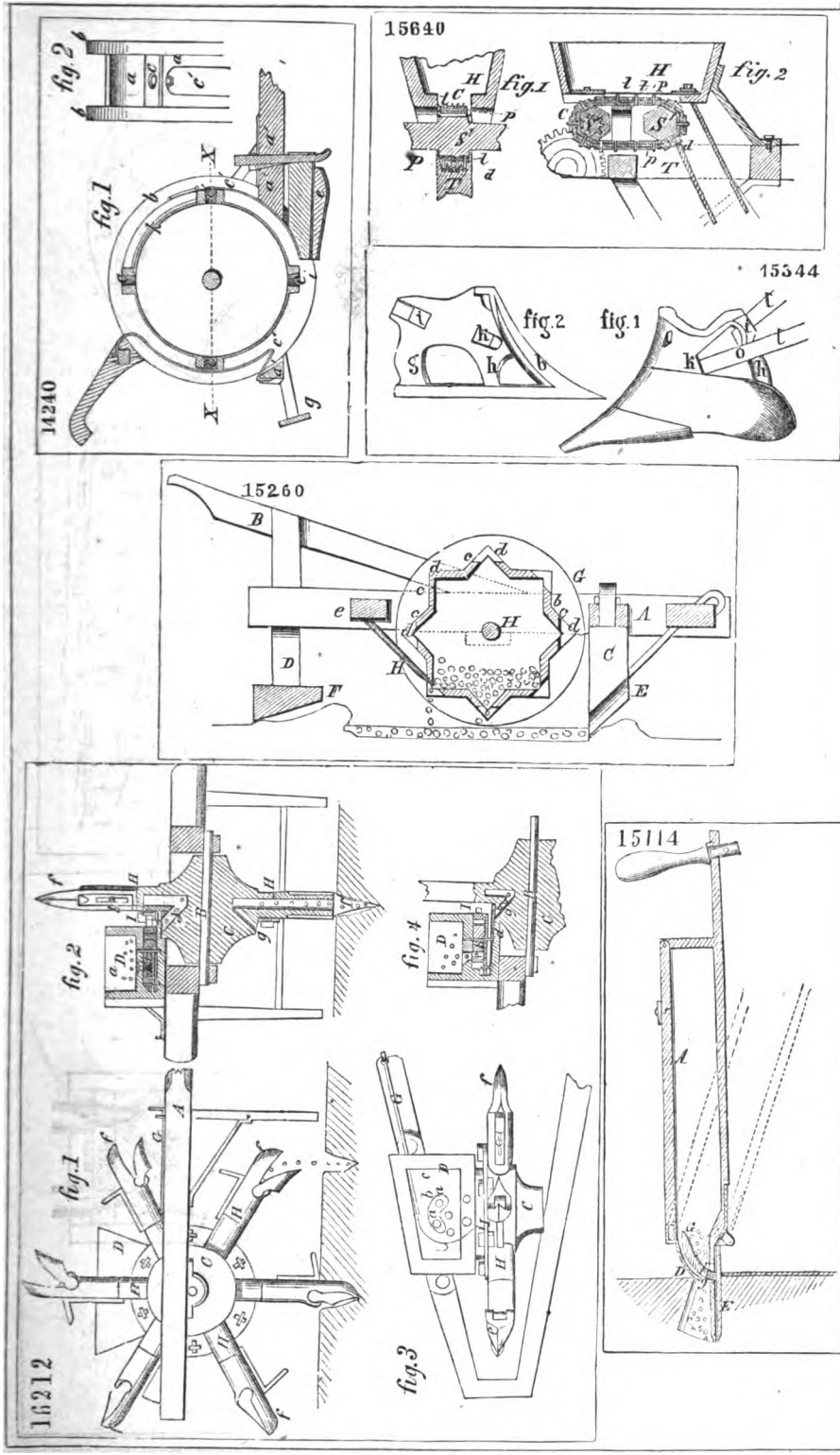

Digitized by Google

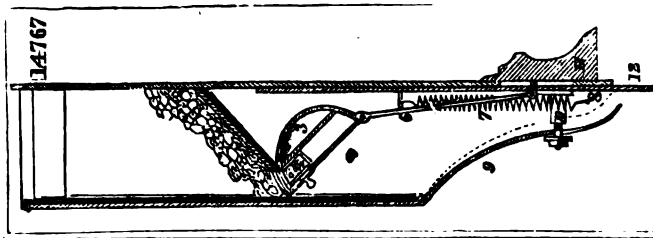

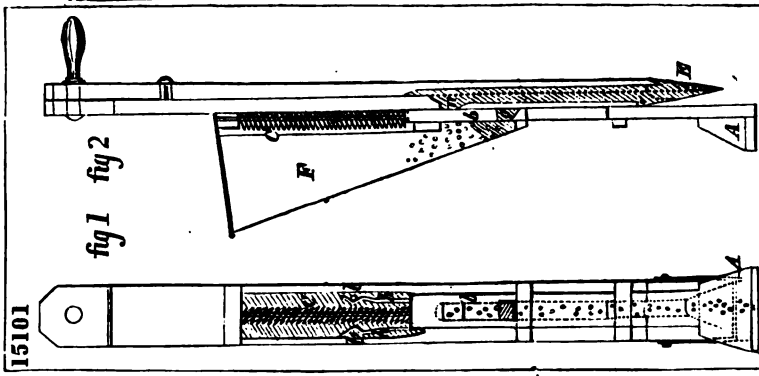

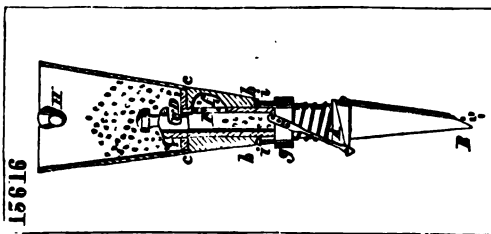

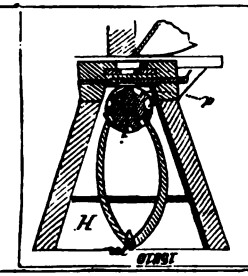

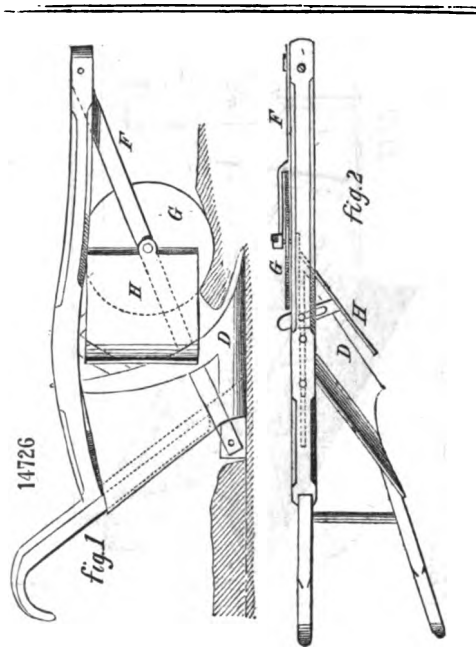

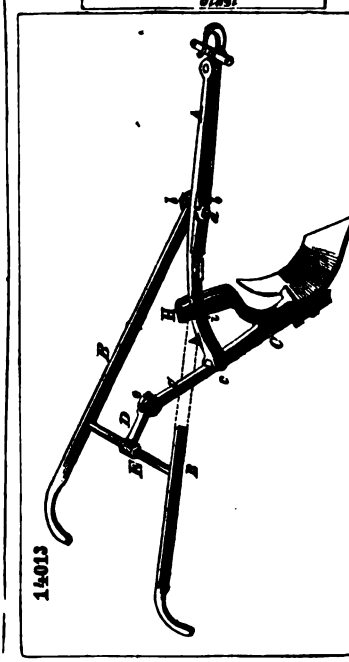

Digitized by Google

16314

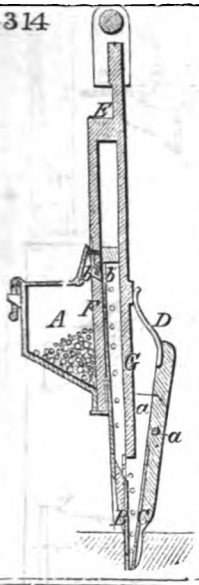

15918

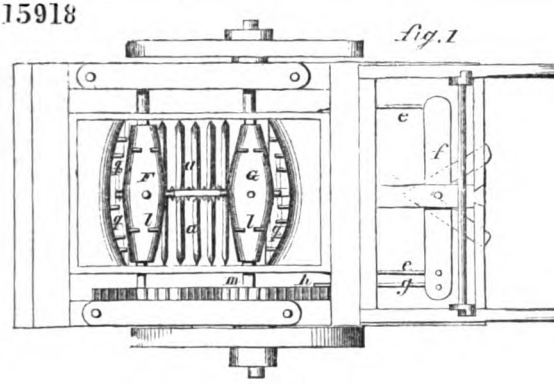

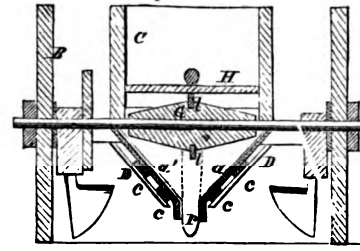

14504

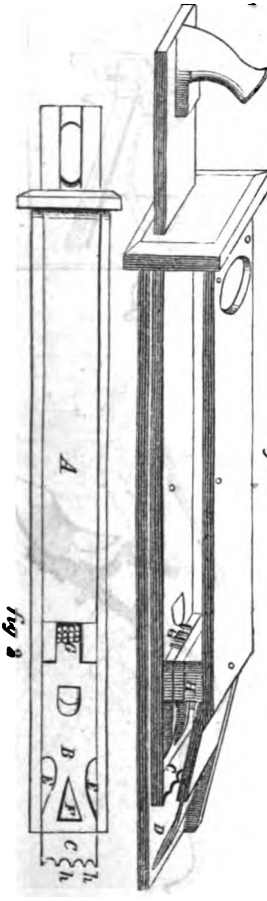

15431

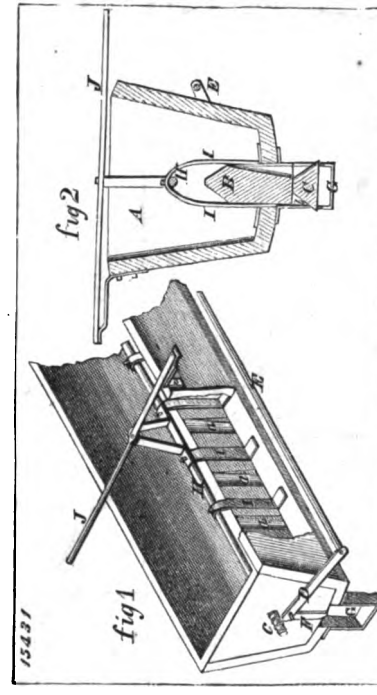

Digitized by Google

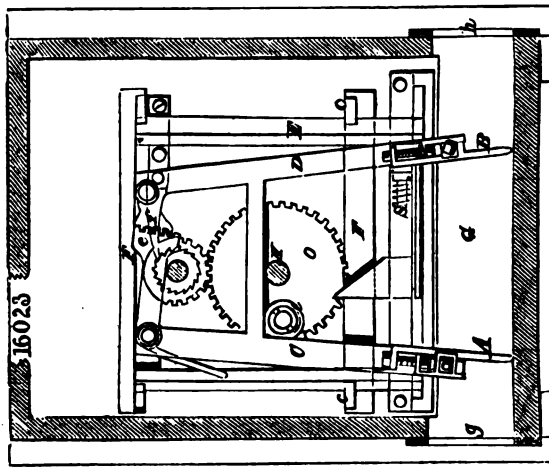

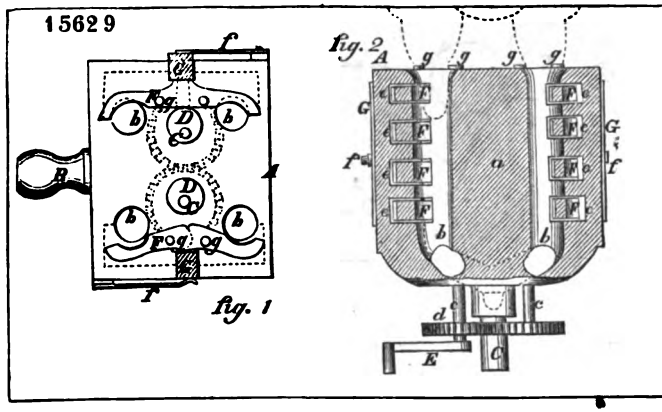

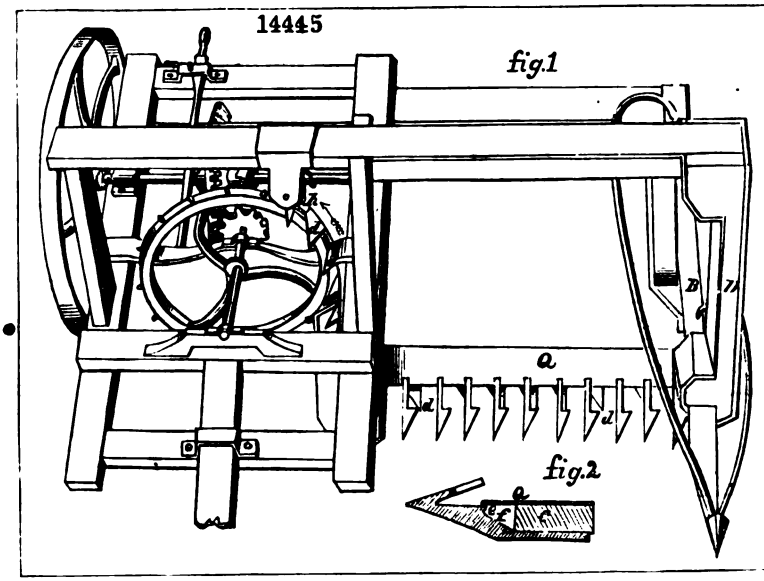

Digitized by Google

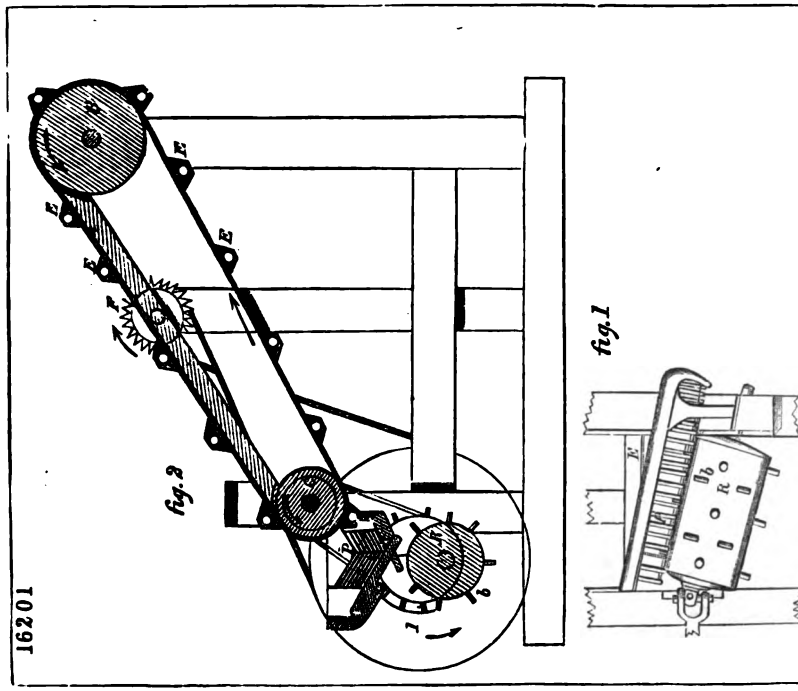

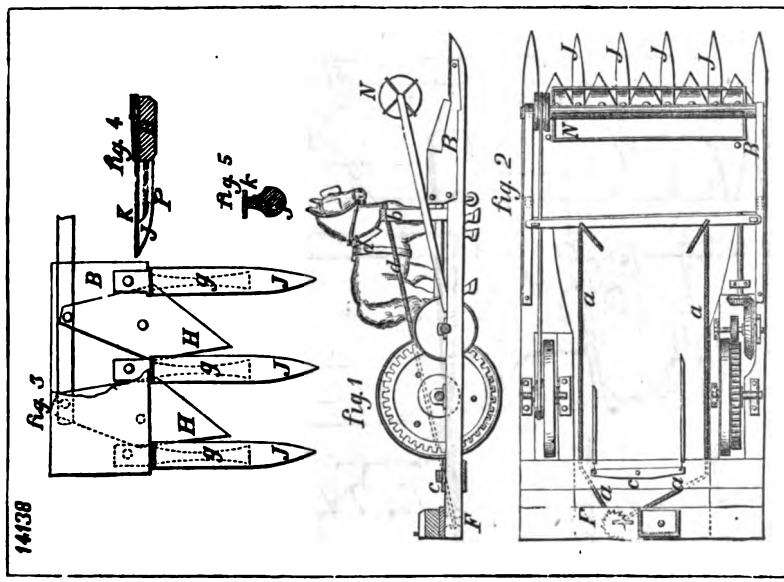

Digitized by Google

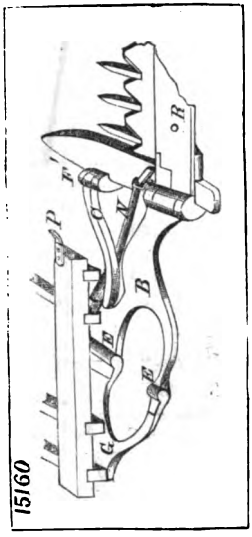

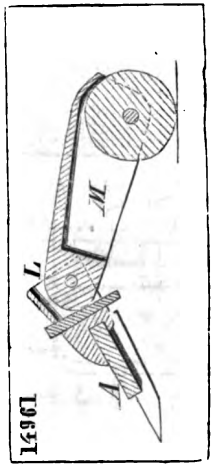

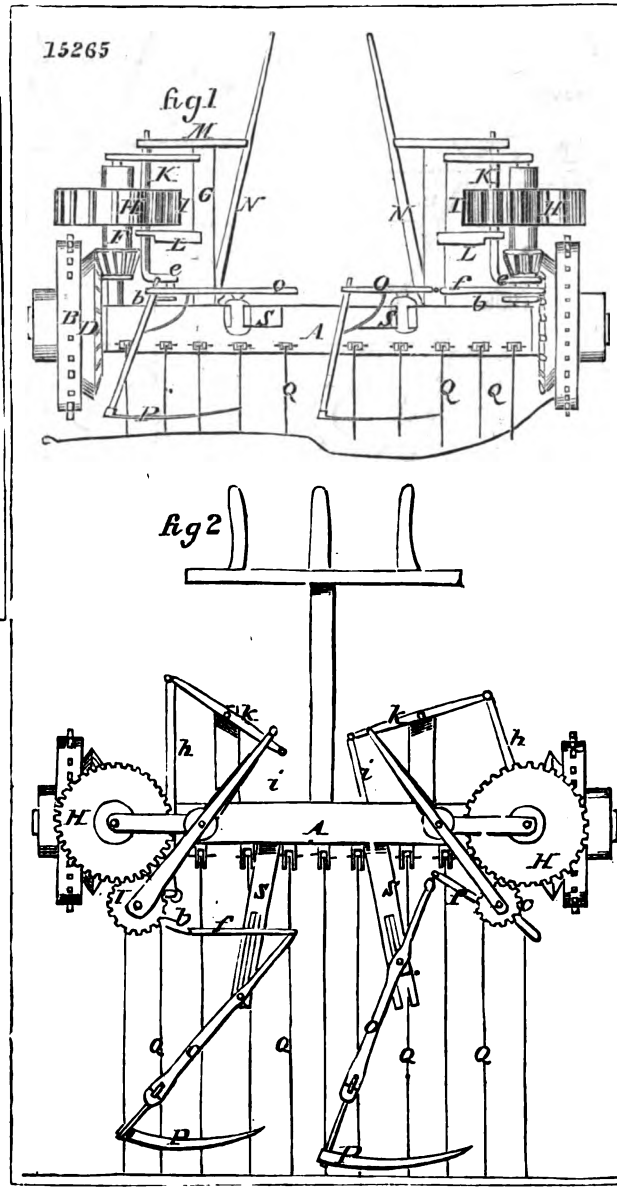

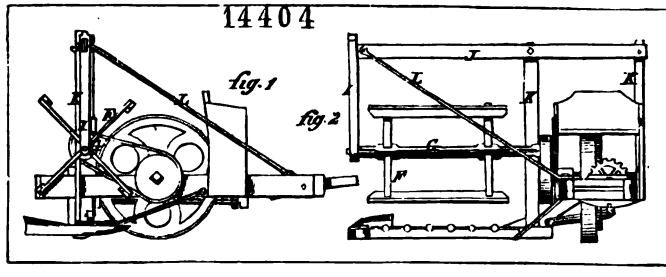

Digitized by Google

14070

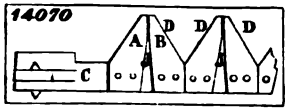

14270

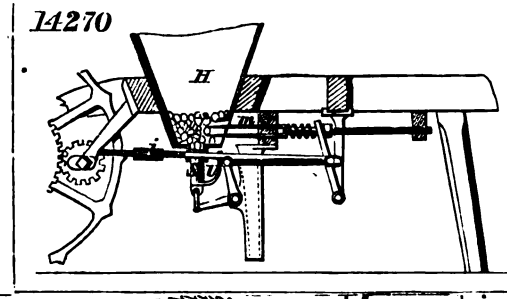

14898

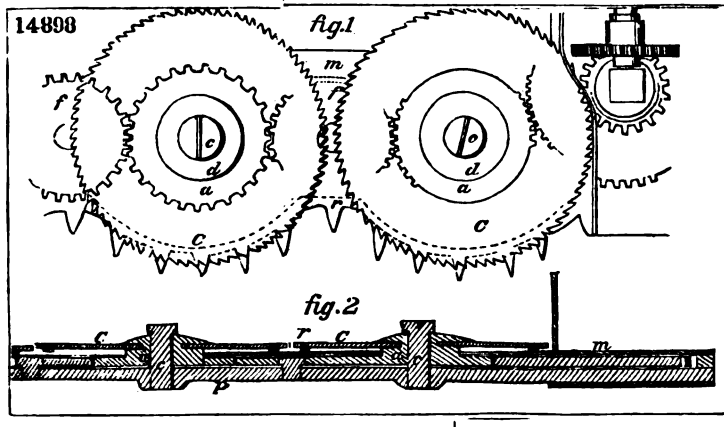

14631

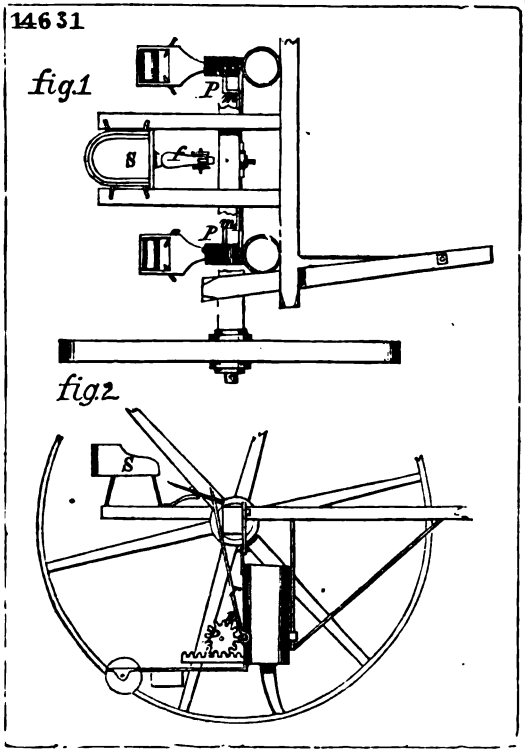

14874

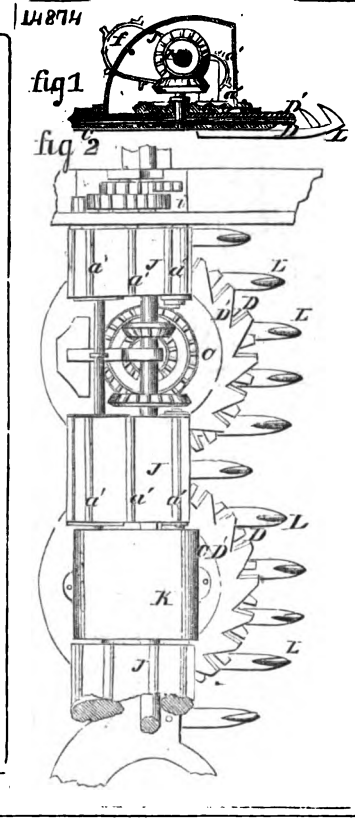

Digitized by Google

15334

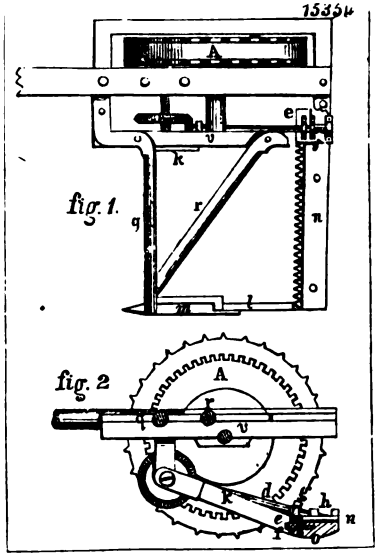

14801

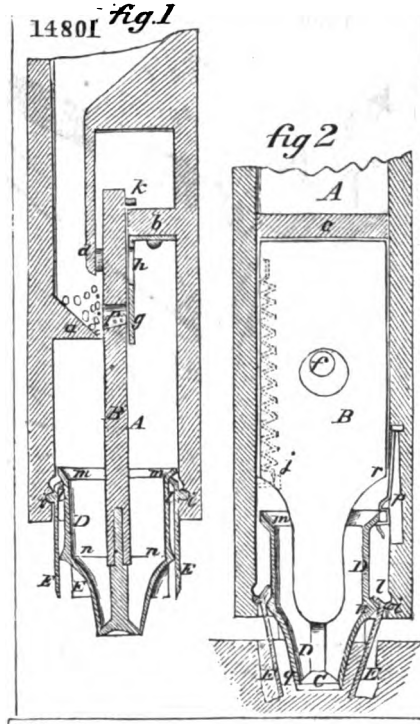

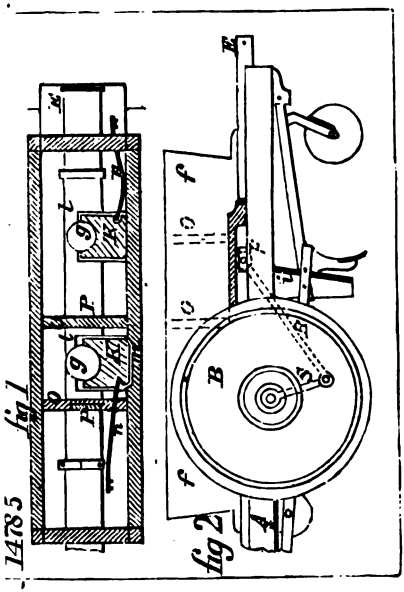

14785

16274

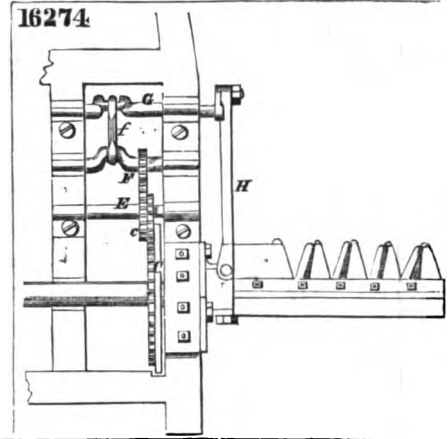

15755

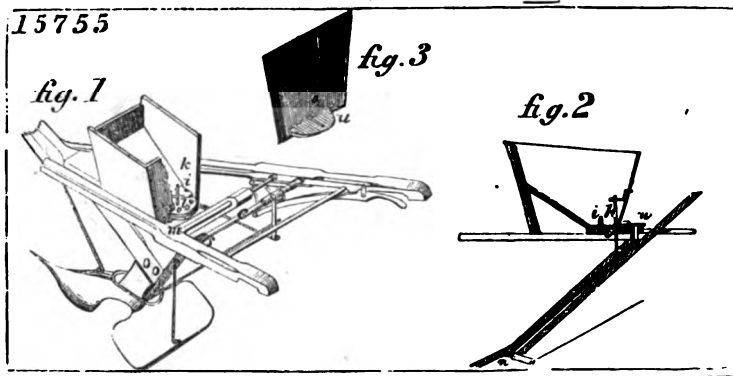

Digitized by Google

15507

fig. 1

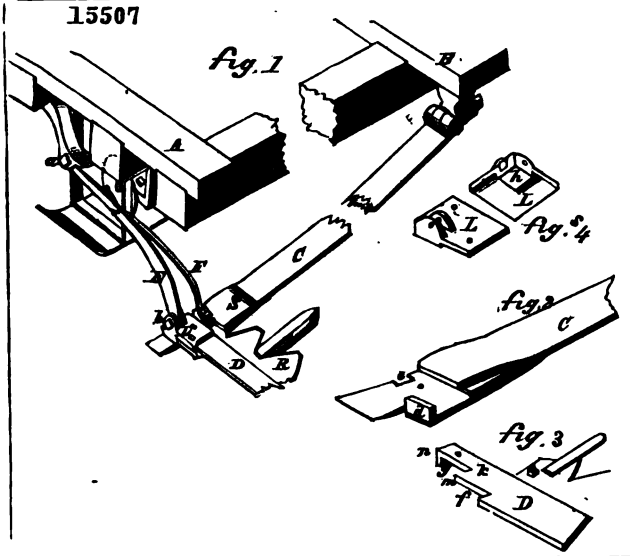

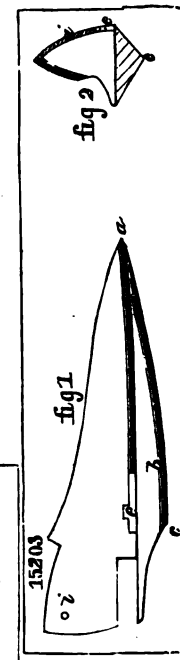

15322

fig. 1

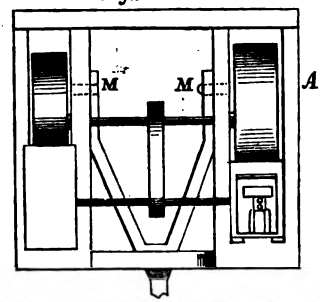

fig. 2

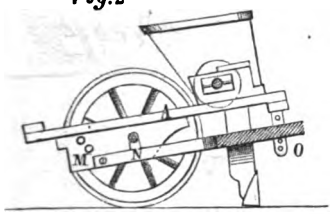

16247

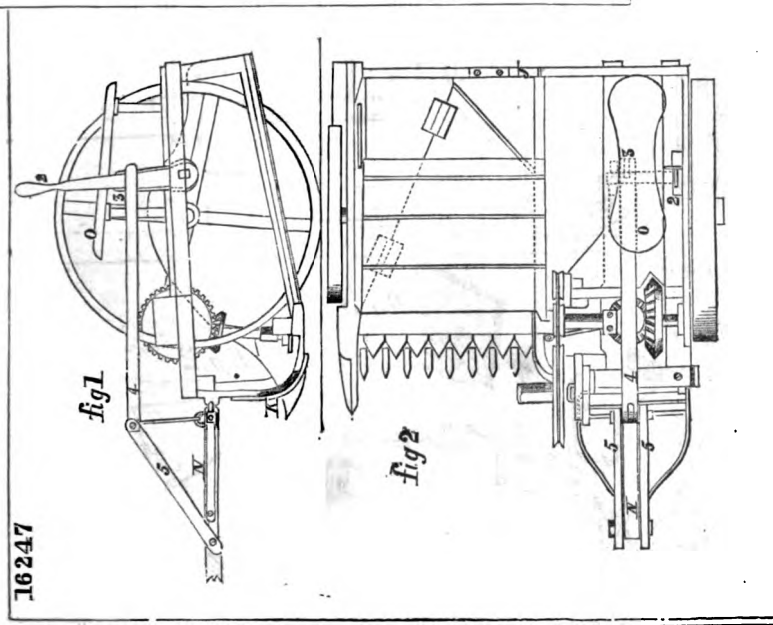

Digitized by Google

14134

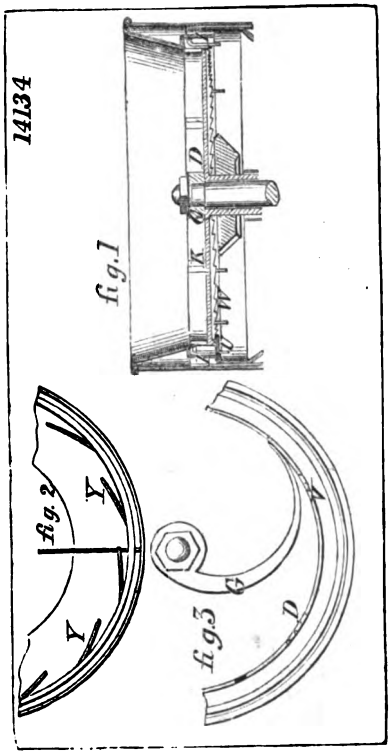

15338

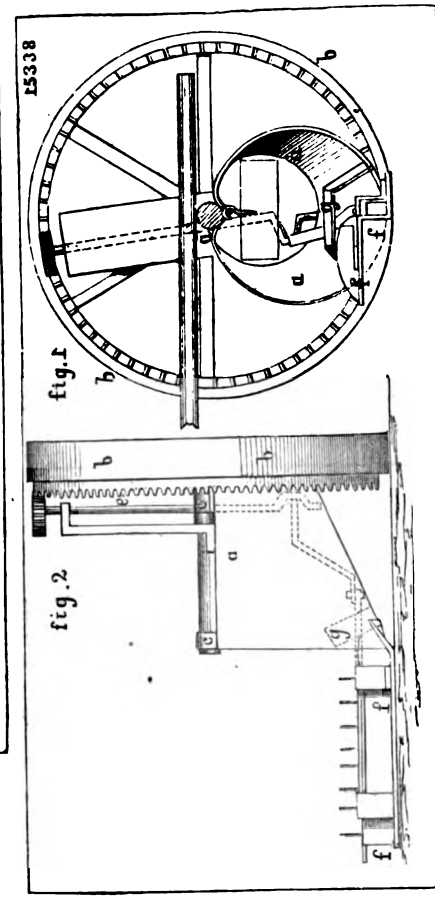

14529.

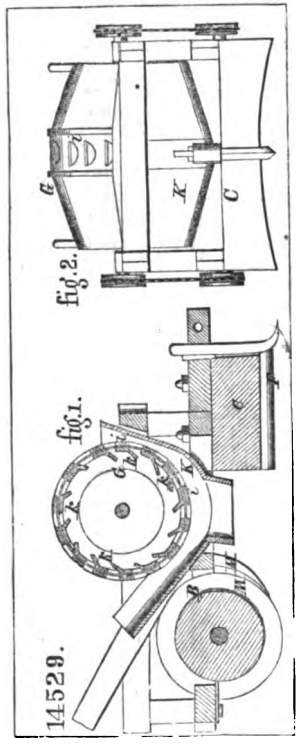

15426

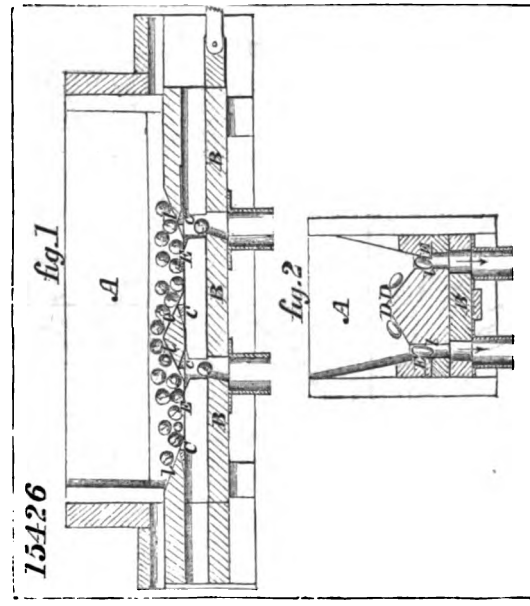

Digitized by Google

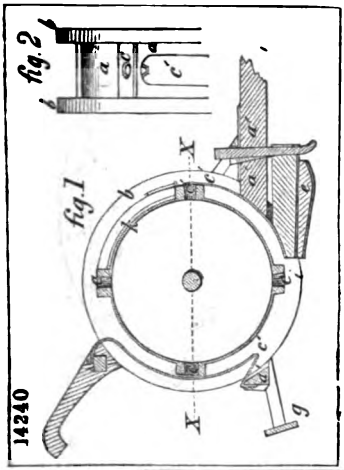

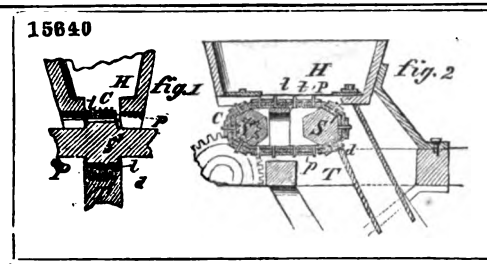

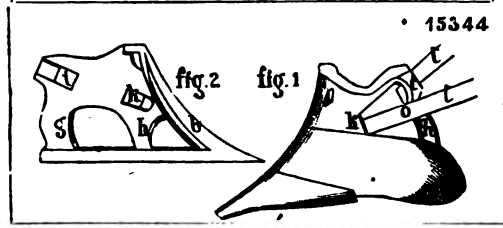

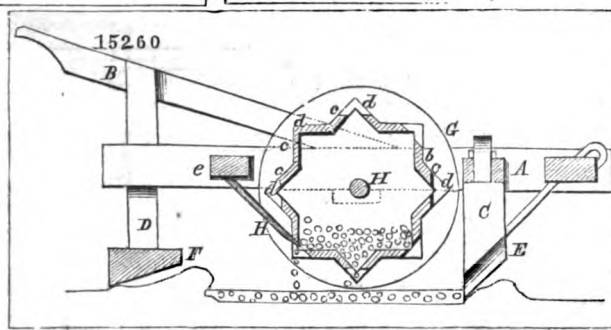

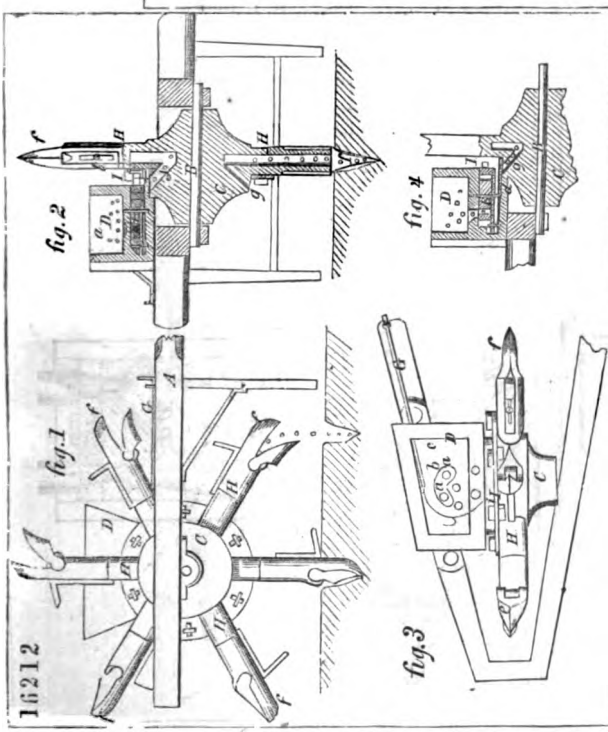

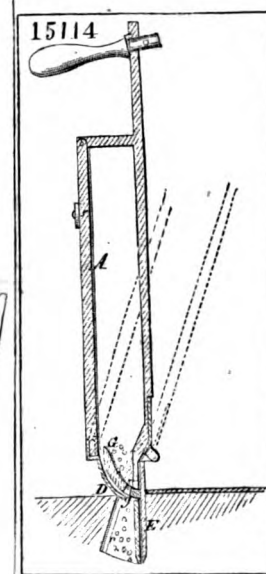

Digitized by Google

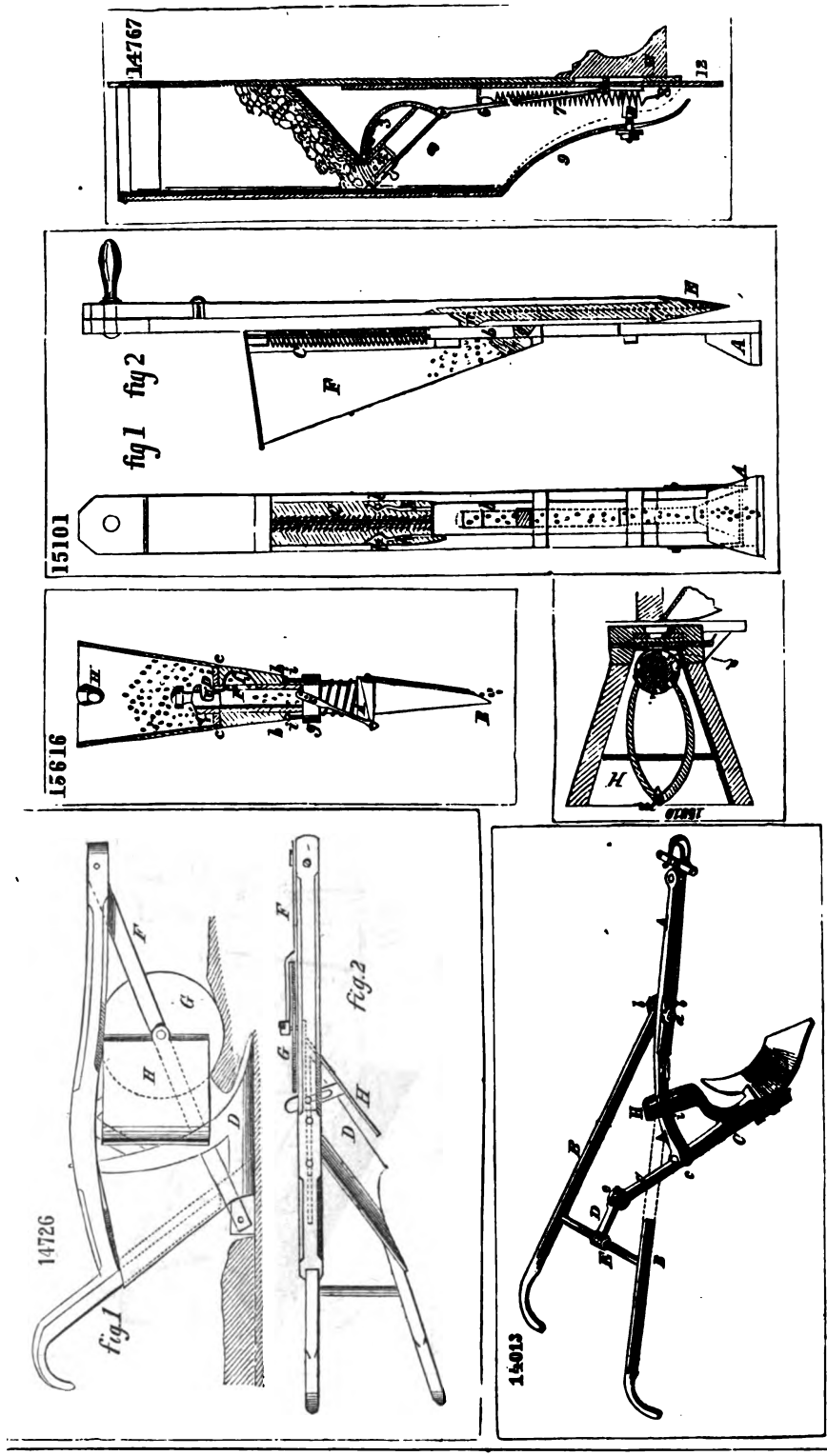

Digitized by Google

16314

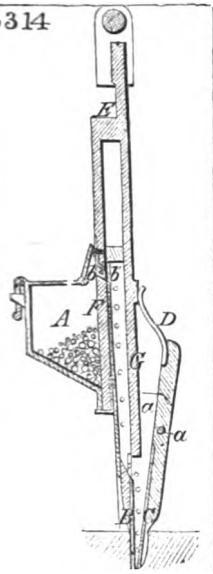

15918

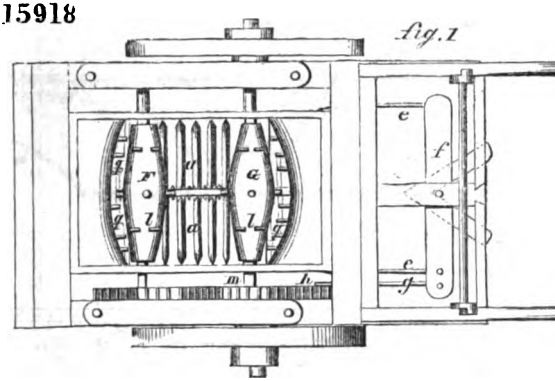

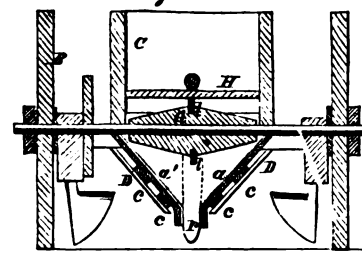

14504

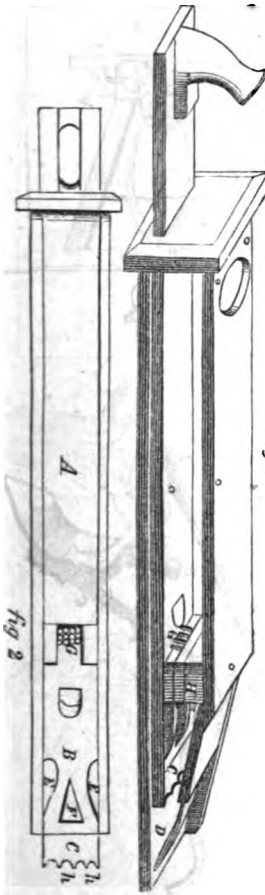

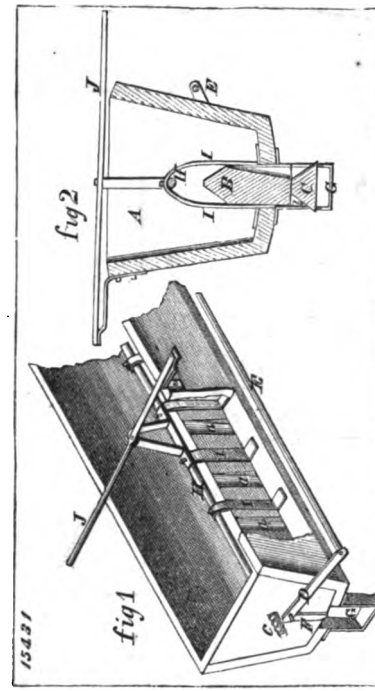

Digitized by Google

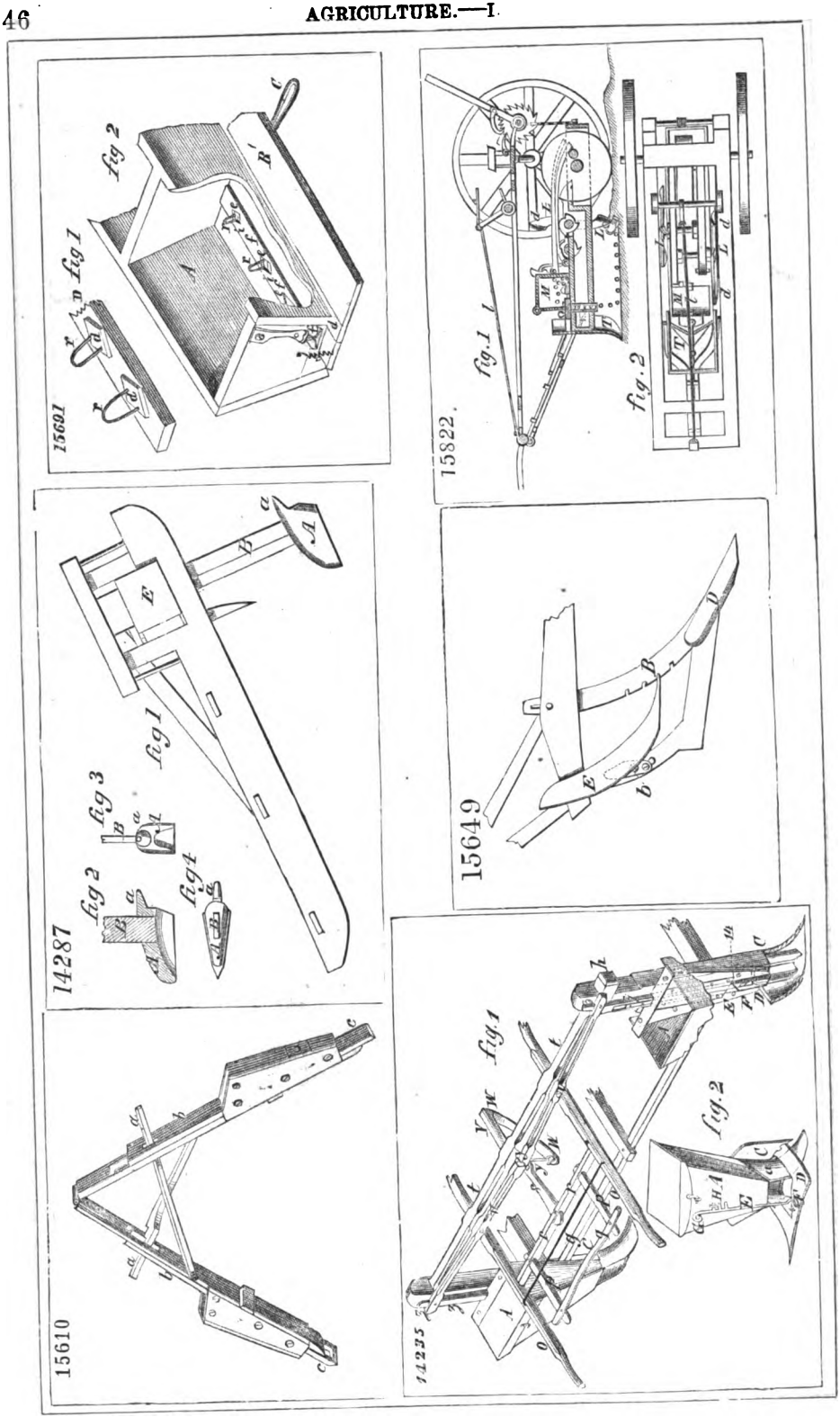

Digitized by Google

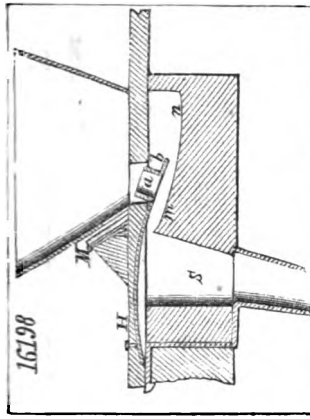

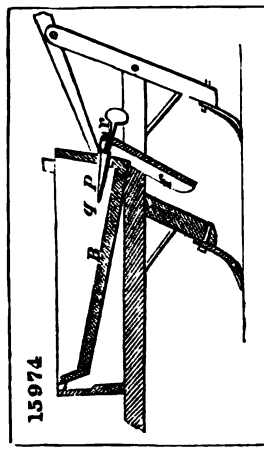

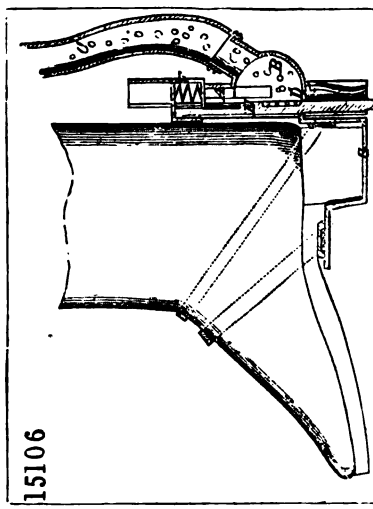

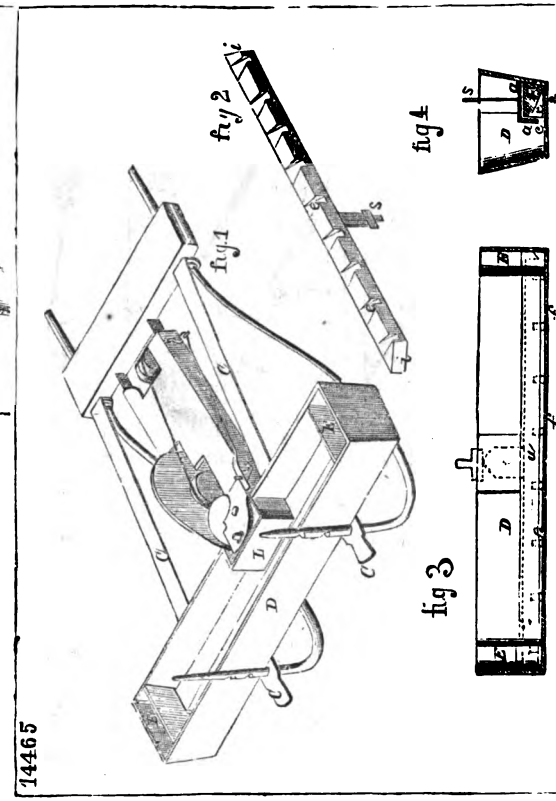

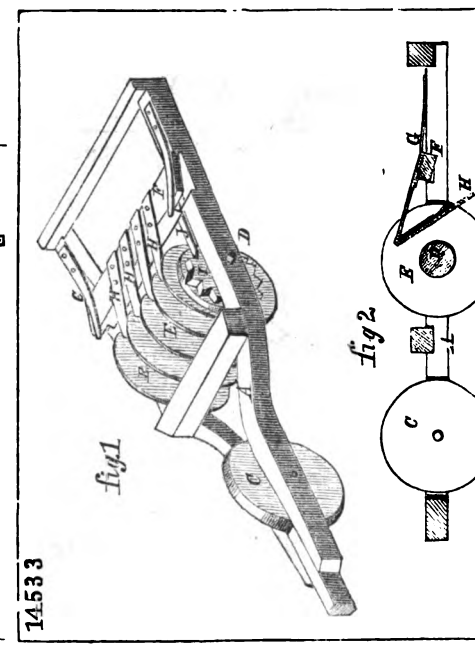

Digitized by Google

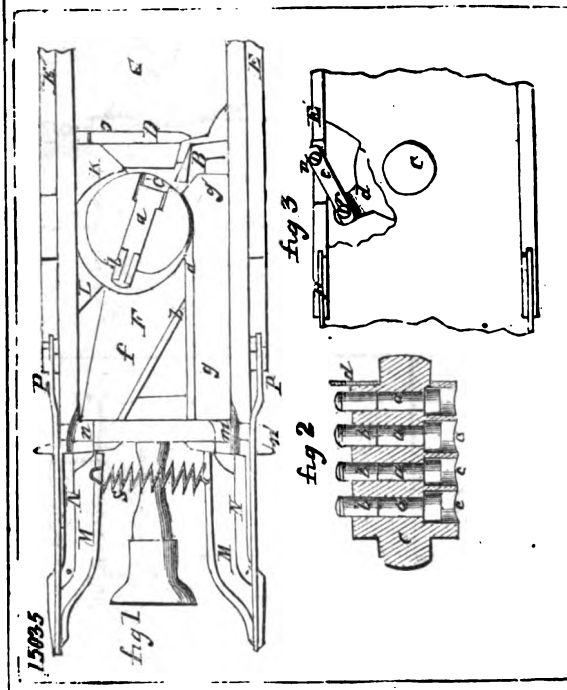

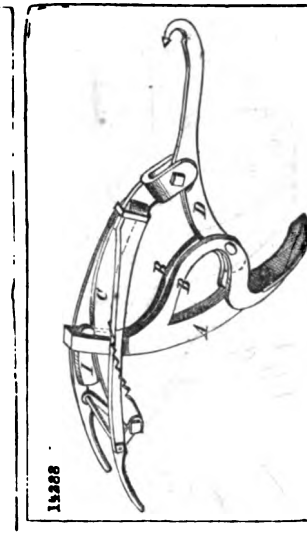

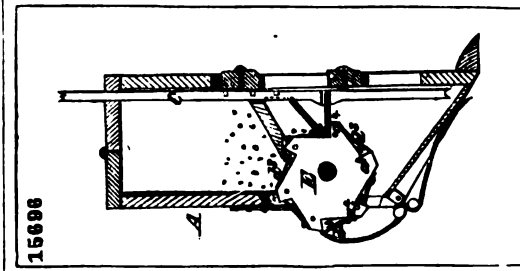

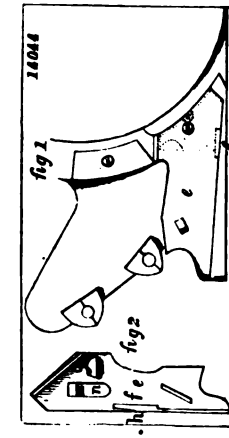

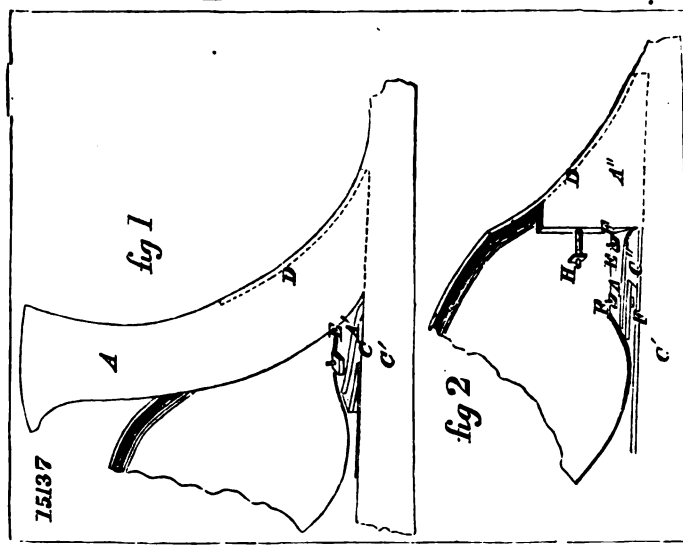

Digitized by Google

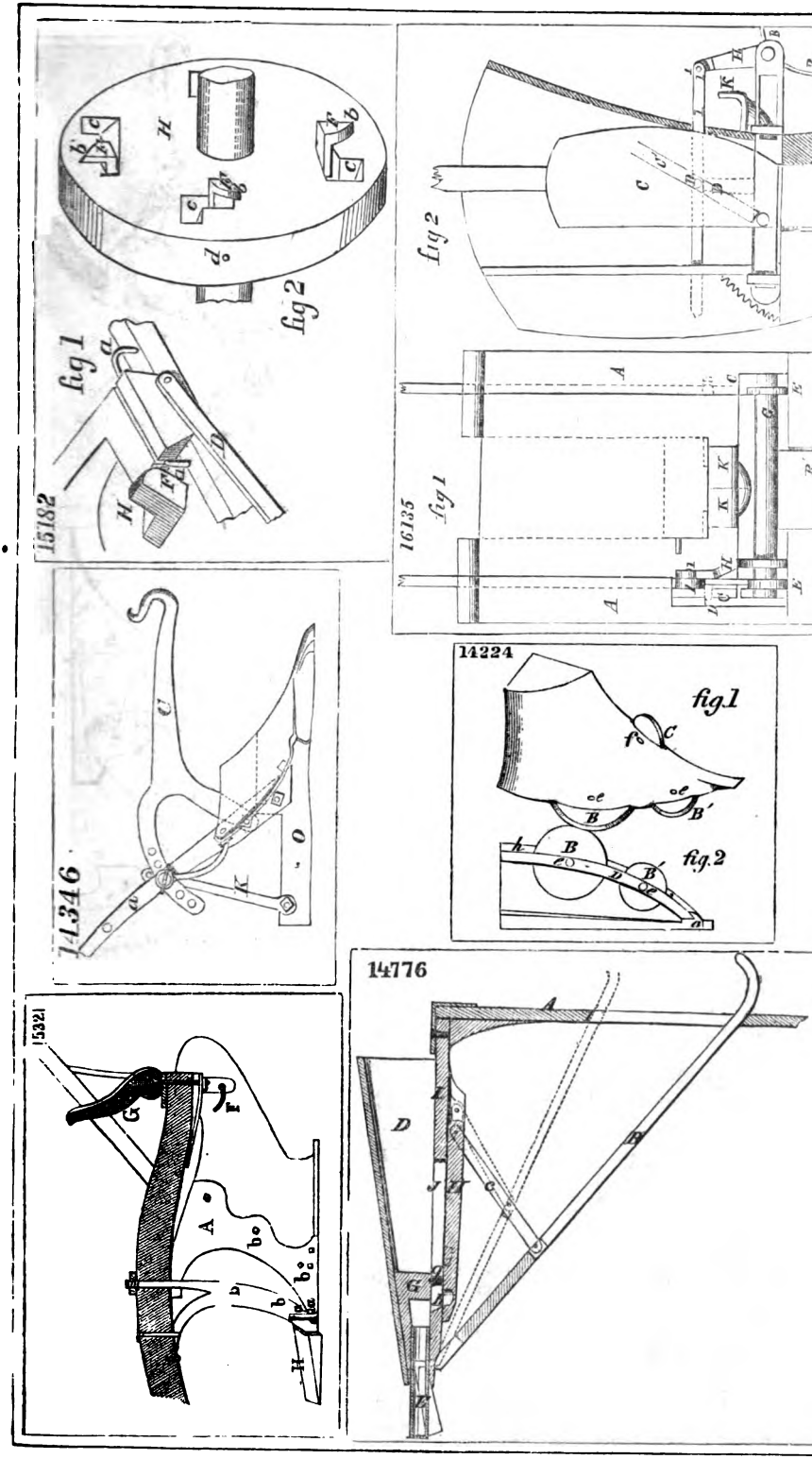

Digitized by Google

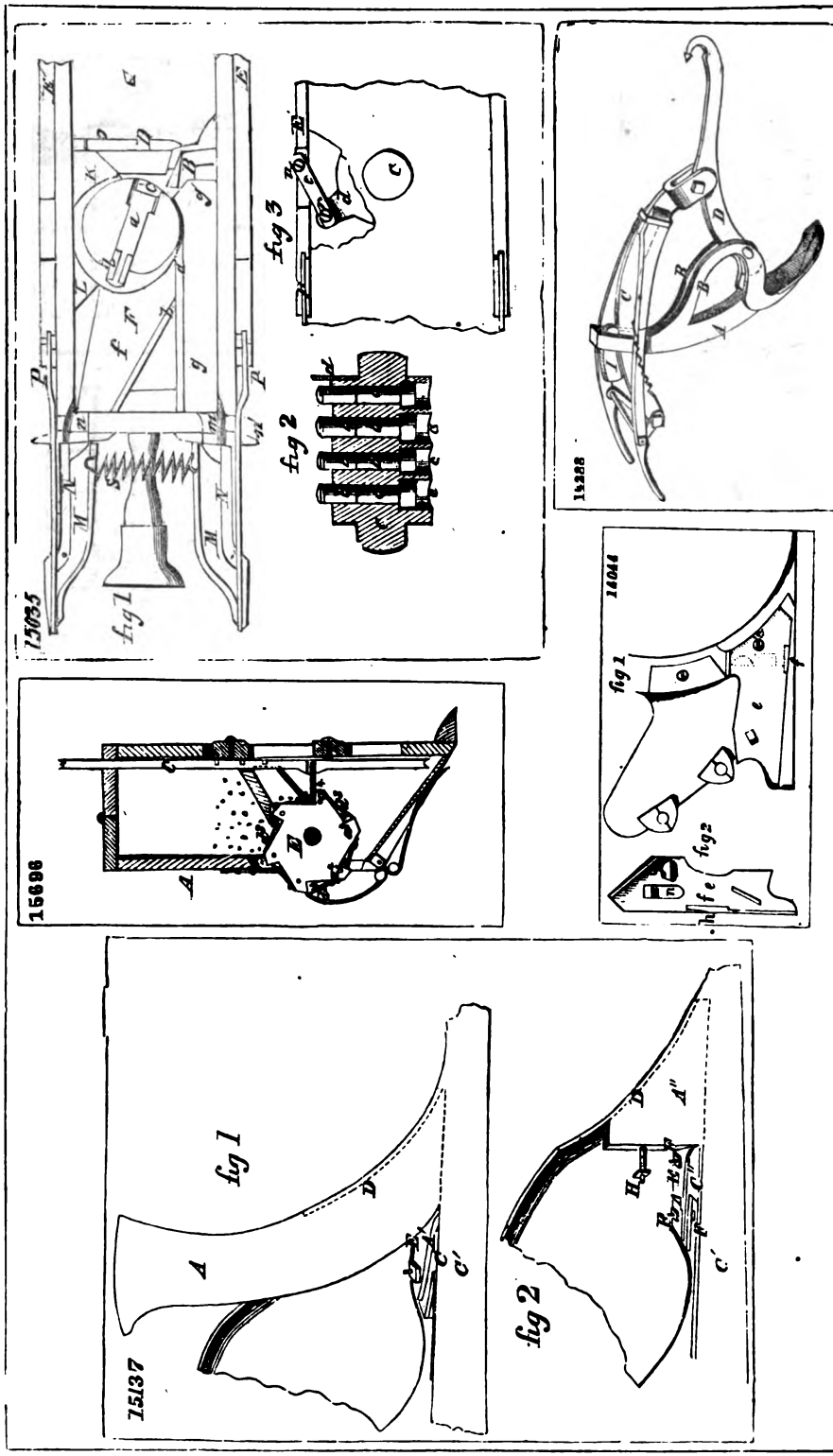
15035
fig 1
fig 2
fig 3
15288
15696
14041
fig 1
fig 2
15137
fig 1
fig 2

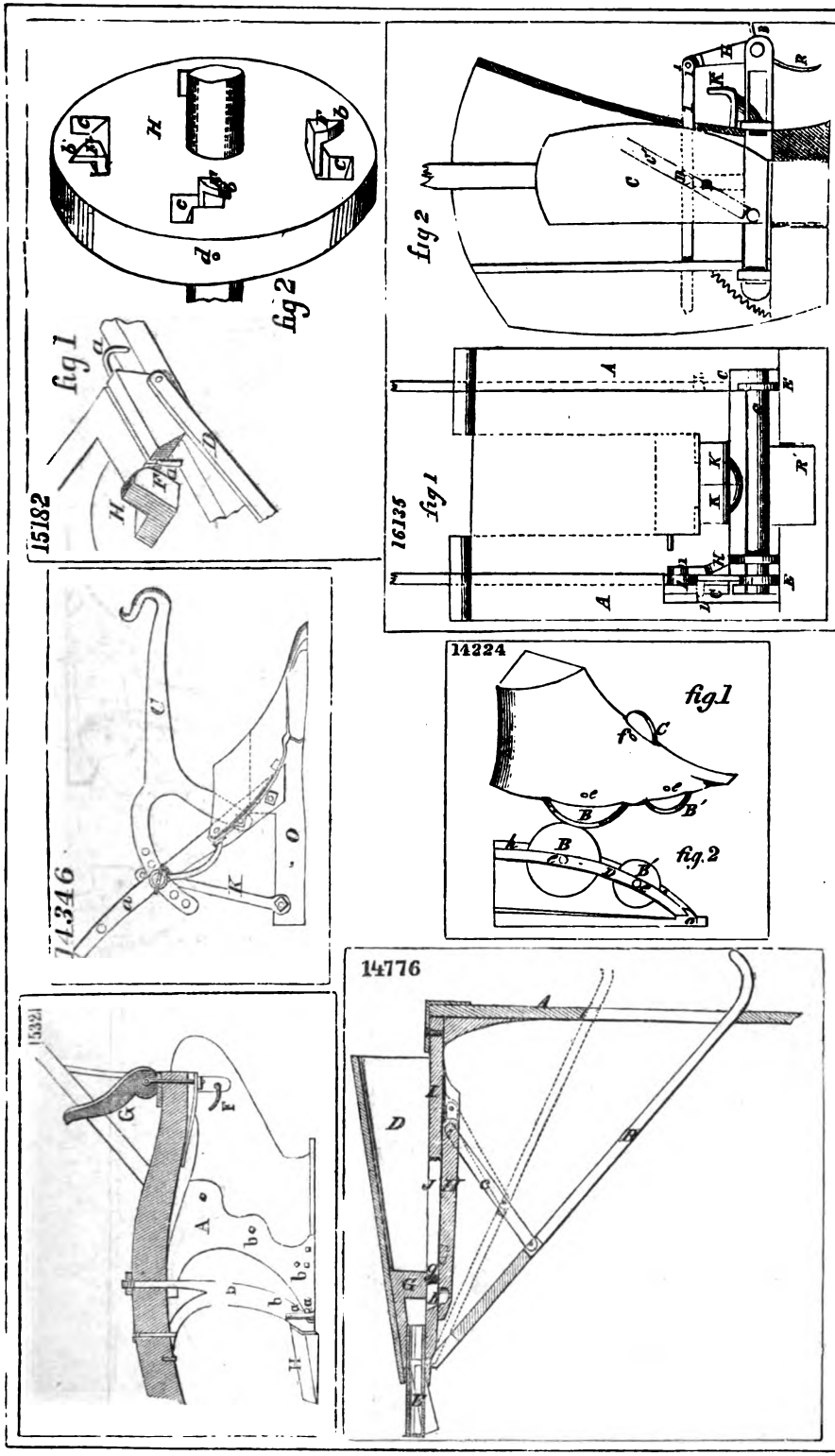

Digitized by Google

16218

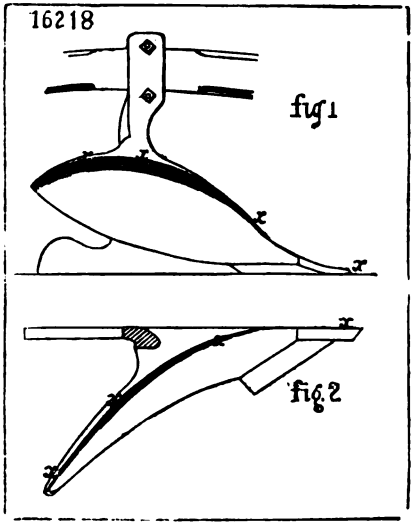

15654

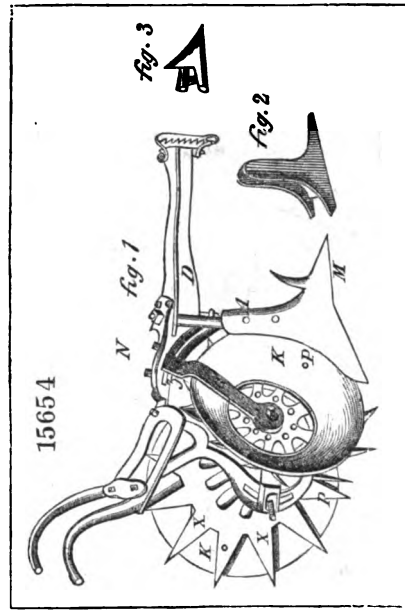

14989

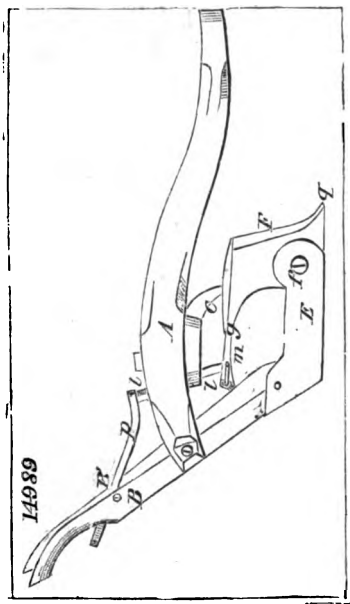

16277

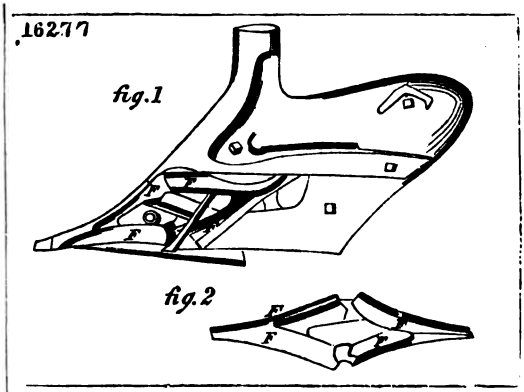

15955

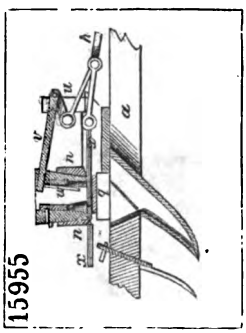

15887

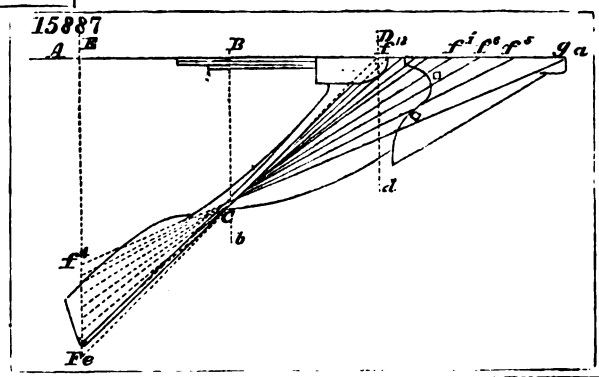

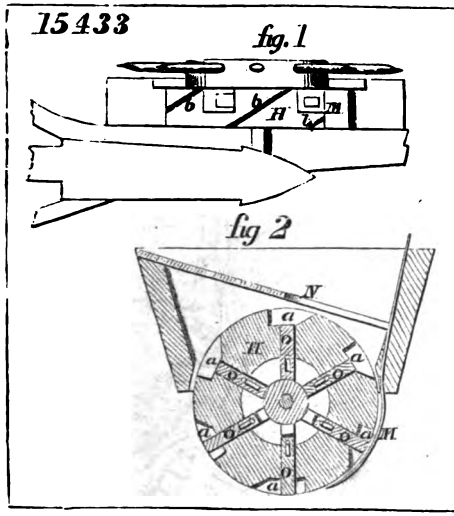

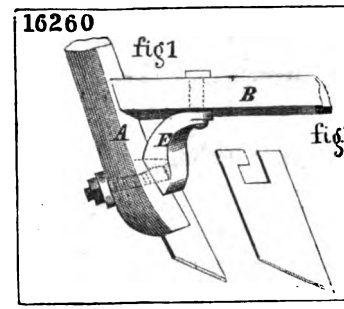

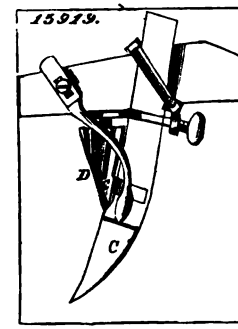

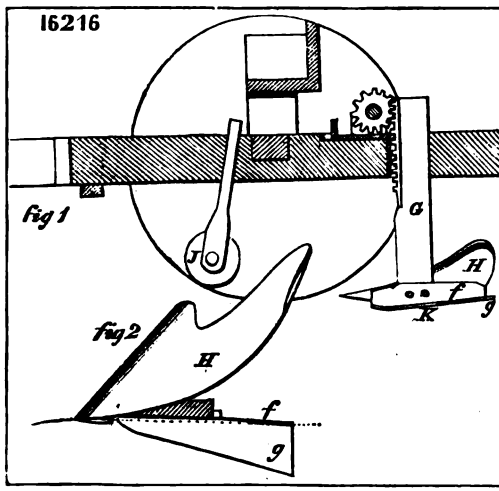

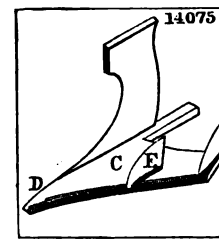

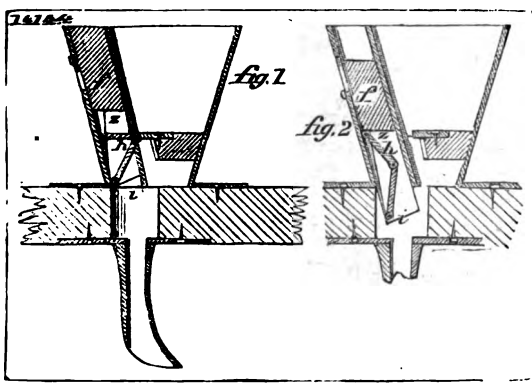

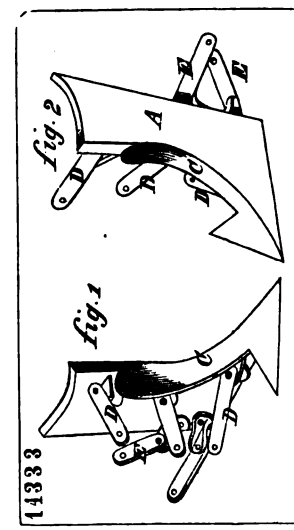

Digitized by Google

15628

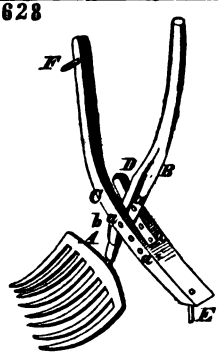

15039

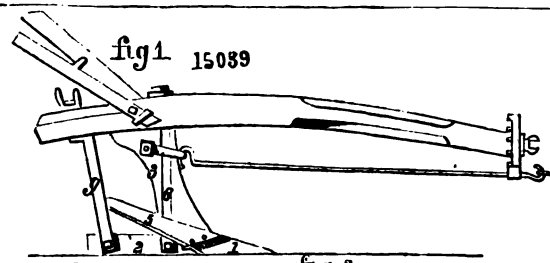

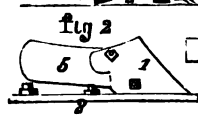

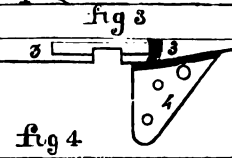

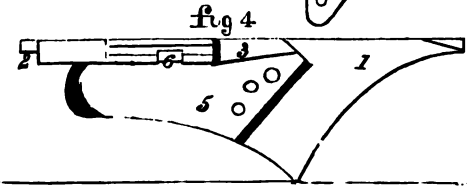

16025

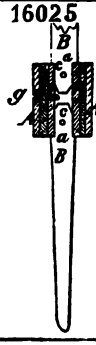

14373

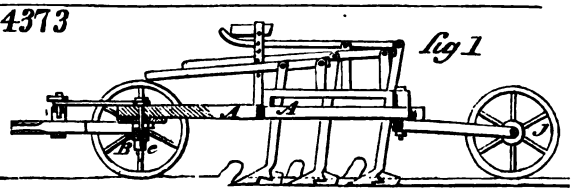

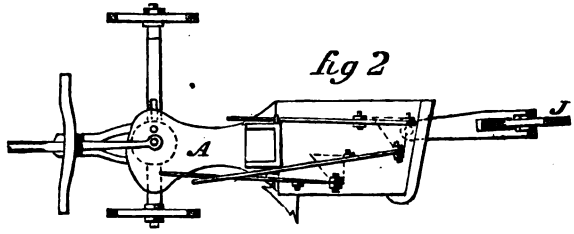

14321

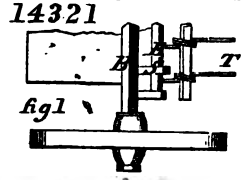

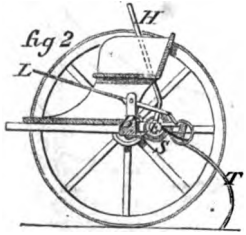

15653

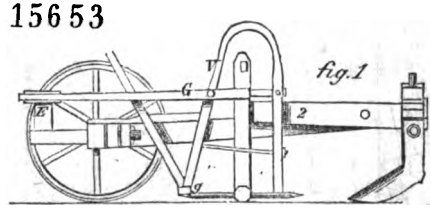

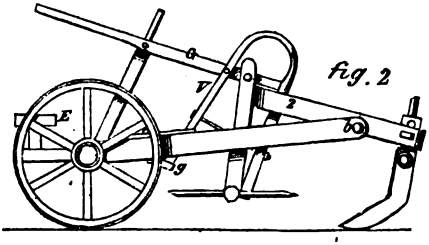

Digitized by Google

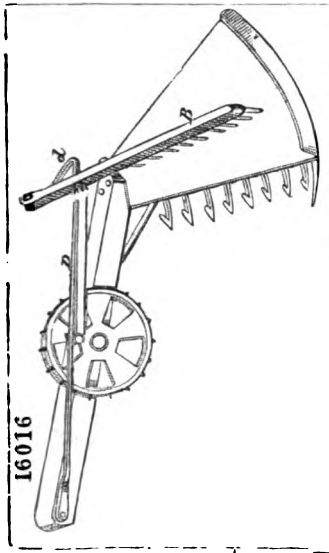
16016

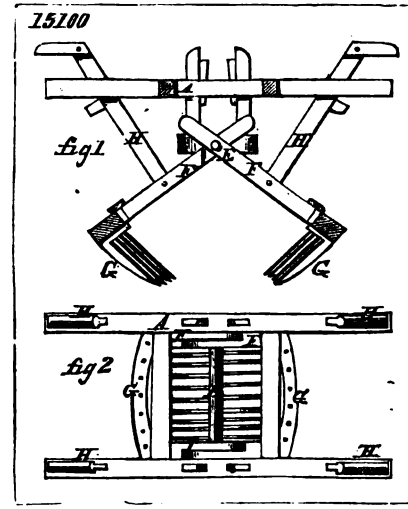

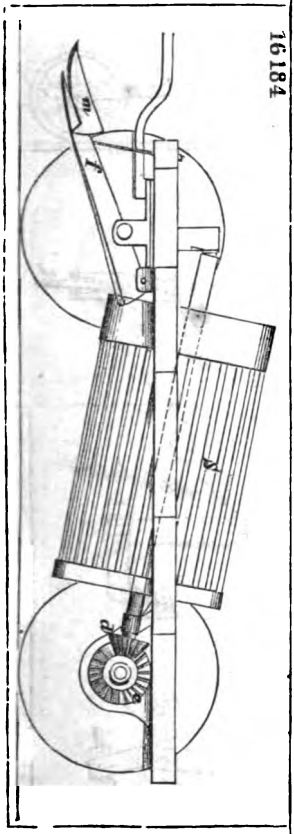
16184

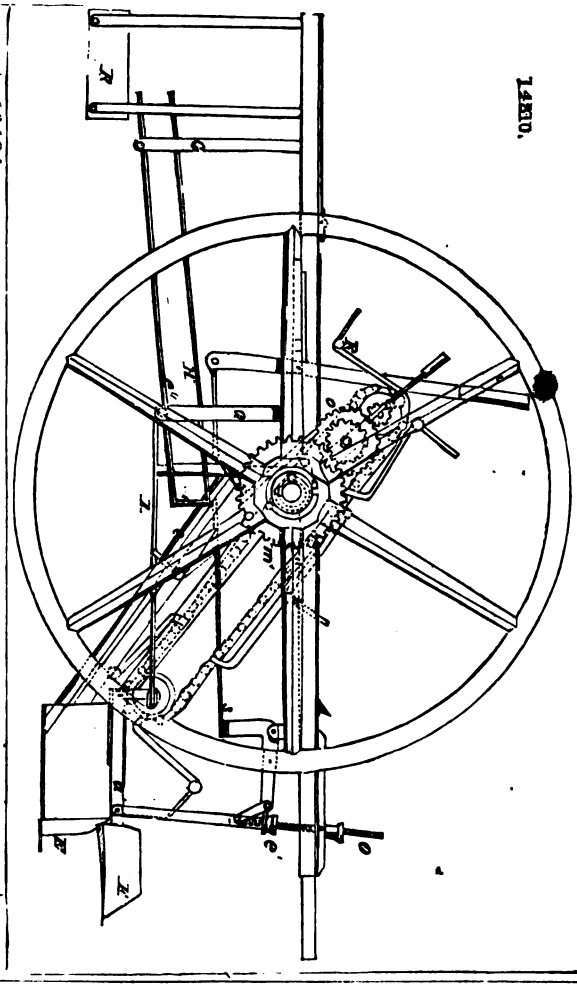
14510.

Digitized by Google

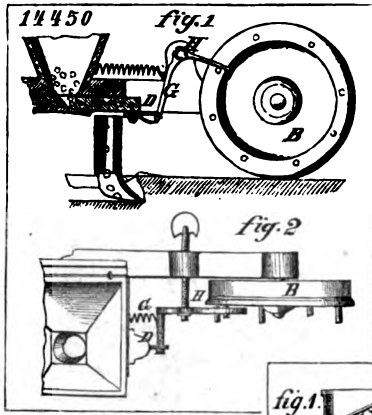

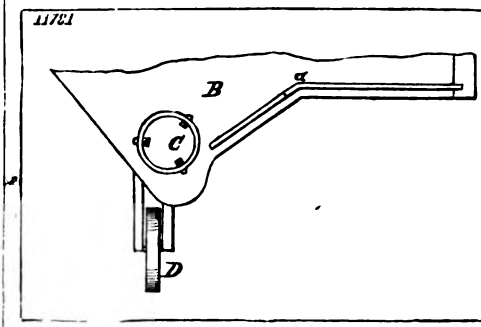

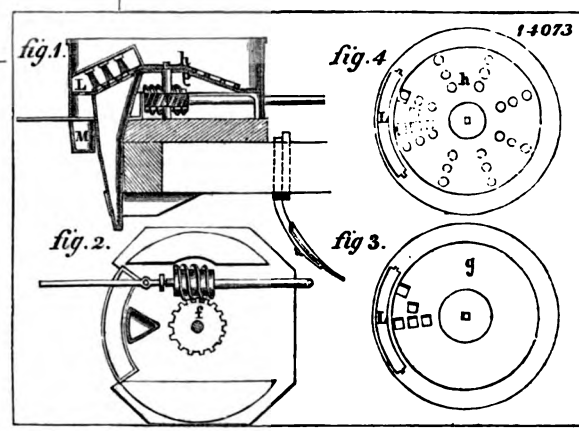

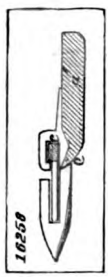

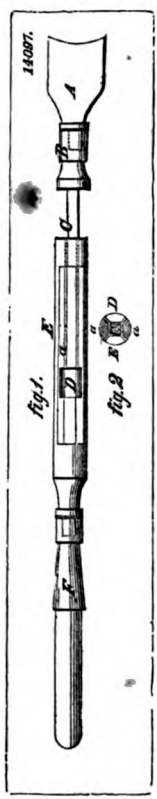

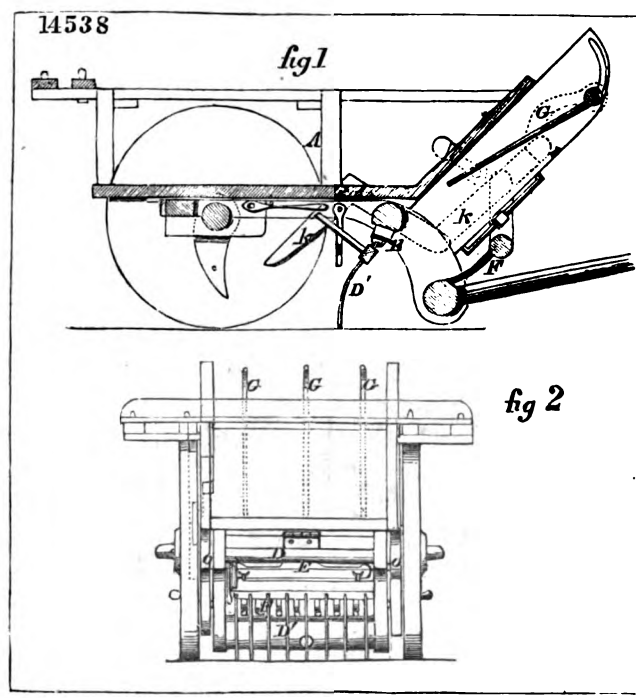

Digitized by Google

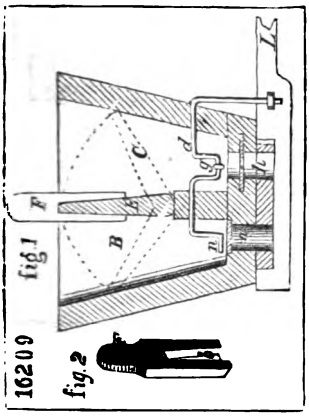

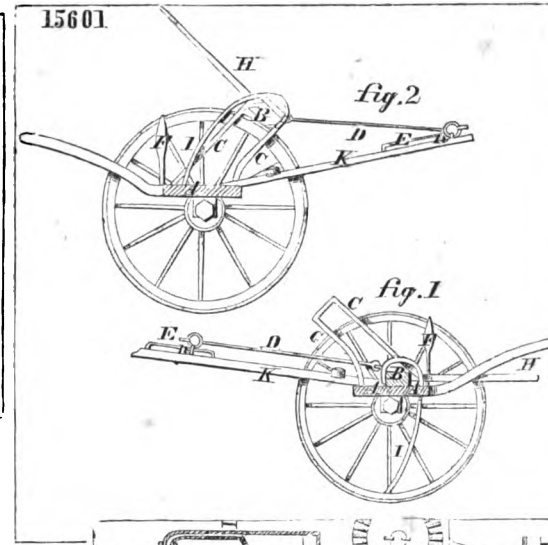

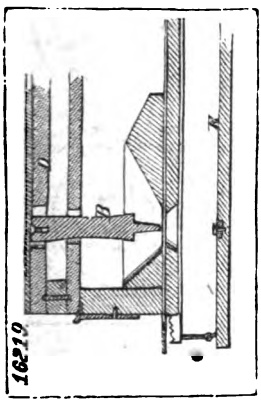

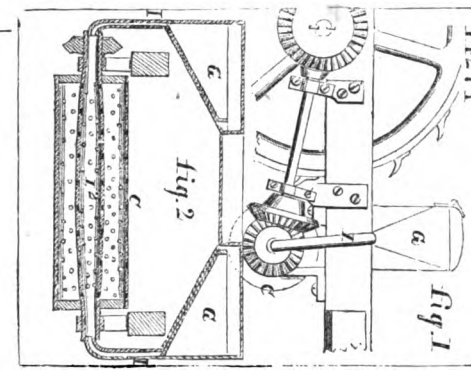

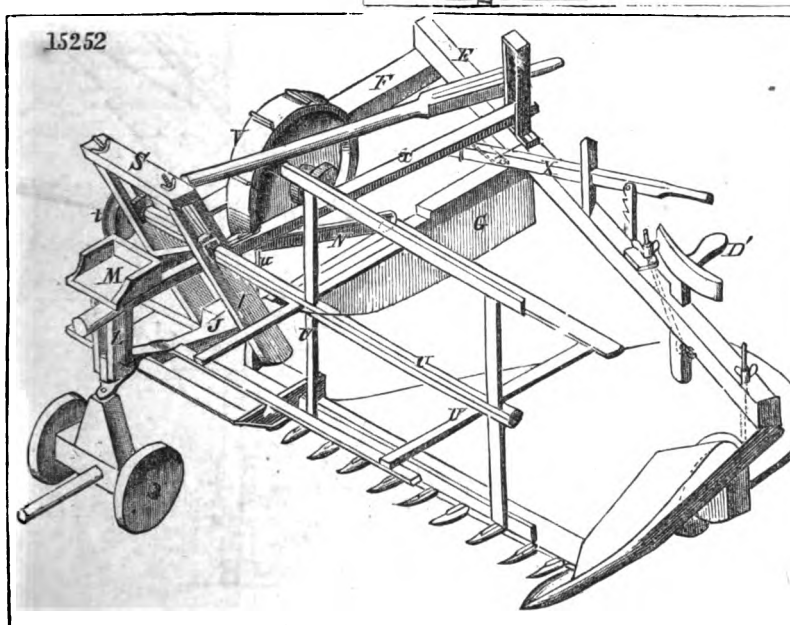

Digitized by Google

15655

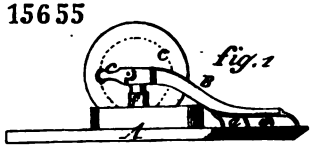

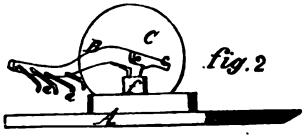

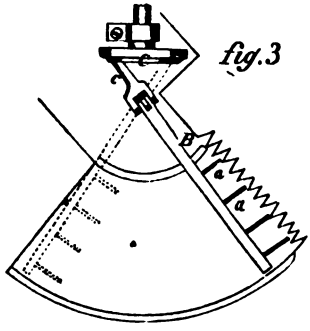

16318

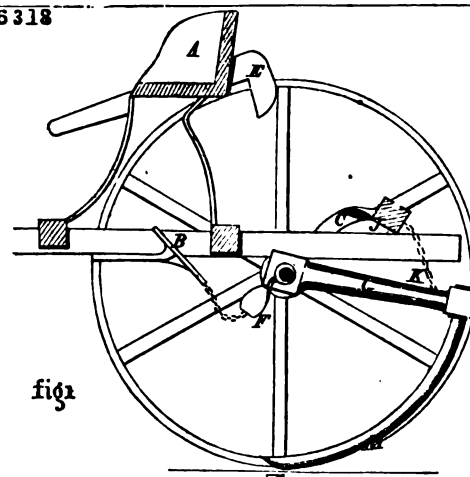

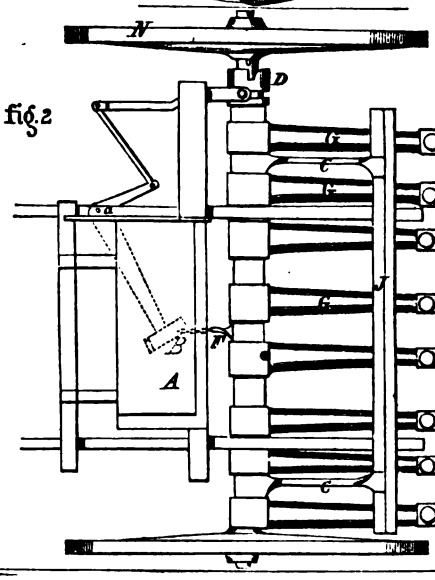

15774

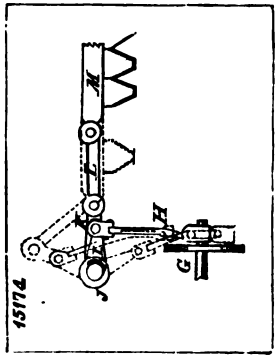

16183

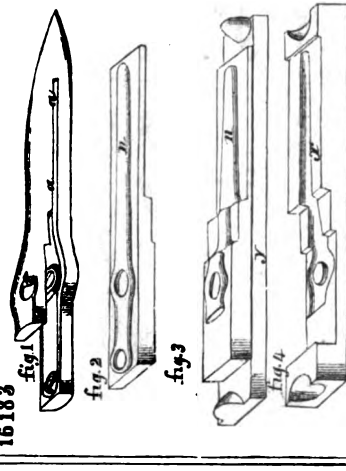

15777

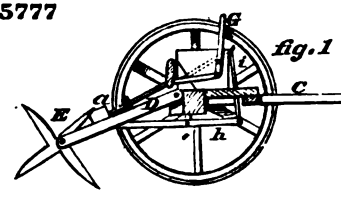

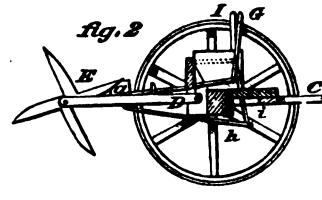

Digitized by Google

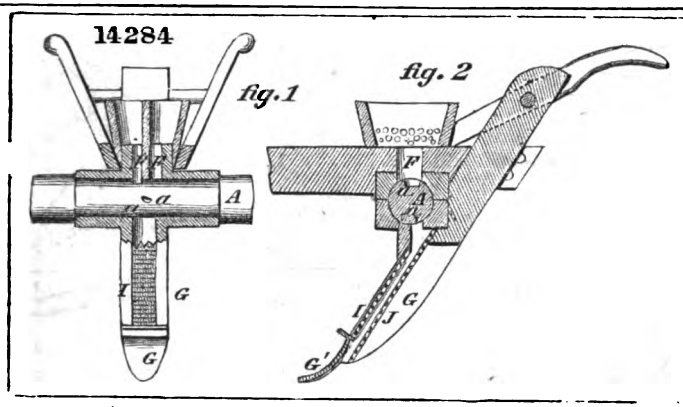

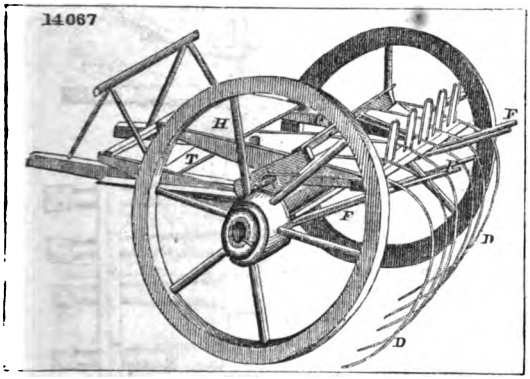

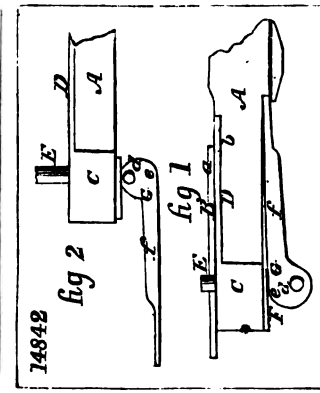

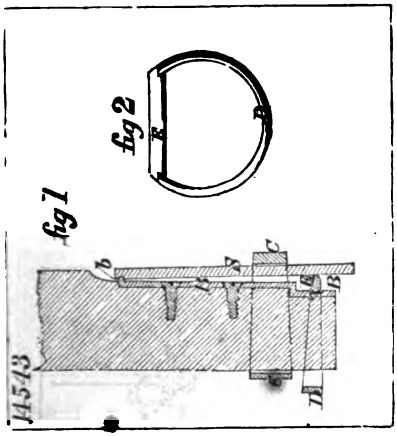

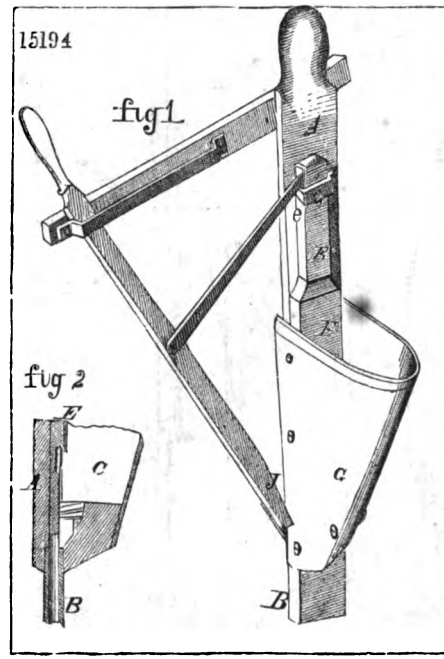

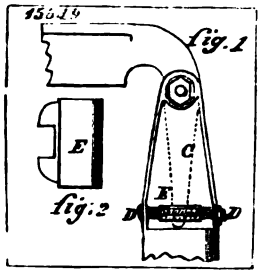

Digitized by Google

16156

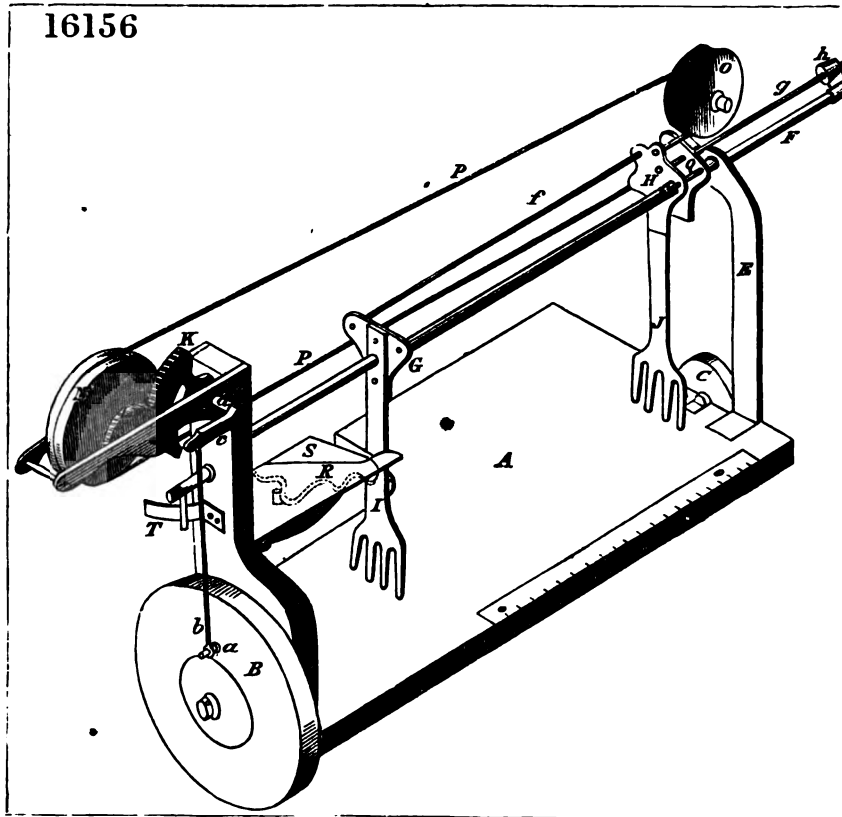

16145

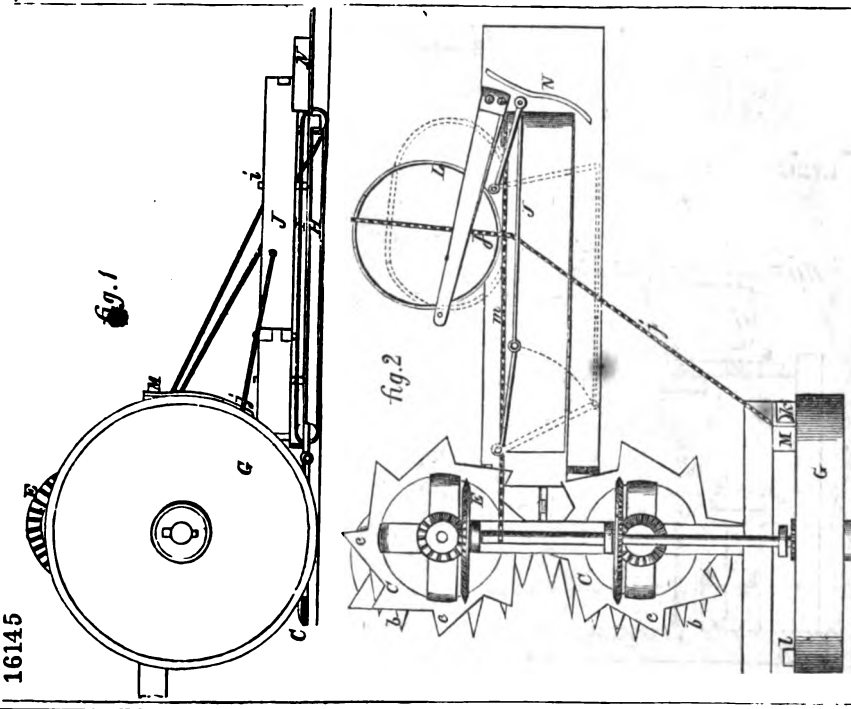

Digitized by Google

14840

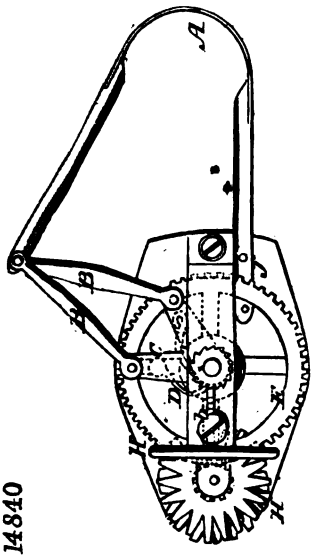

14570

Fig 3

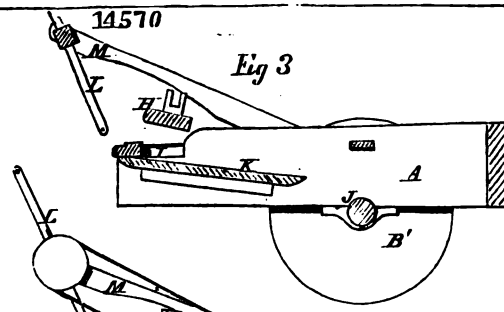

Fig 1

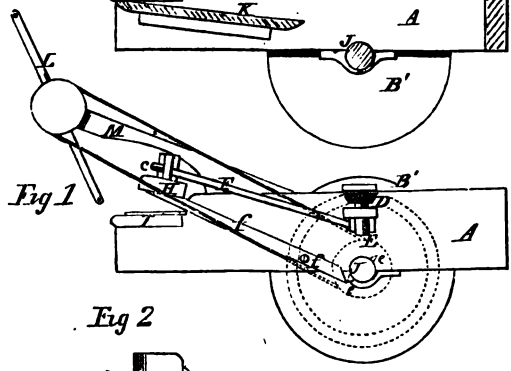

Fig 2

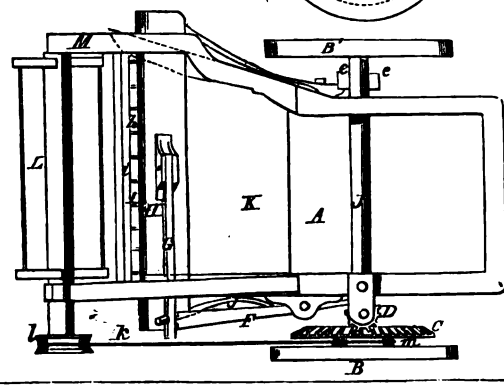

15237

fig.1

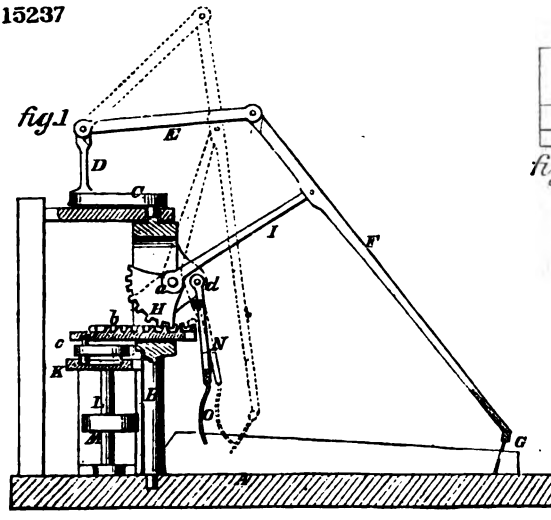

fig.2

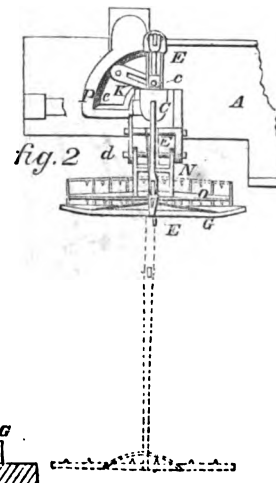

Digitized by Google

14517

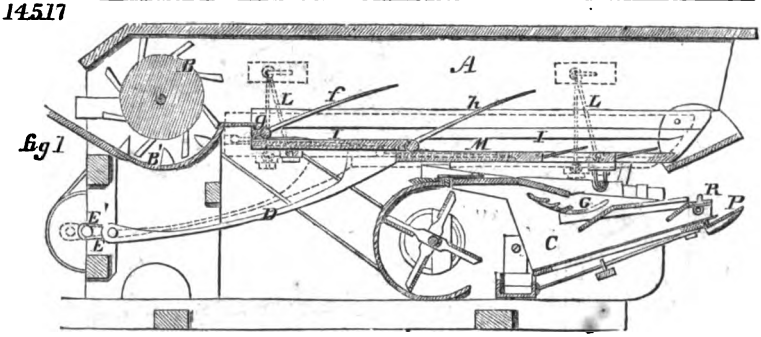

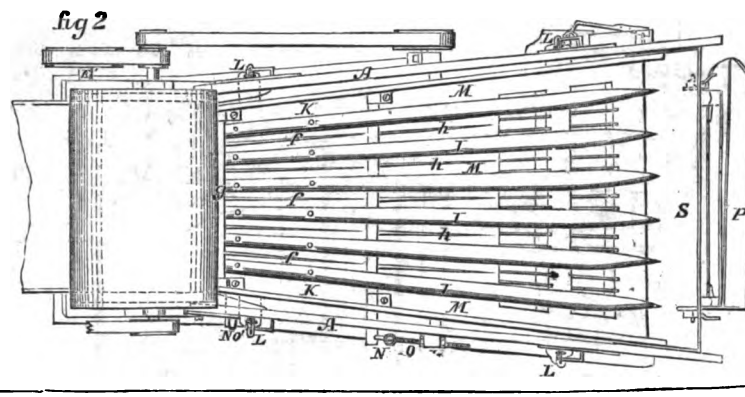

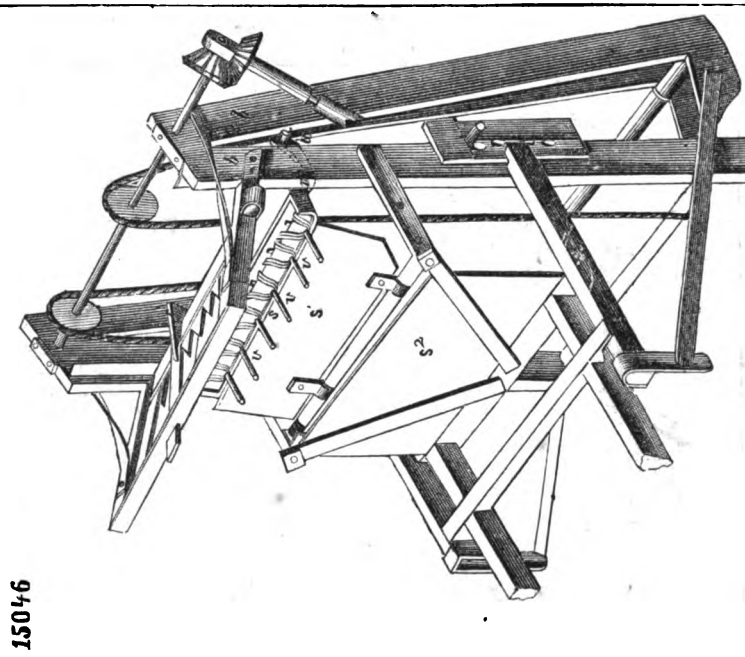

15046

14703

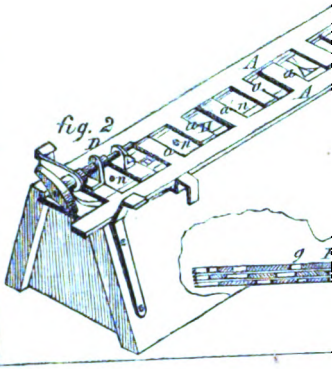

15044

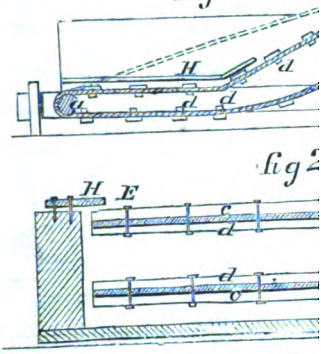

15096

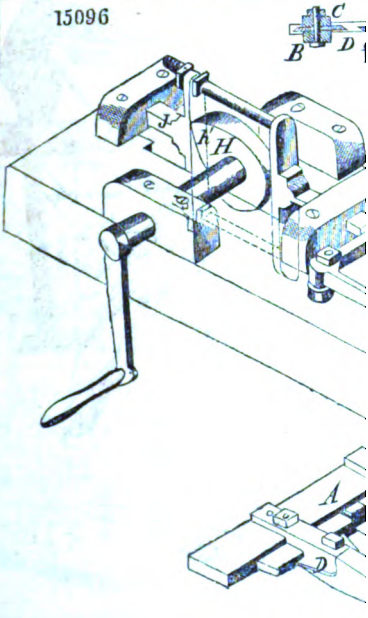

Digitized by Google

14540

fig.1

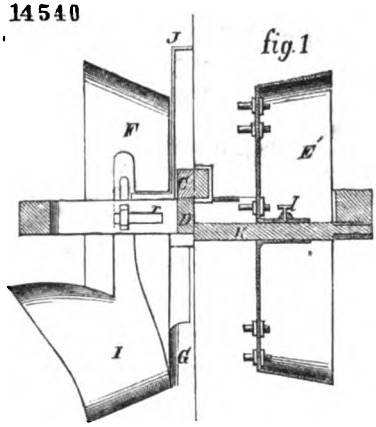

fig.3

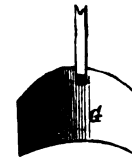

fig.2

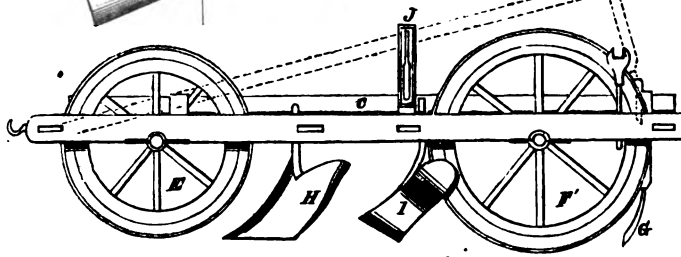

fig.4

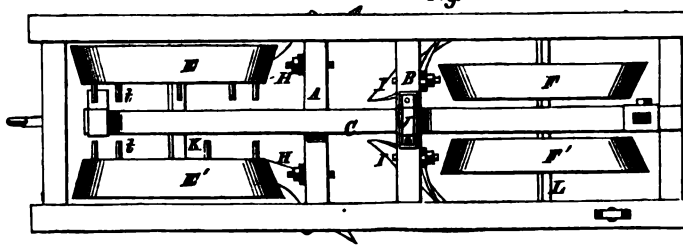

15796

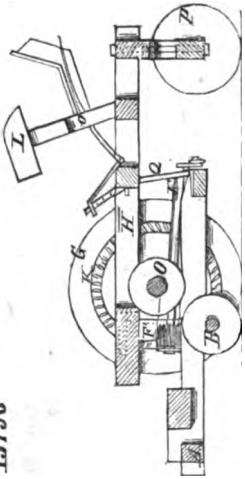

16251

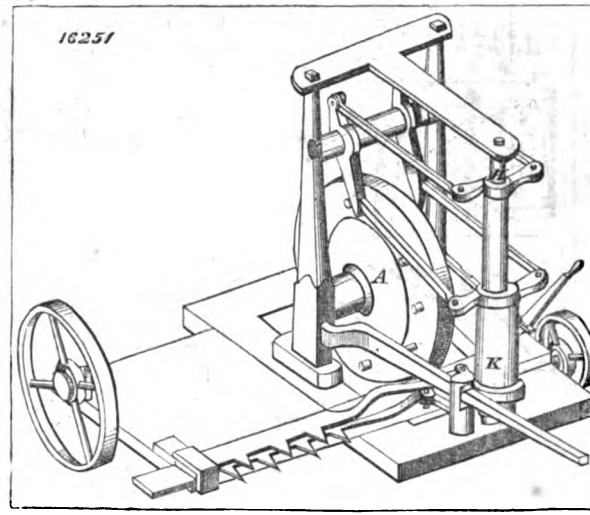

Digitized by Google

15674

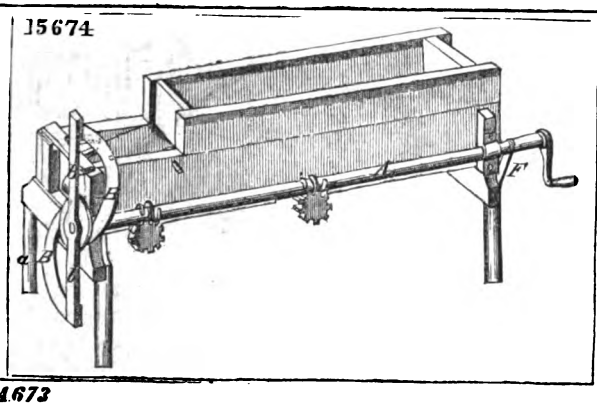

14673

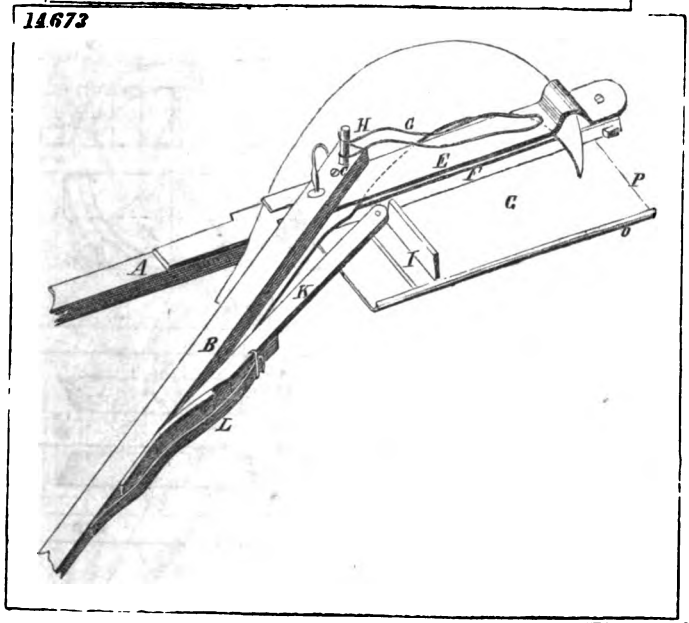

15485

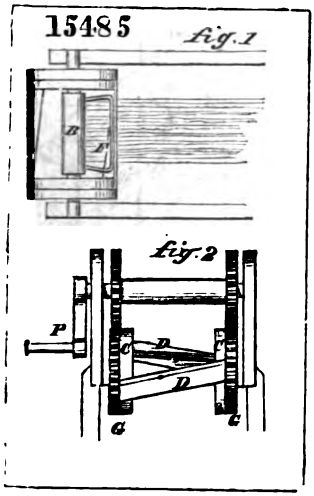

15108

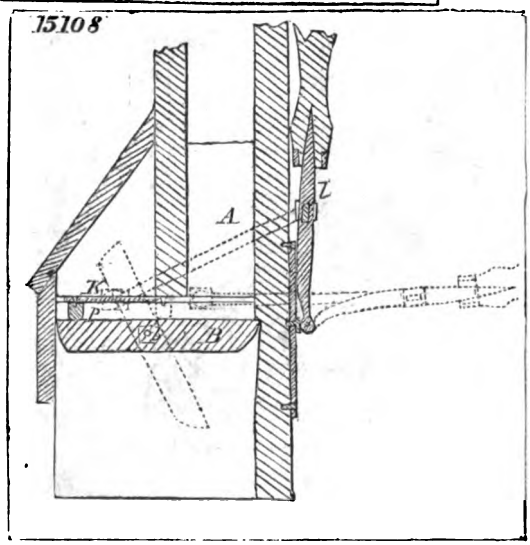

Digitized by Google

14837

fig. 1

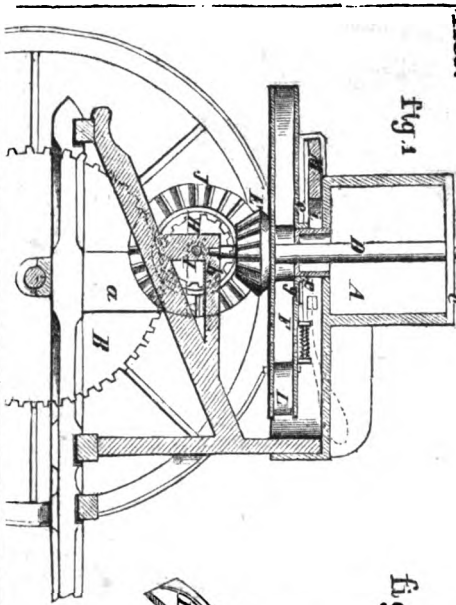

14707

fig. 2

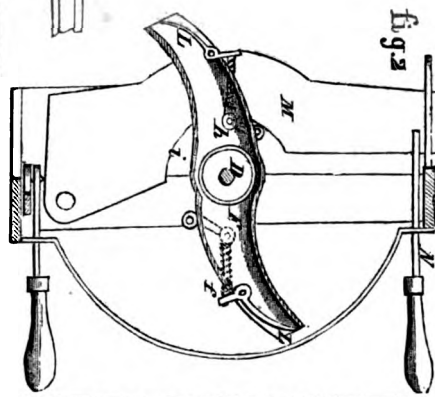

15199

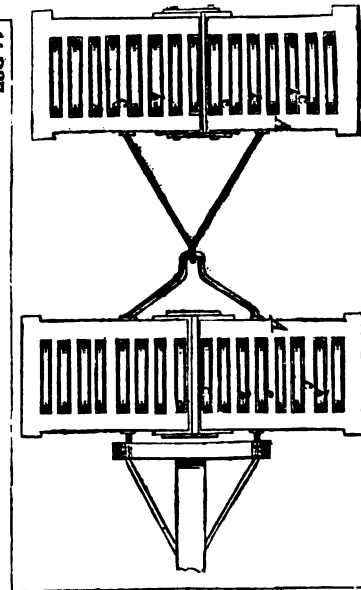

14354

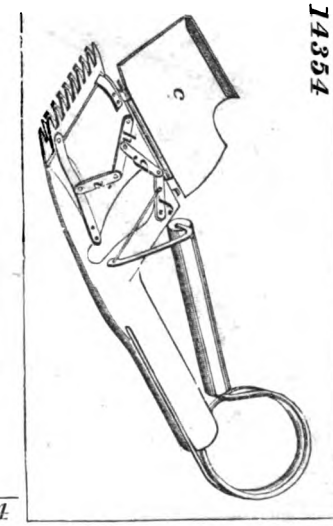

15104

fig. 1

fig. 2

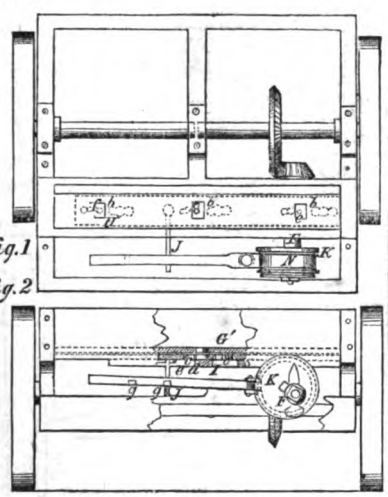

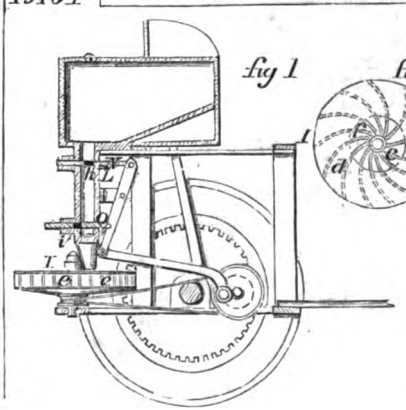

Digitized by Google

14116

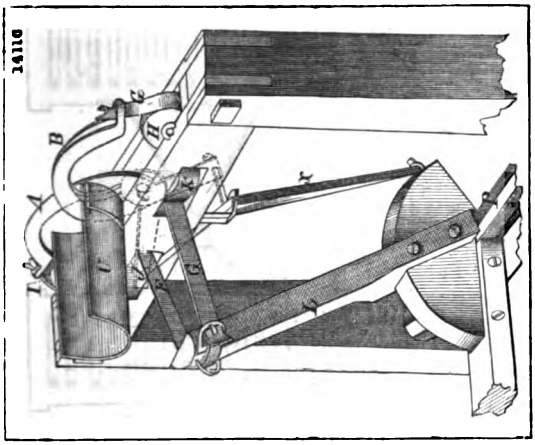

15948

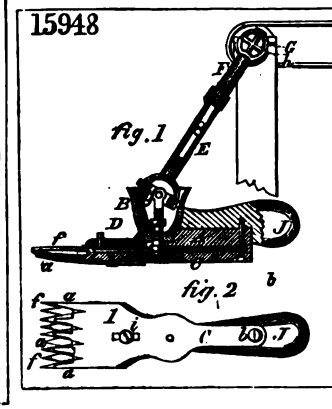

14629

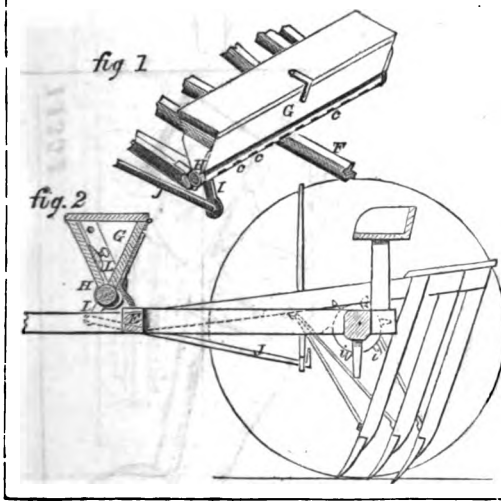

16264

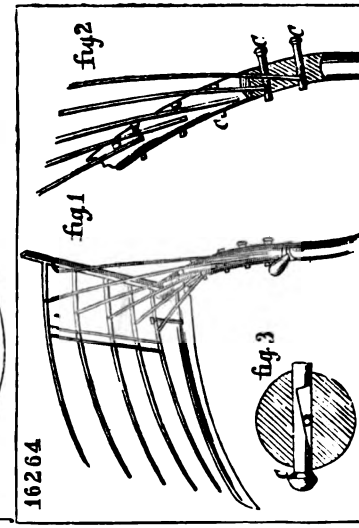

12410

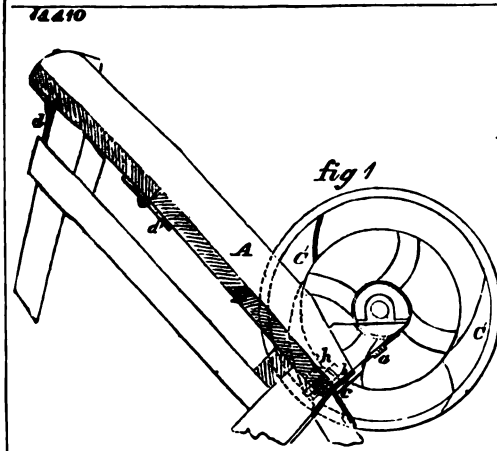

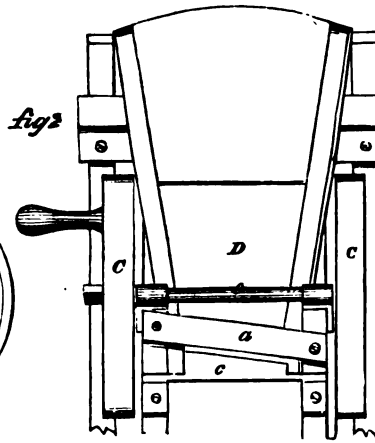

Digitized by Google

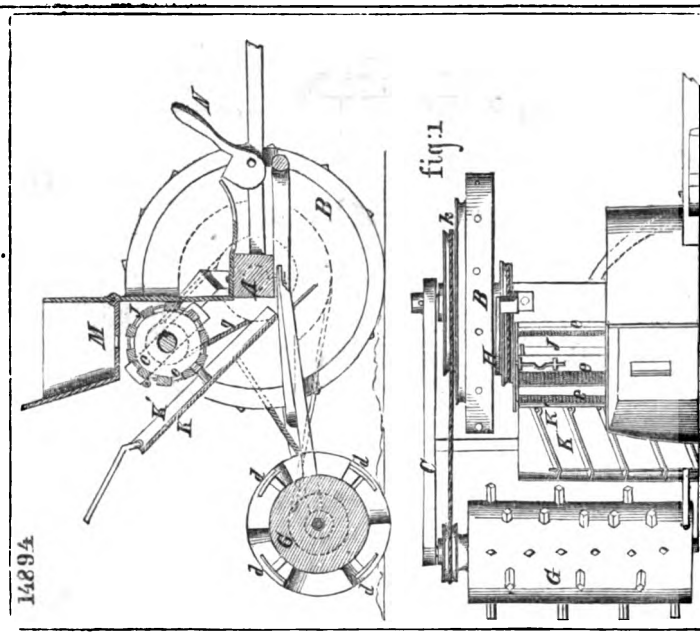

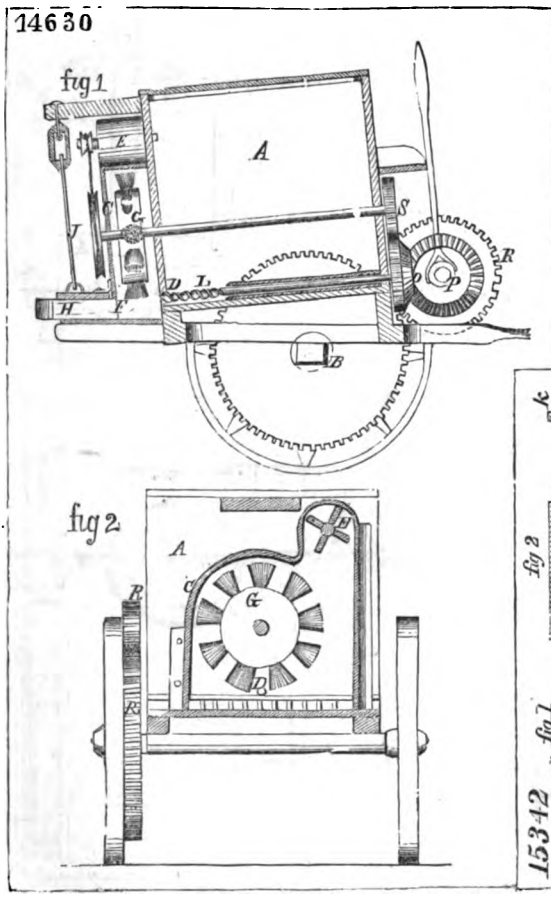

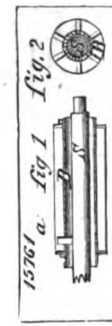

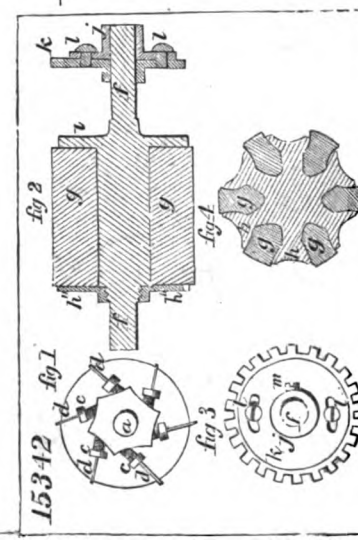

Digitized by Google

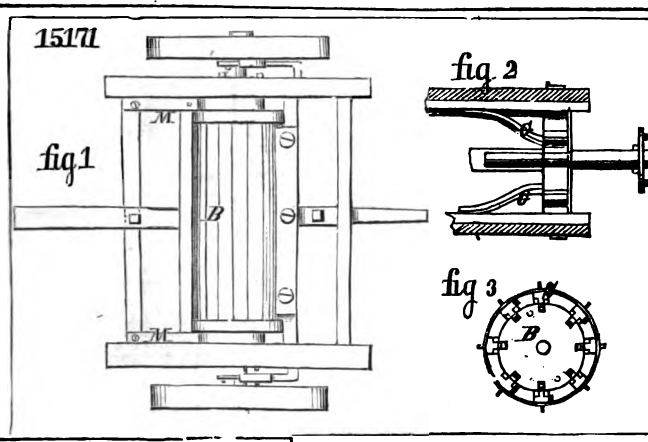

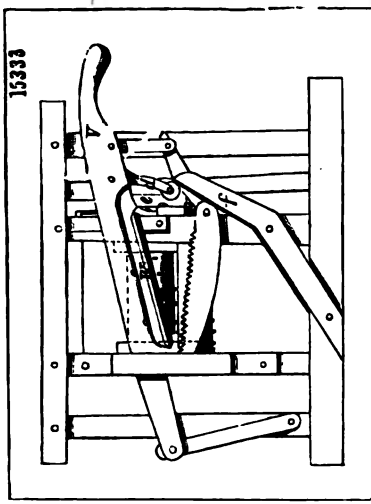

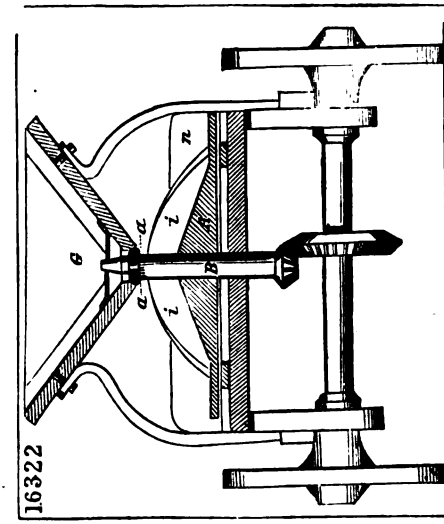

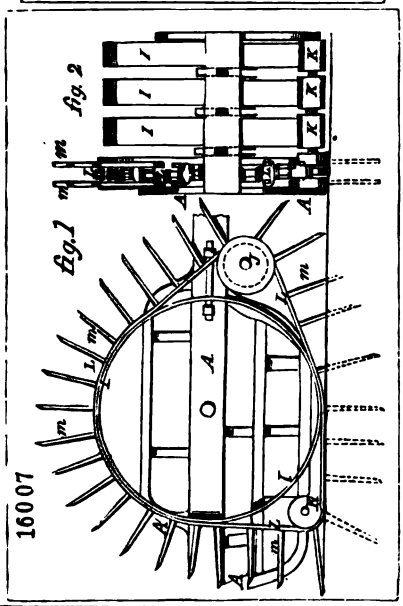

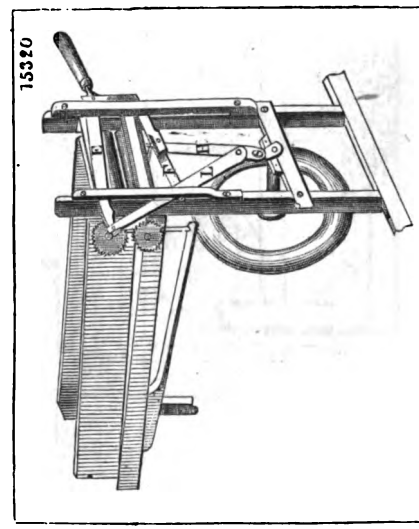

Digitized by Google

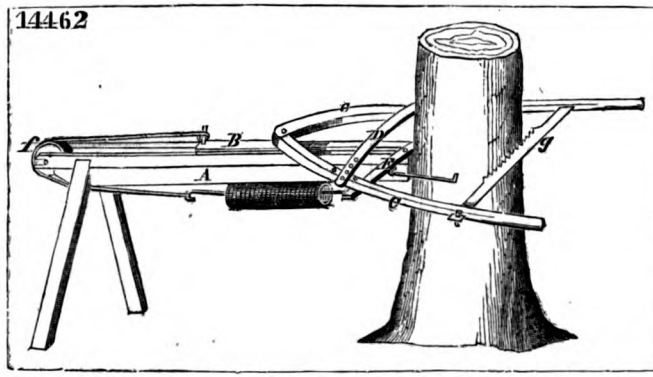

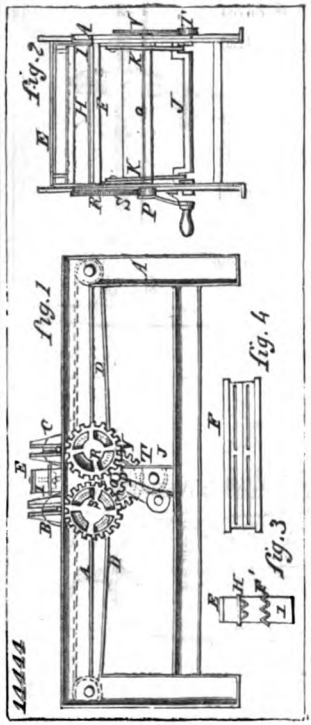

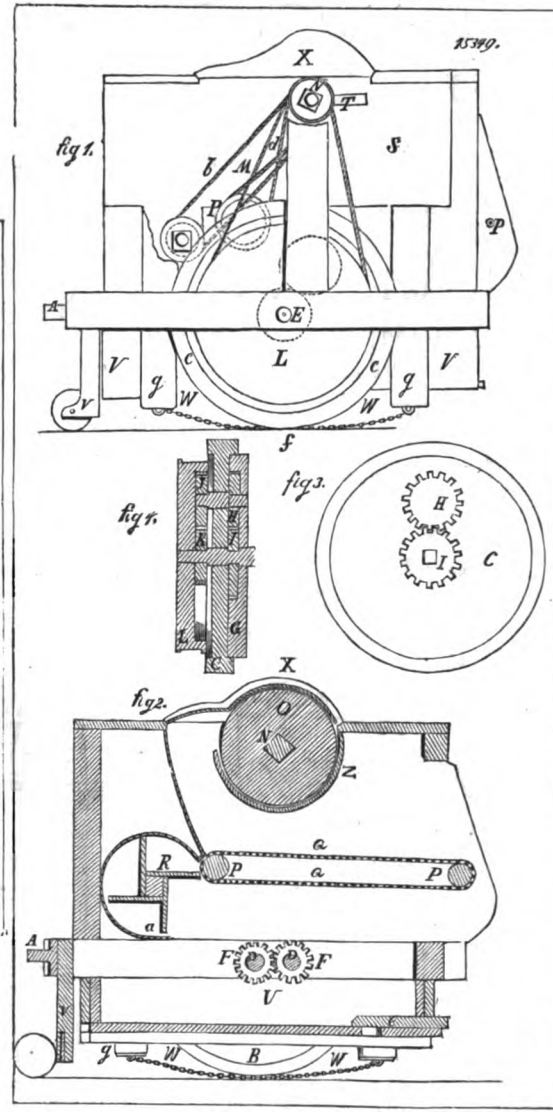

Digitized by Google

15116

fig 1

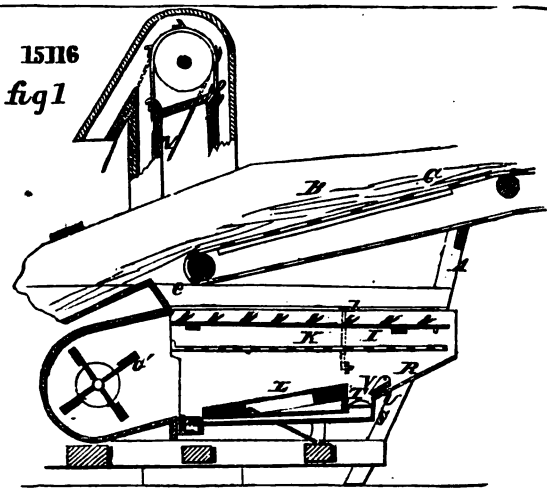

fig 2

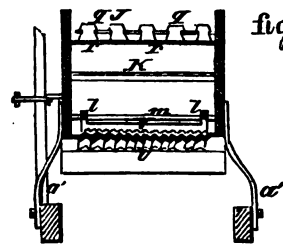

14865

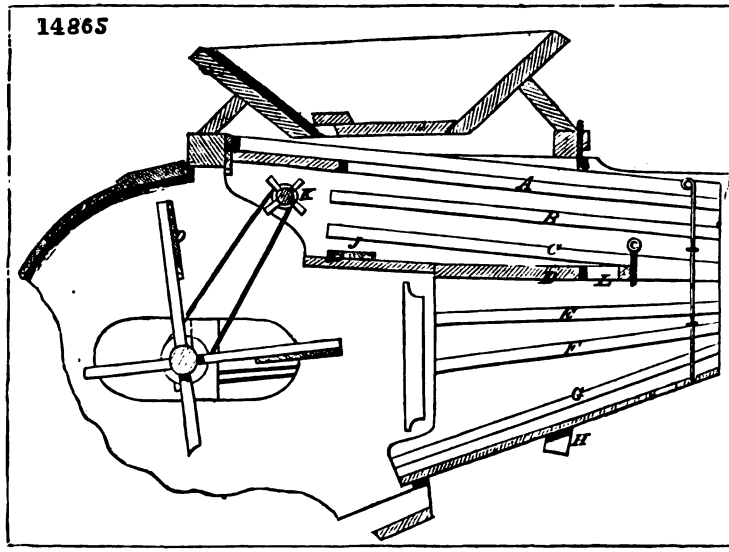

Digitized by Google

16156

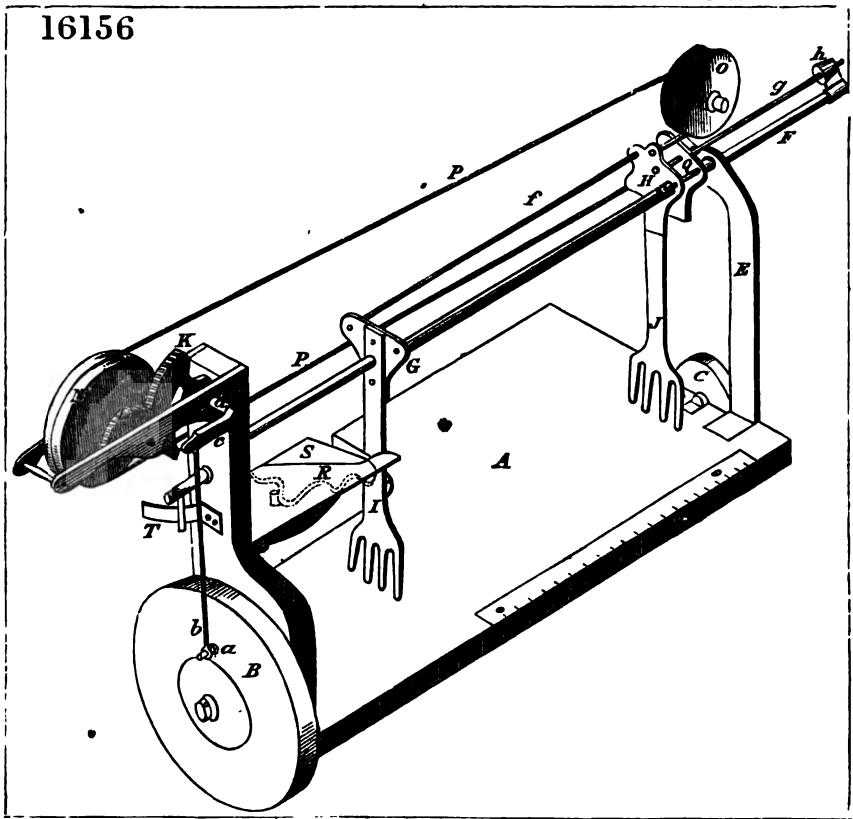

16145

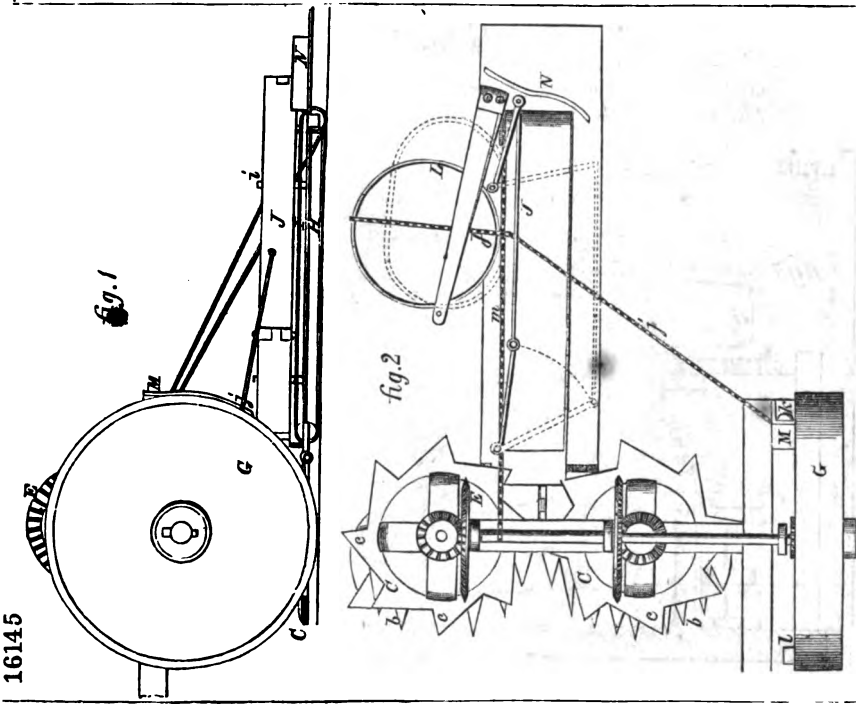

Digitized by Google

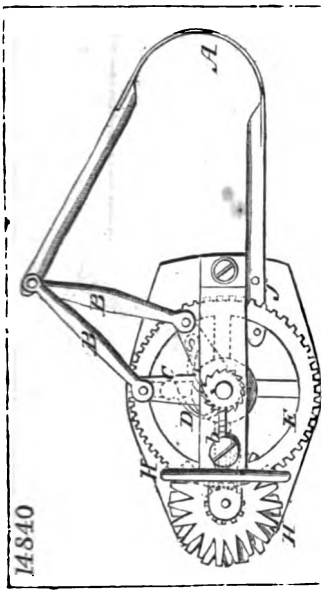

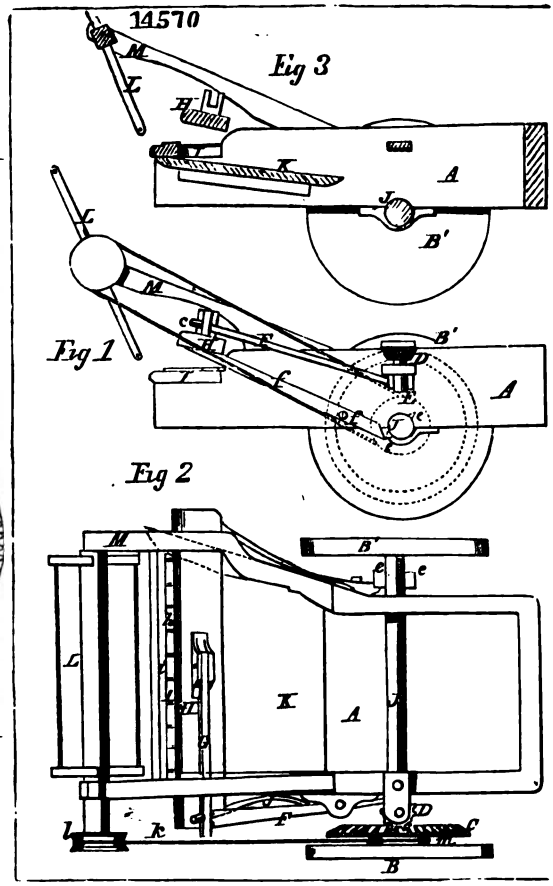

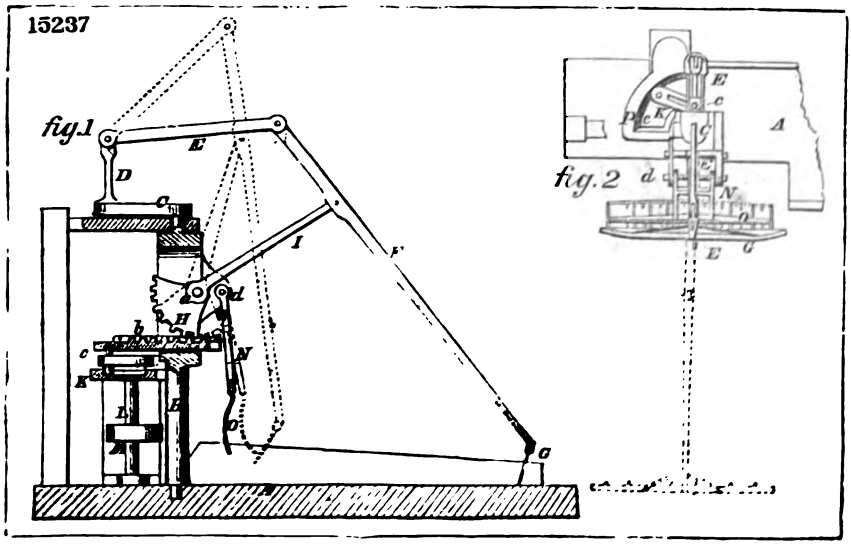

Digitized by Google

14517

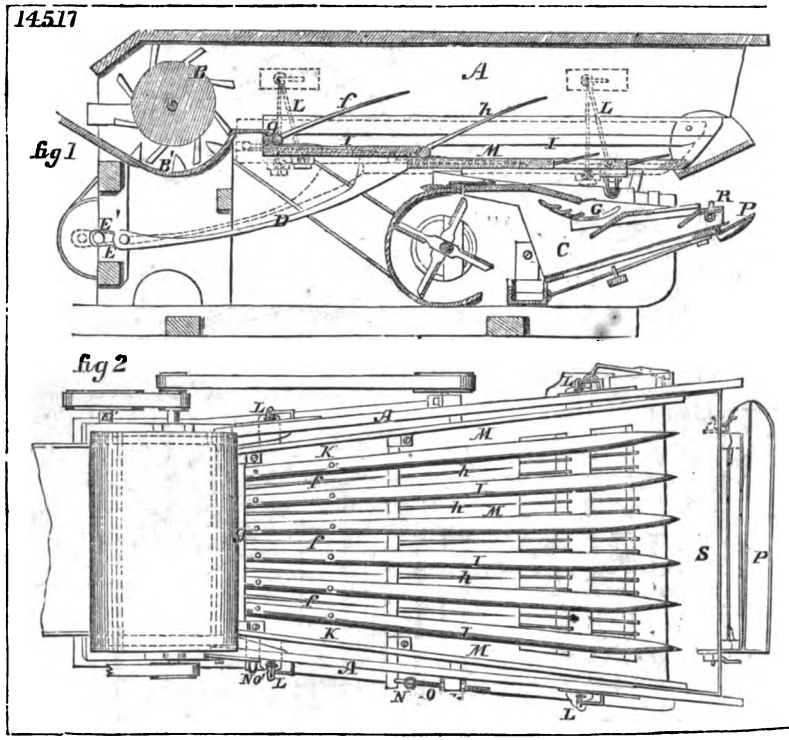

15046

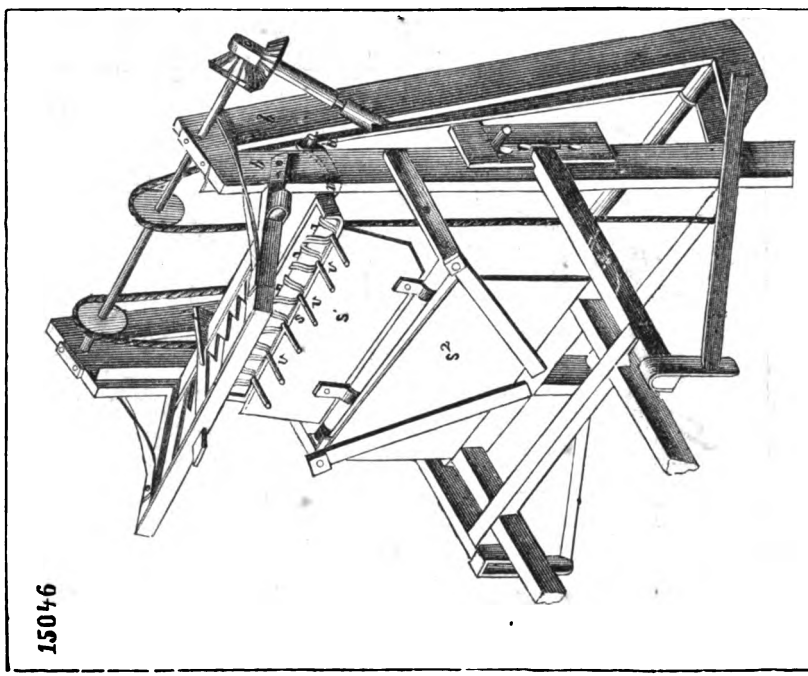

Digitized by Google

14703

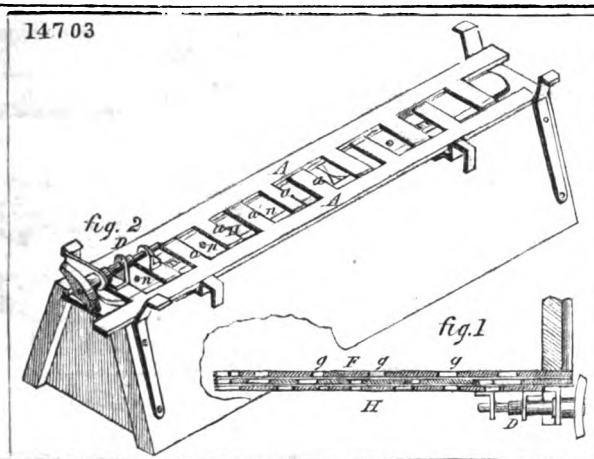

15044

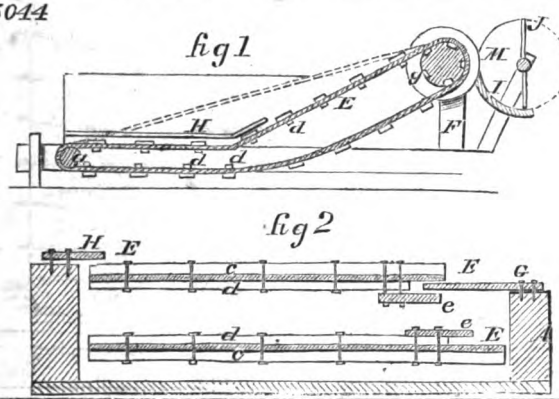

15096

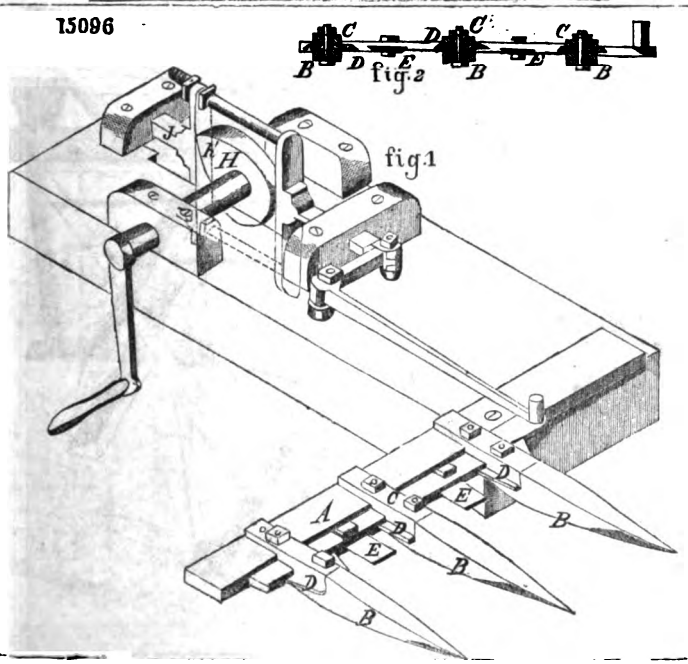

Digitized by Google

14540

fig.1

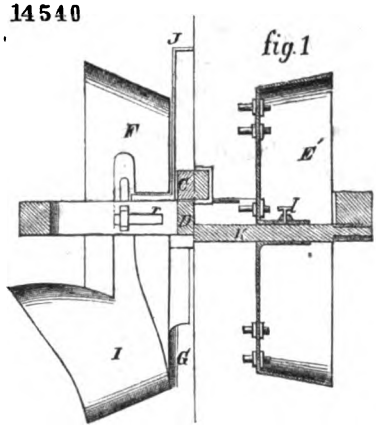

fig.3

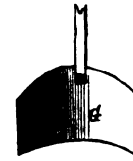

fig.2

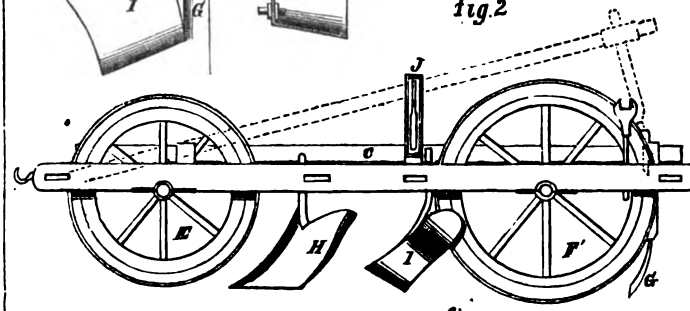

fig.4

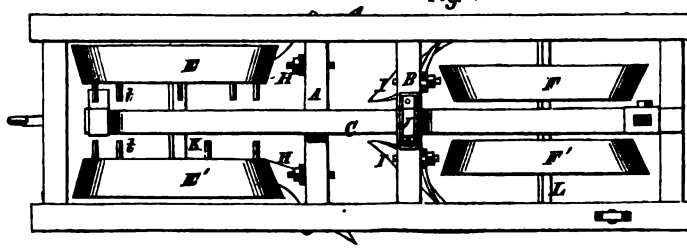

15796

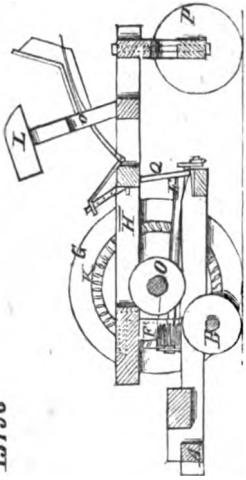

16251

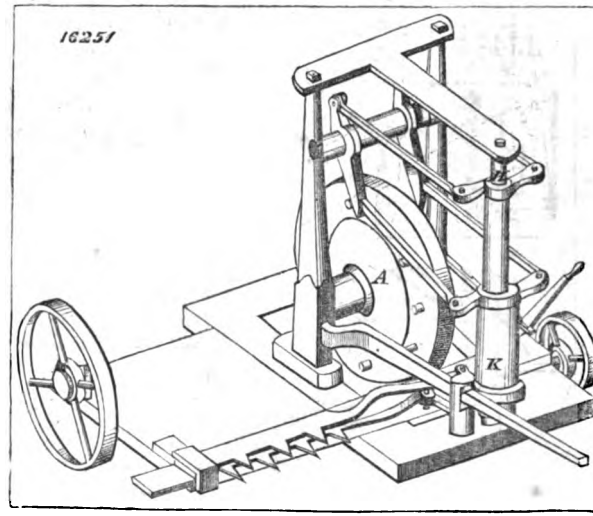

Digitized by Google

15674

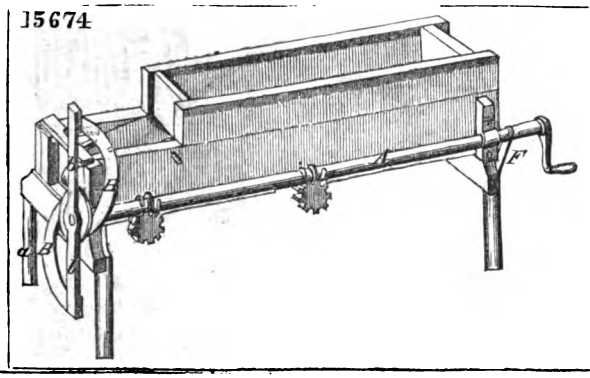

14673

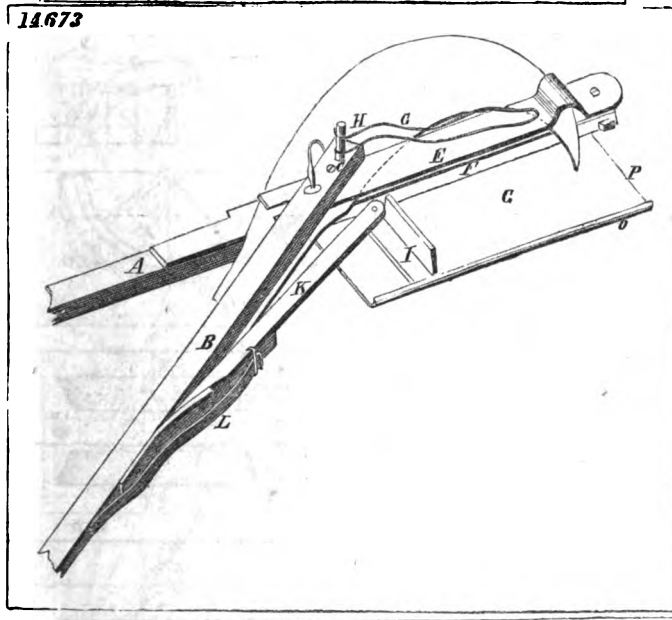

15485

fig. 1

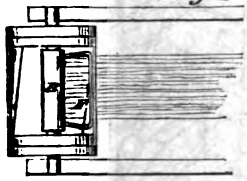

fig. 2

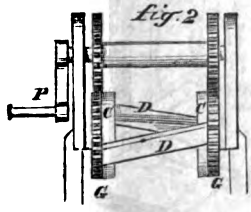

15108

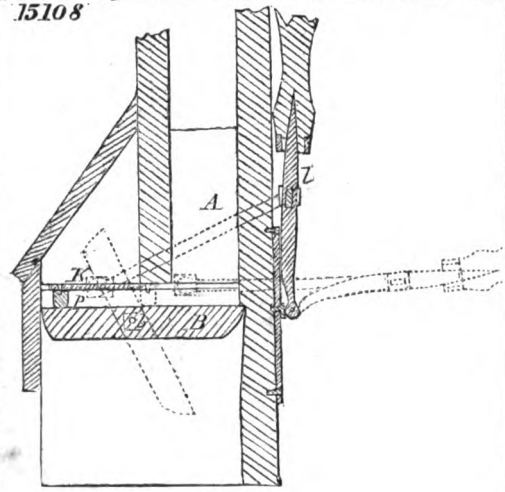

Digitized by Google

14837

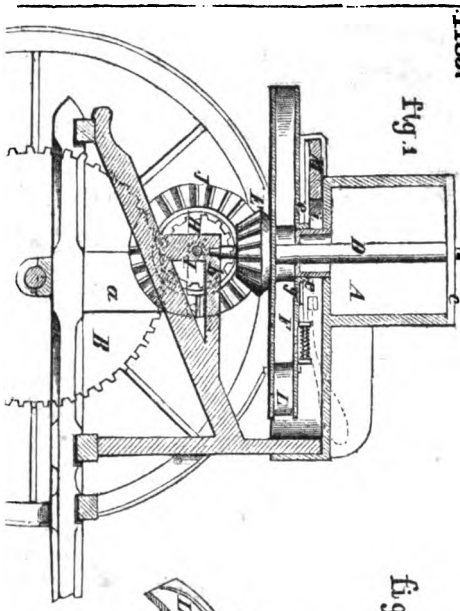

16199

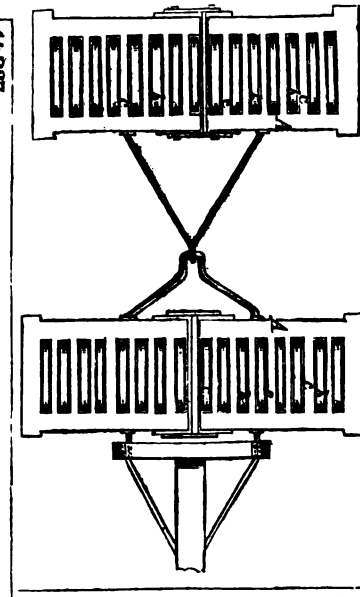

14707

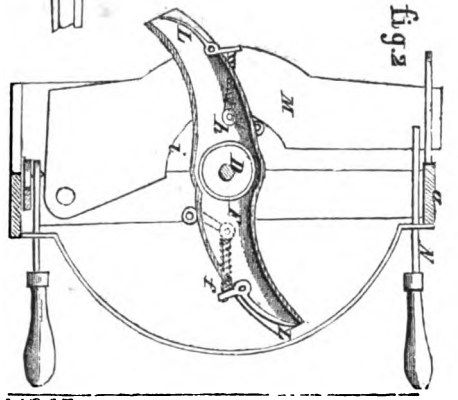

14354

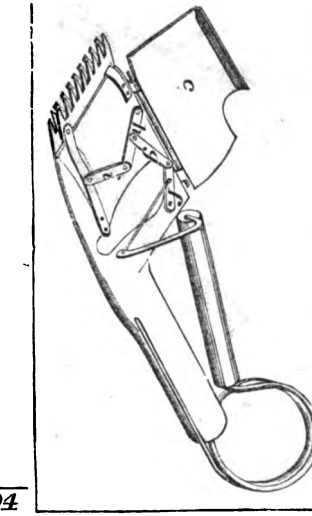

15104

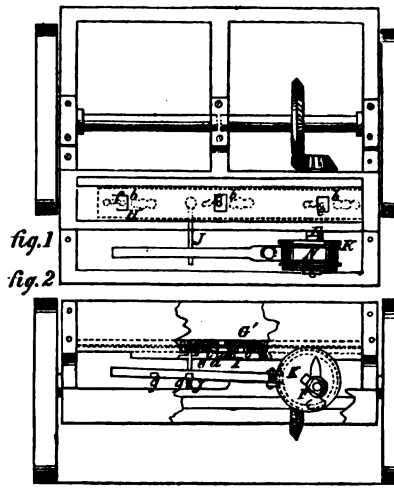

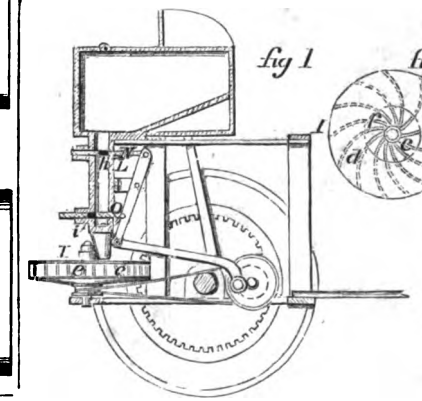

Digitized by Google

14110

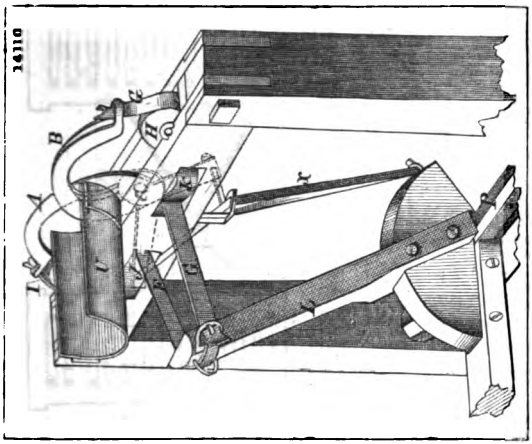

15948

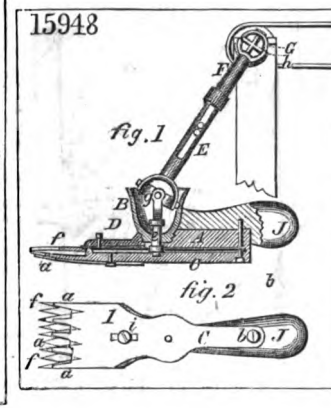

14629

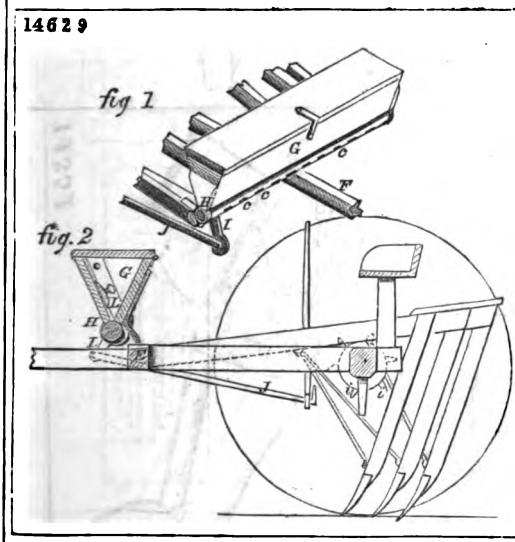

16264

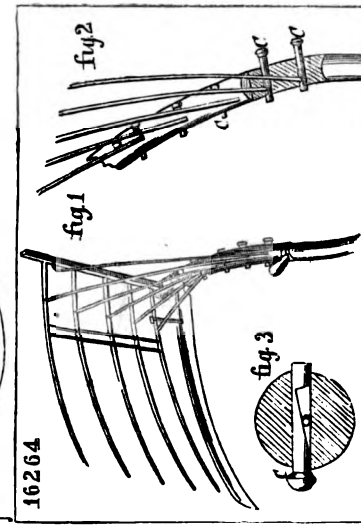

14410

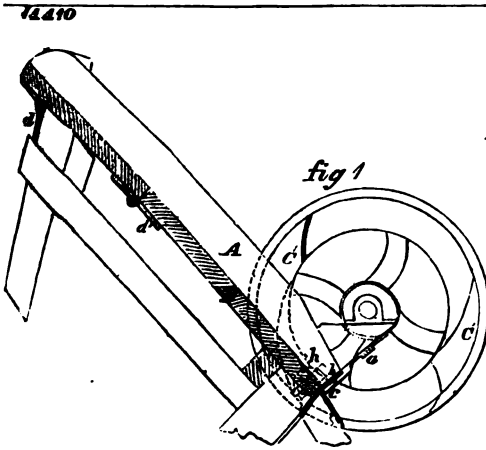

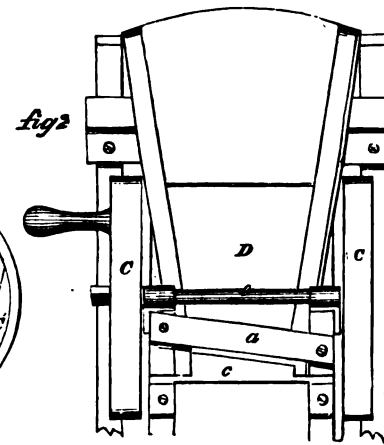

Digitized by Google

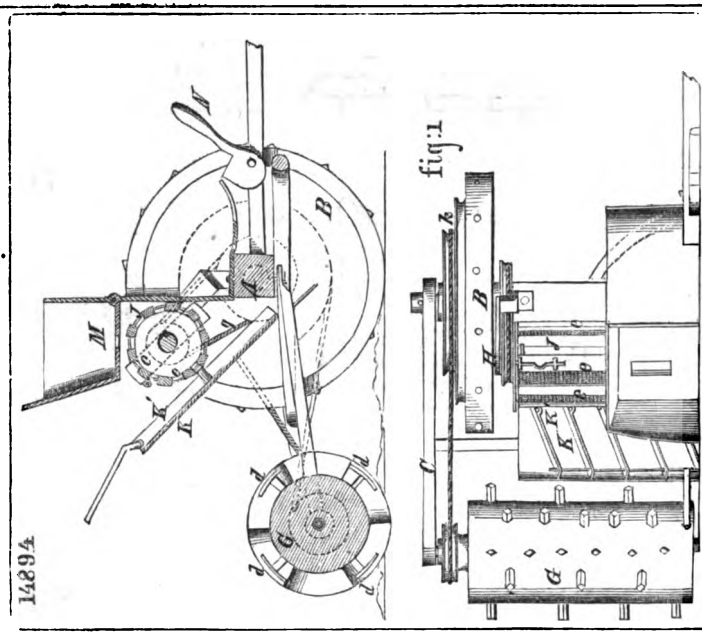

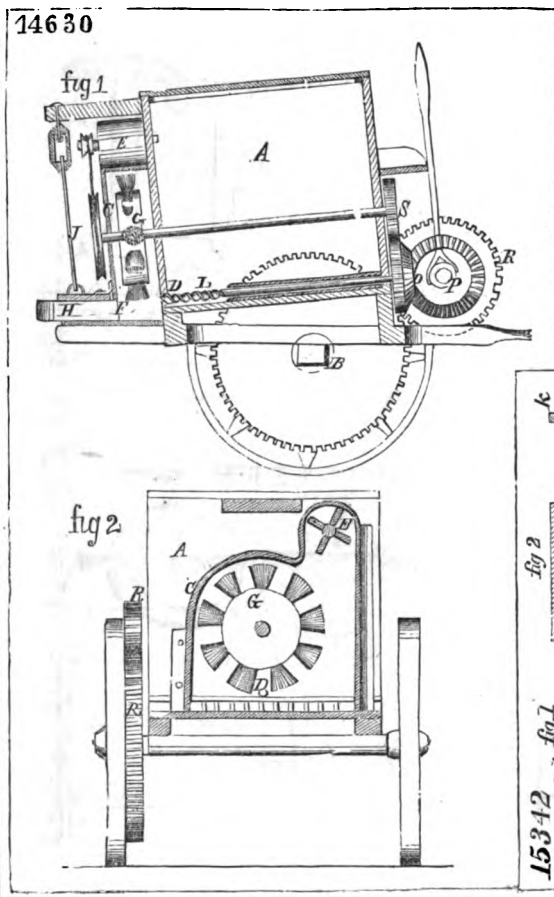

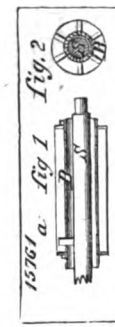

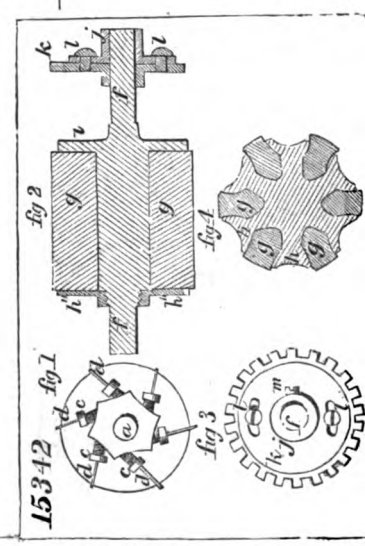

Digitized by Google

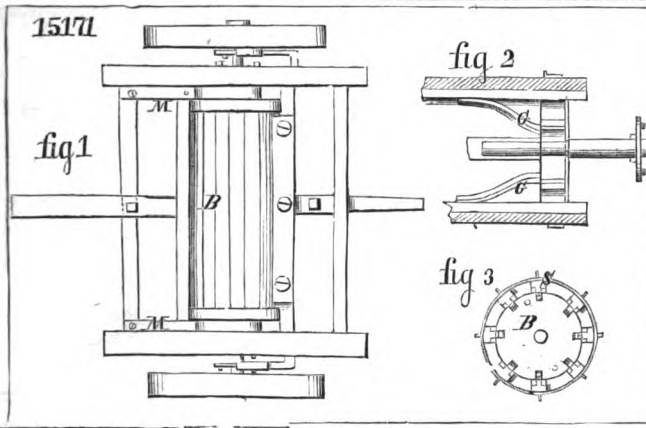

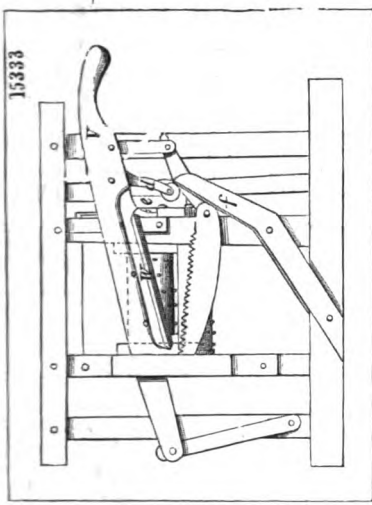

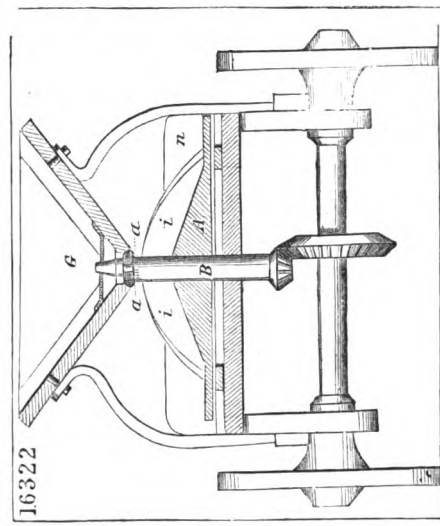

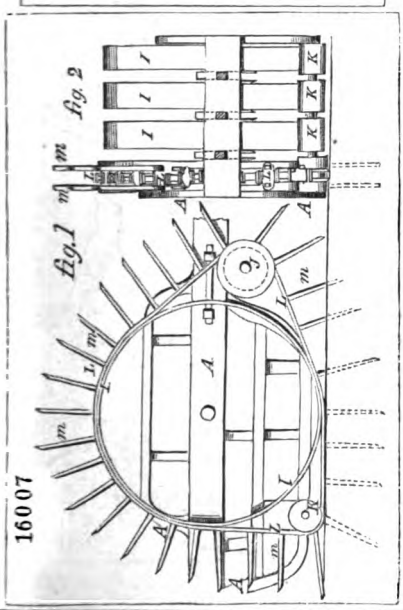

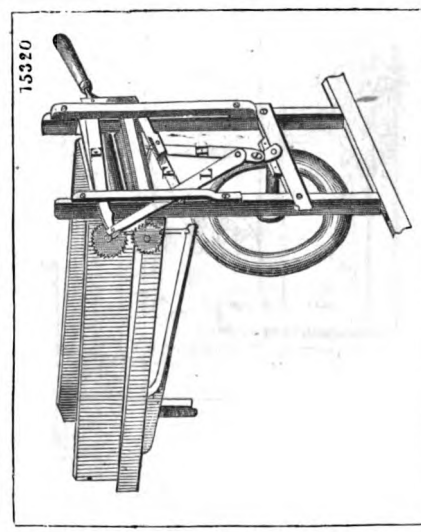

Digitized by Google

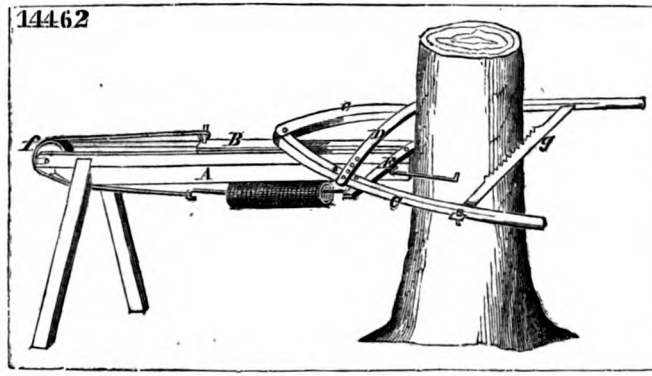

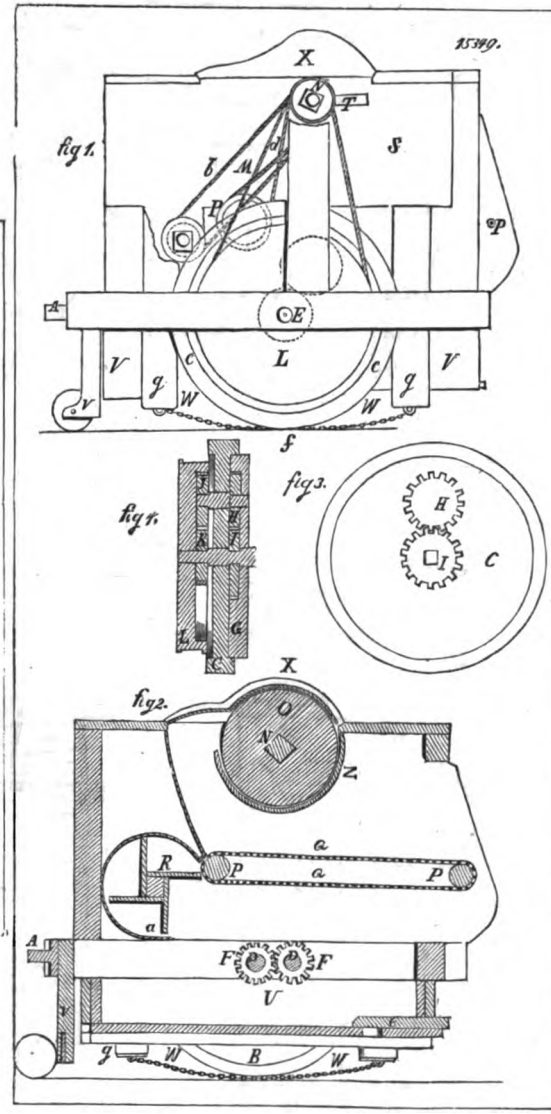

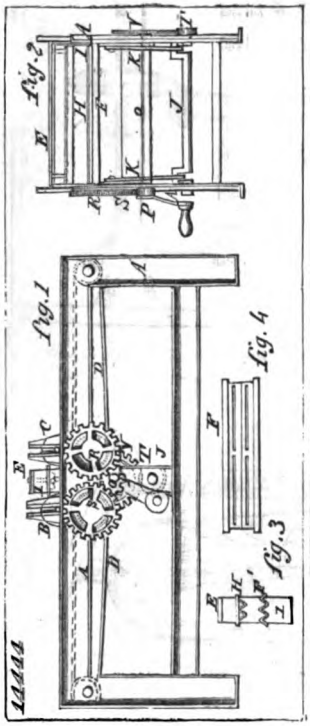

Digitized by Google

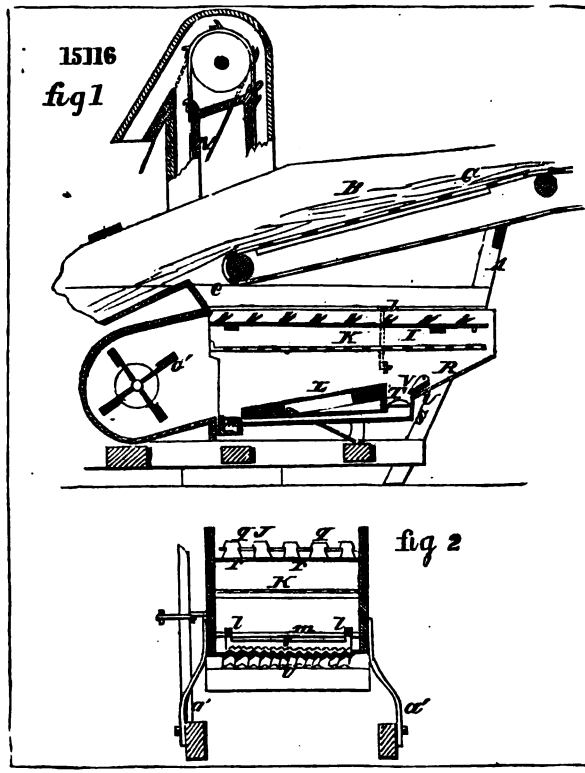

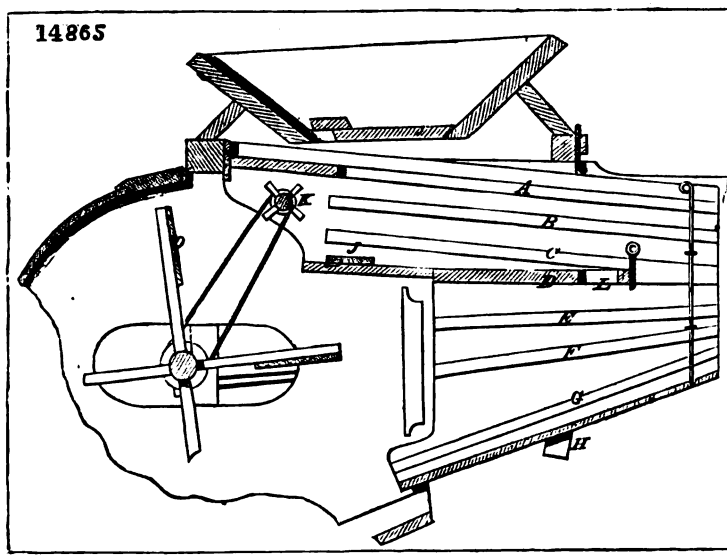

Digitized by Google

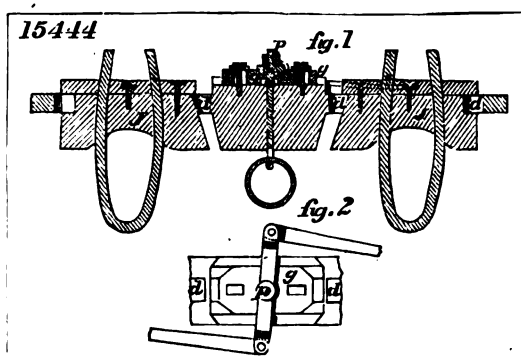

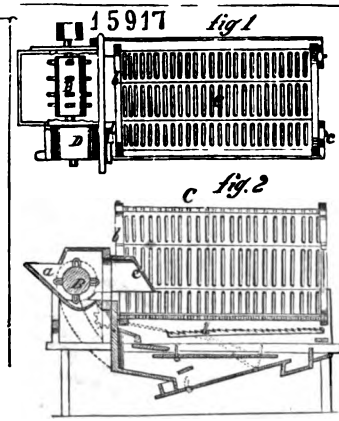

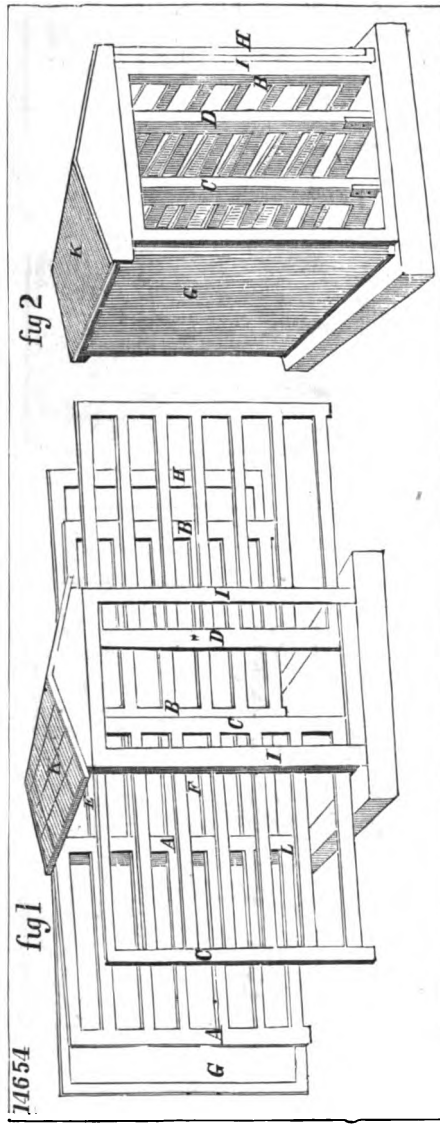

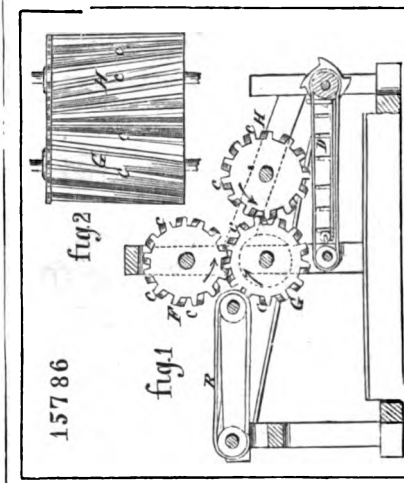

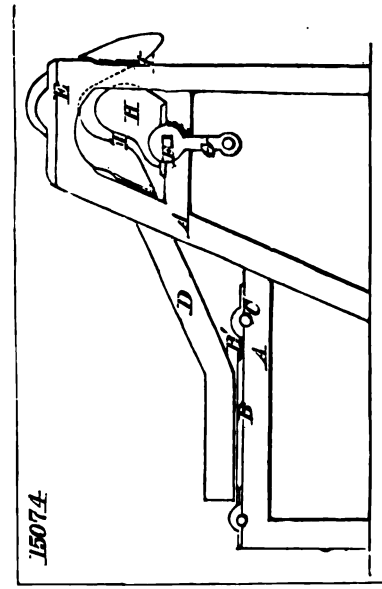

Digitized by Google

15037

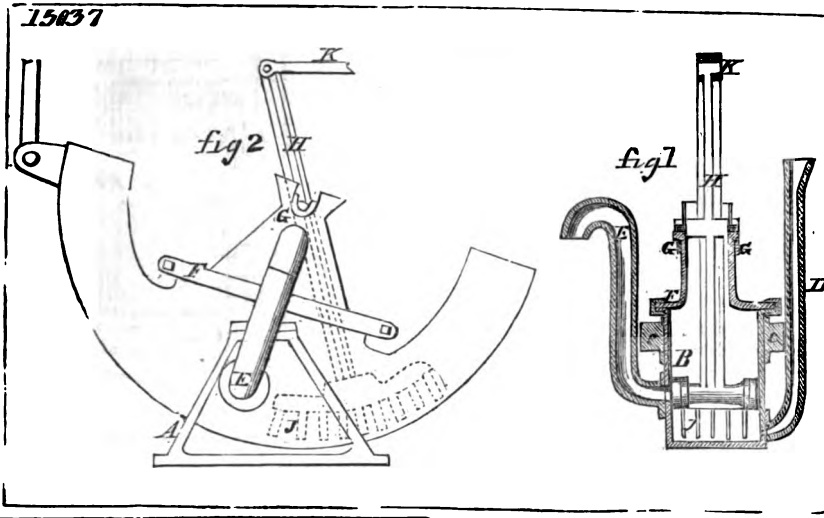

14704

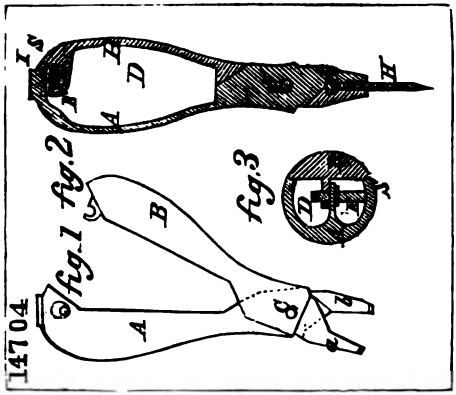

15619

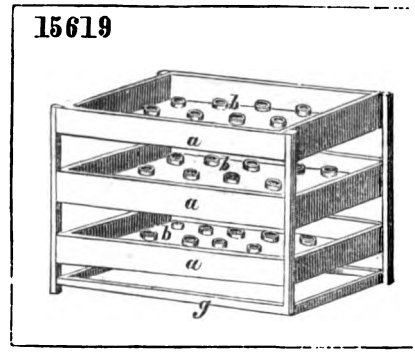

14023

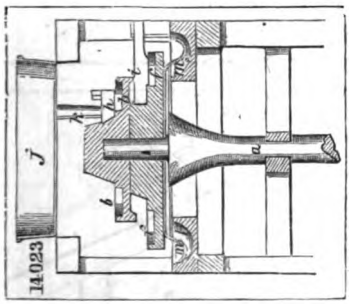

15147

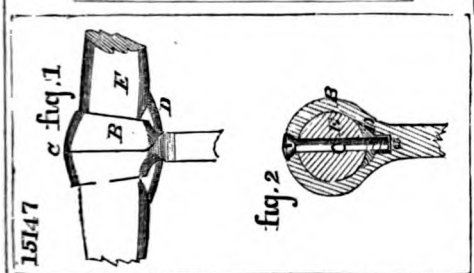

14561

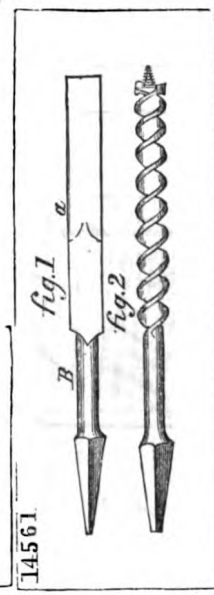

15524

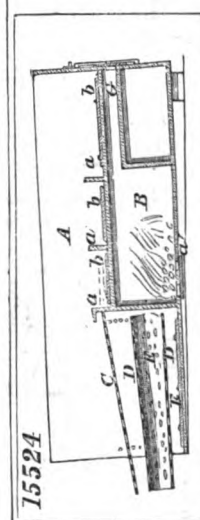

Digitized by Google

14695

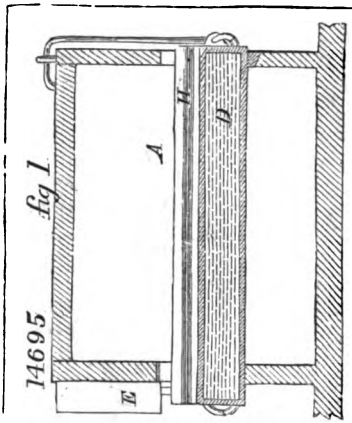

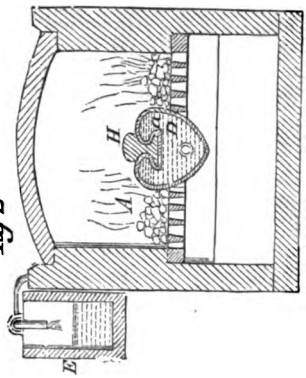

15880

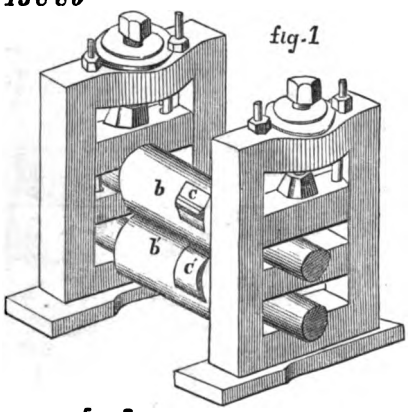

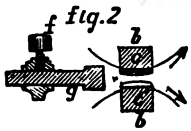

15562

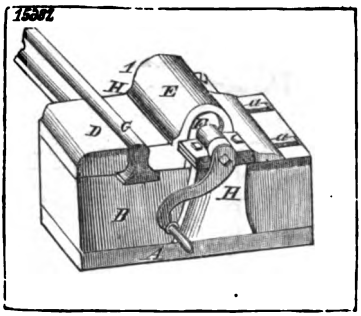

15656

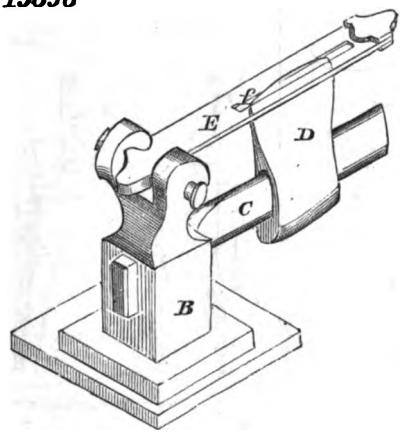

14876

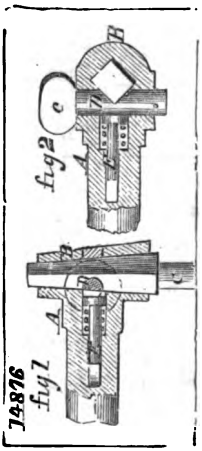

Digitized by Google

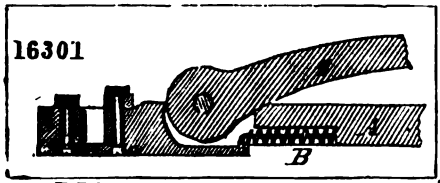

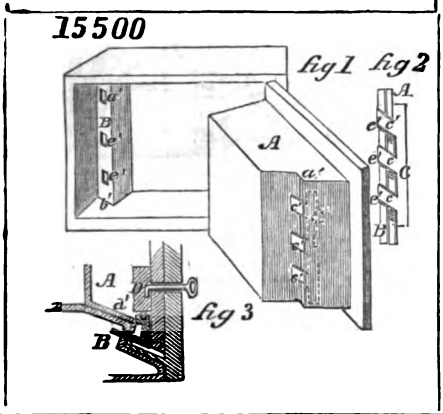

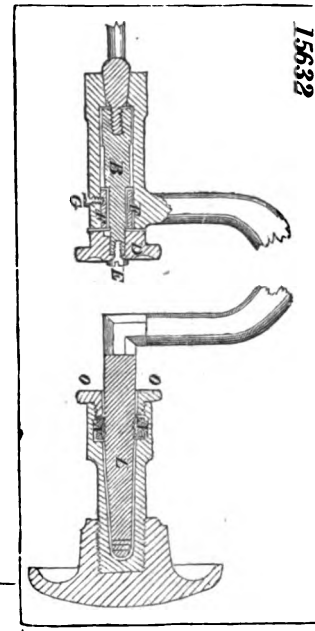

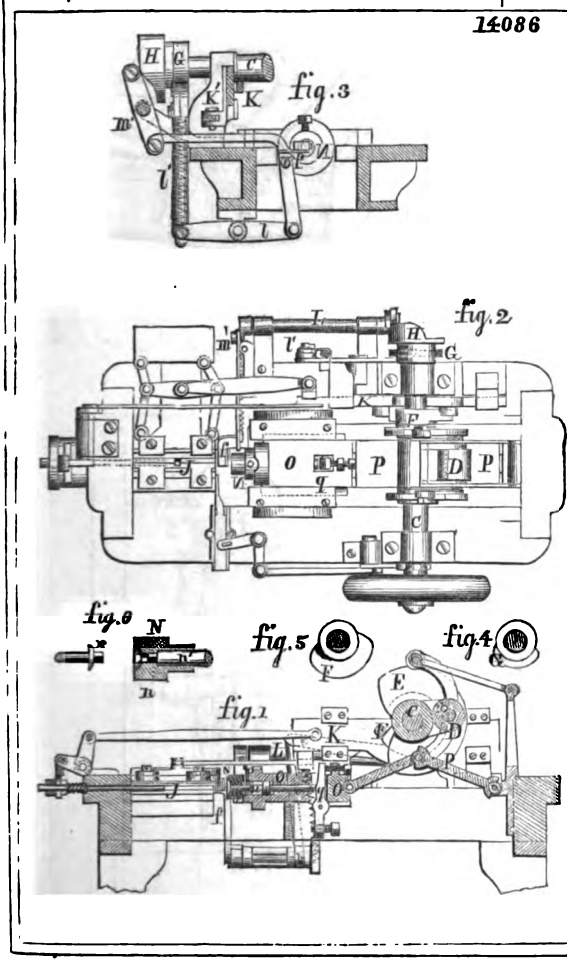

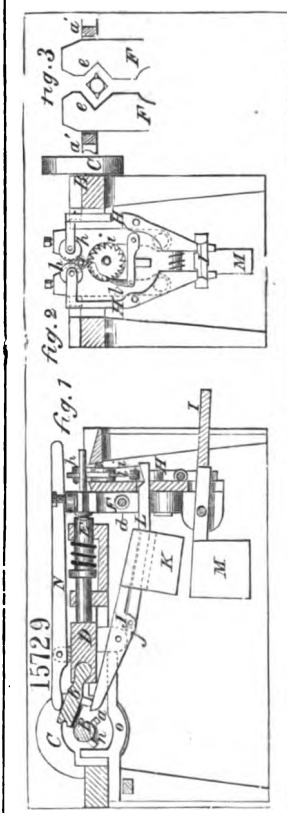

Digitized by Google

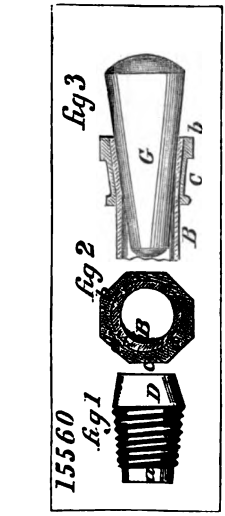

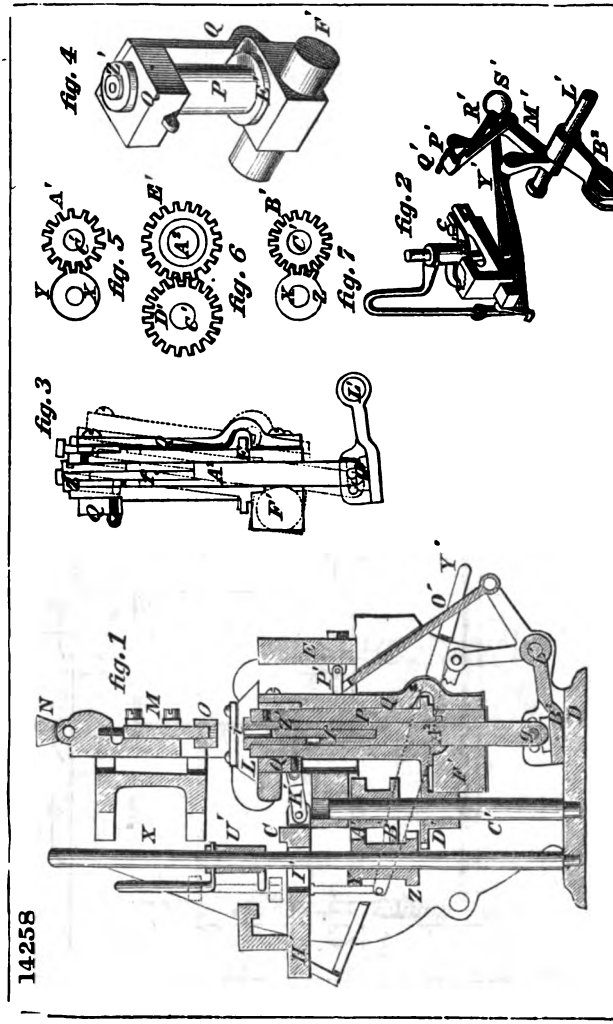

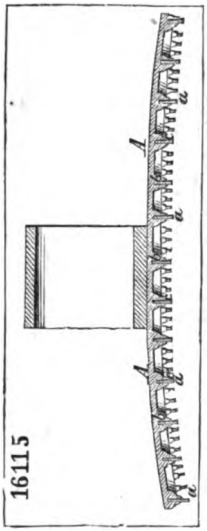

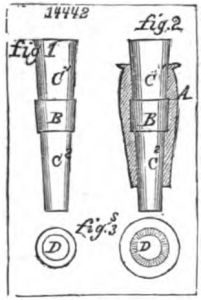

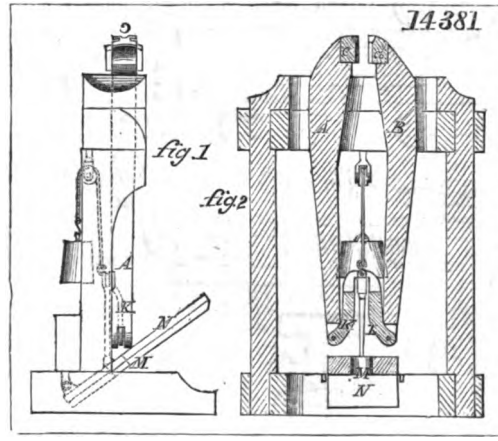

Digitized by Google

14633

fig1

fig.2

16228

fig.1

fig.2

fig.3

15278

fig 1

fig 2

Digitized by Google

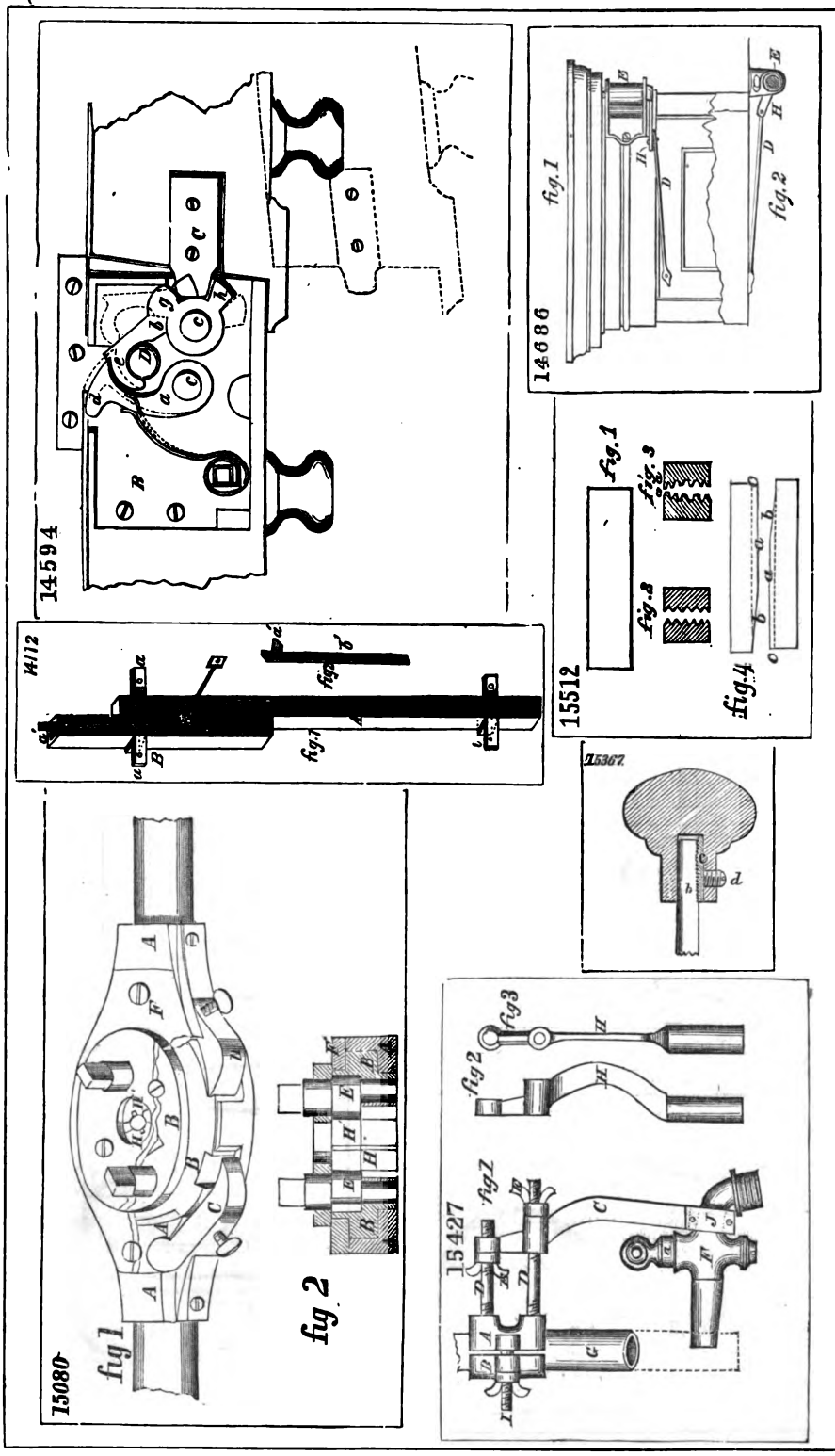

Digitized by Google

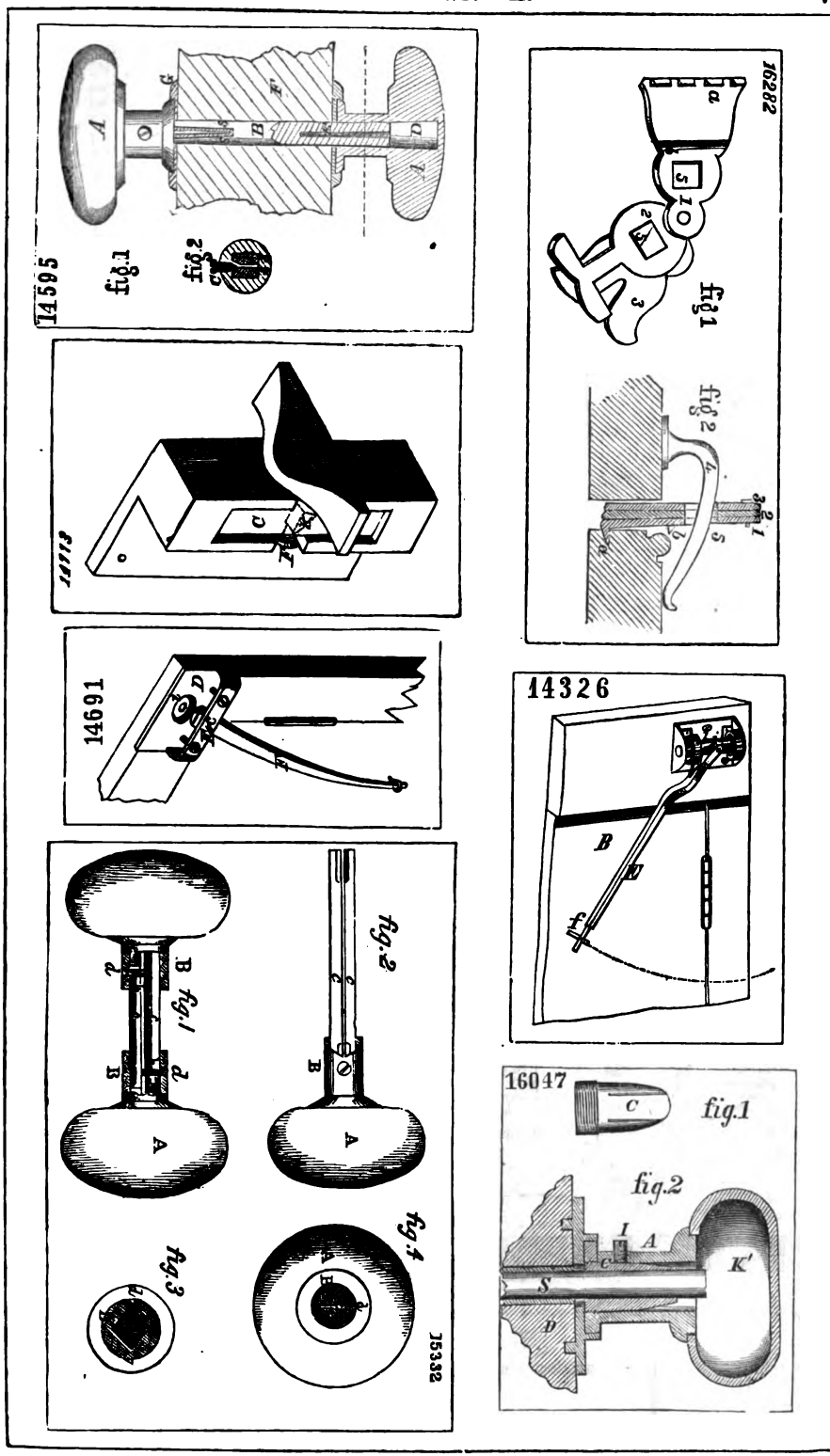
14595
fig.1
fig.2
16282
fig.1
fig.2
14691
14326
16047
fig.1
fig.2
fig.1
fig.2
fig.3
fig.4
15332

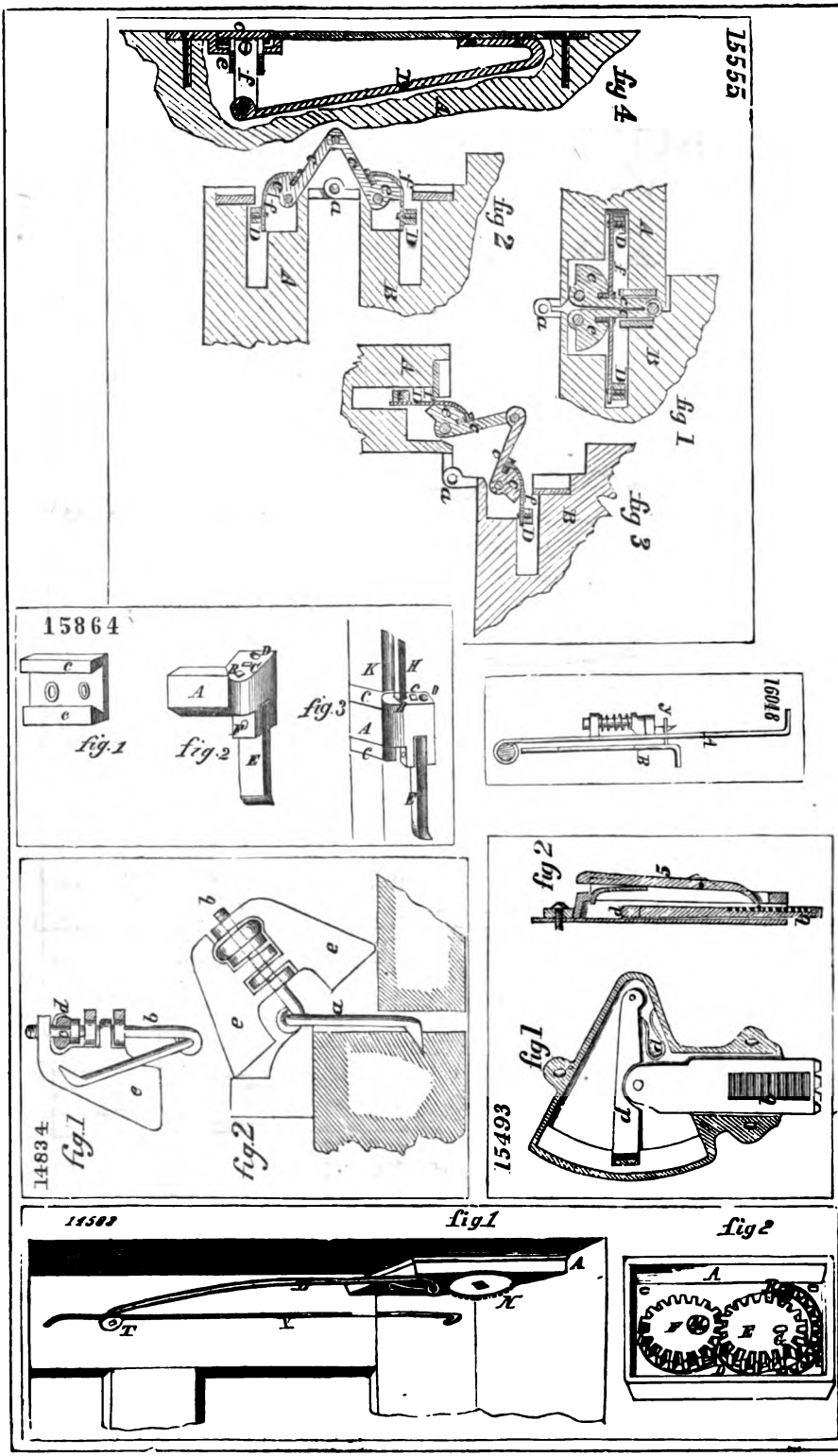

Digitized by Google

15912

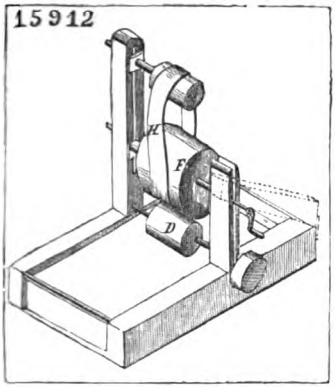

16064

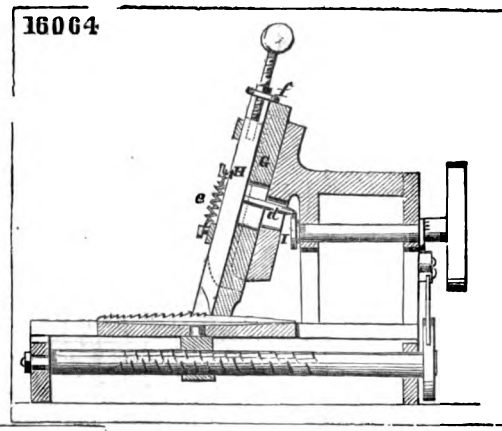

14189

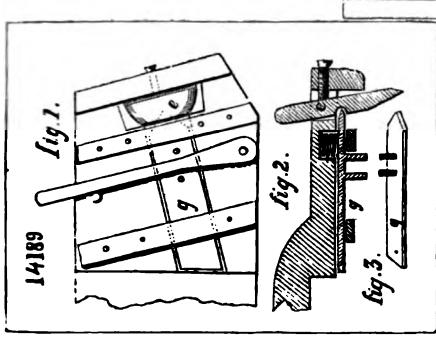

15525

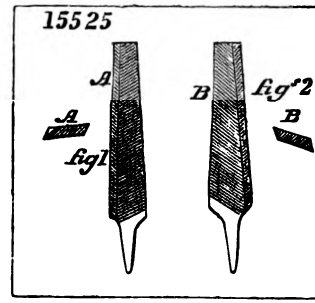

14881

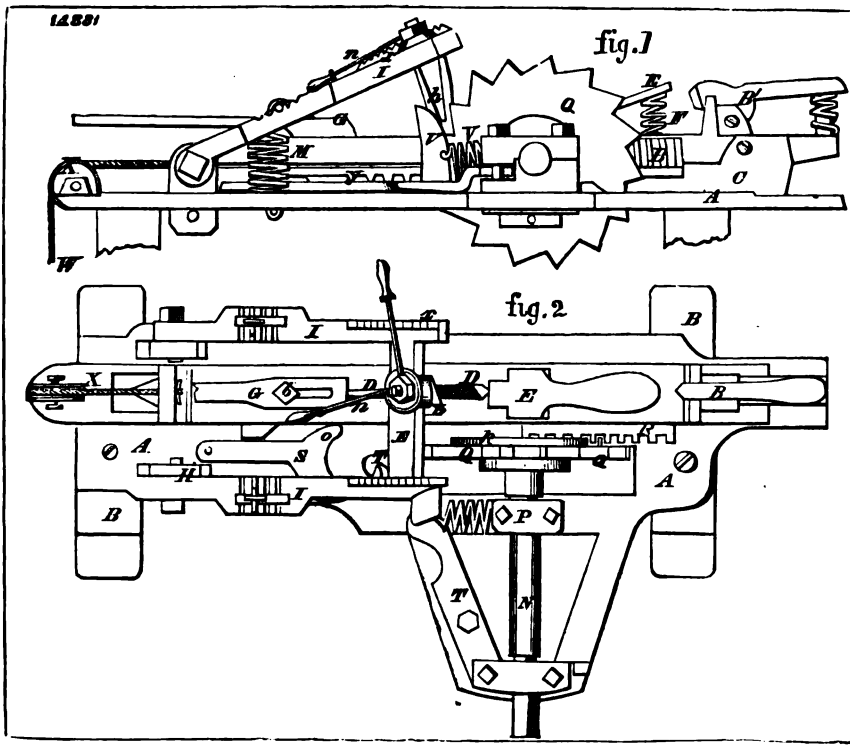

Digitized by Google

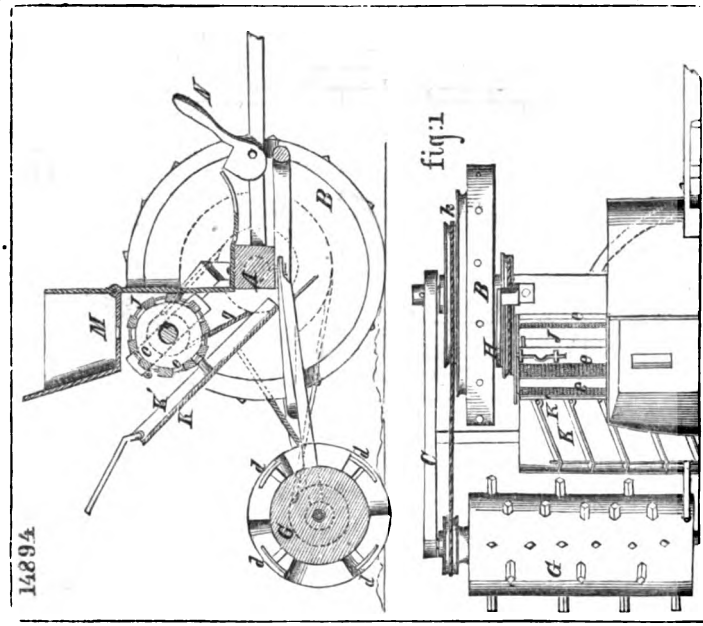

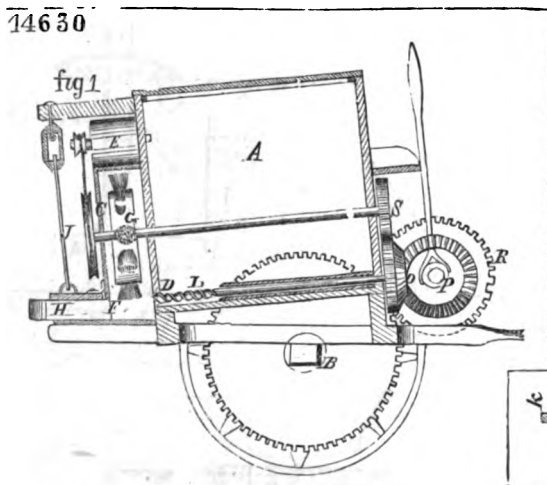

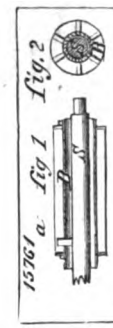

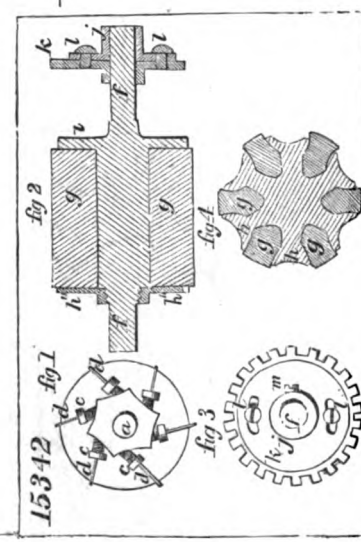

Digitized by Google

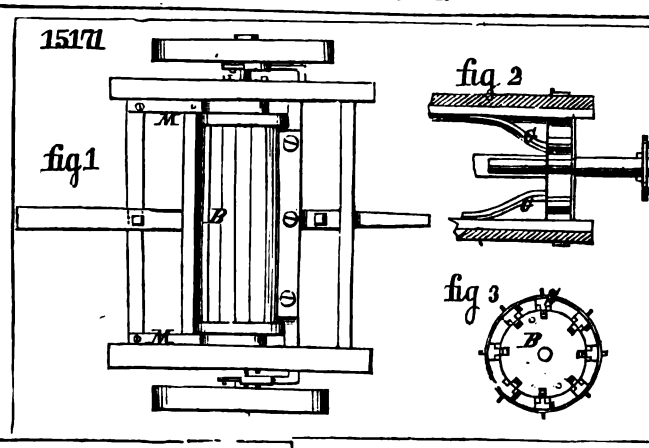

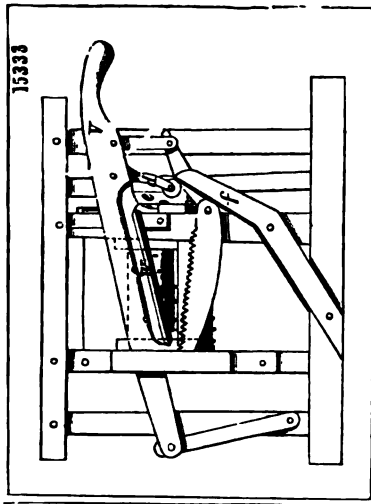

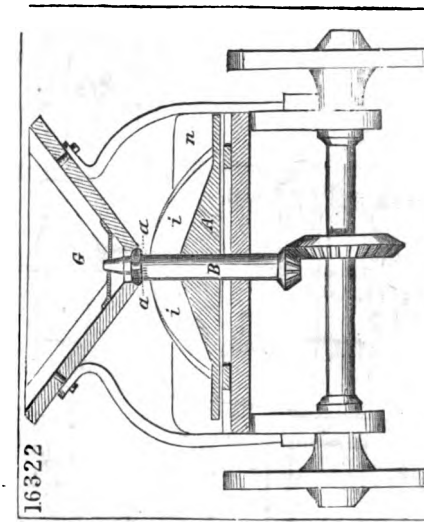

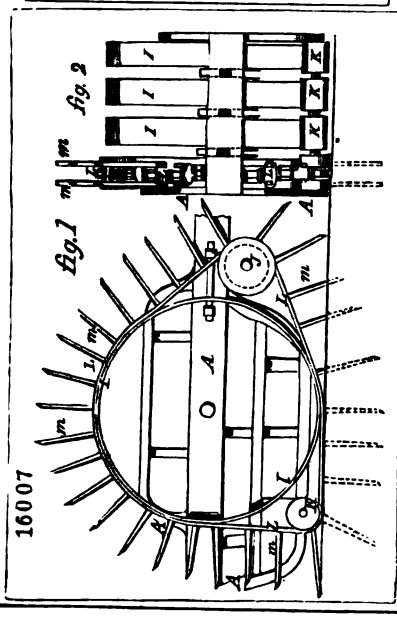

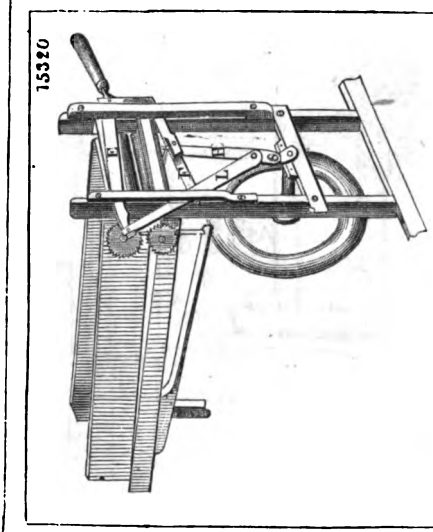

Digitized by Google

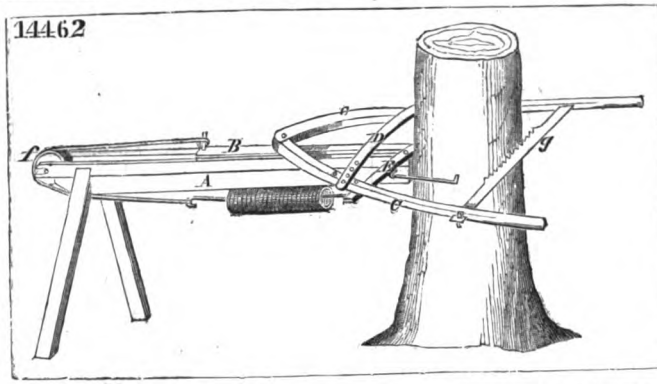

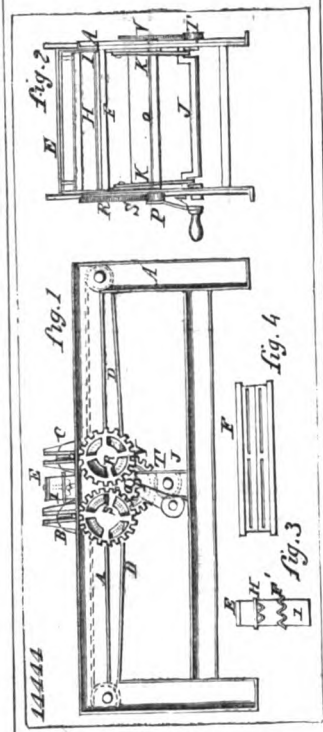

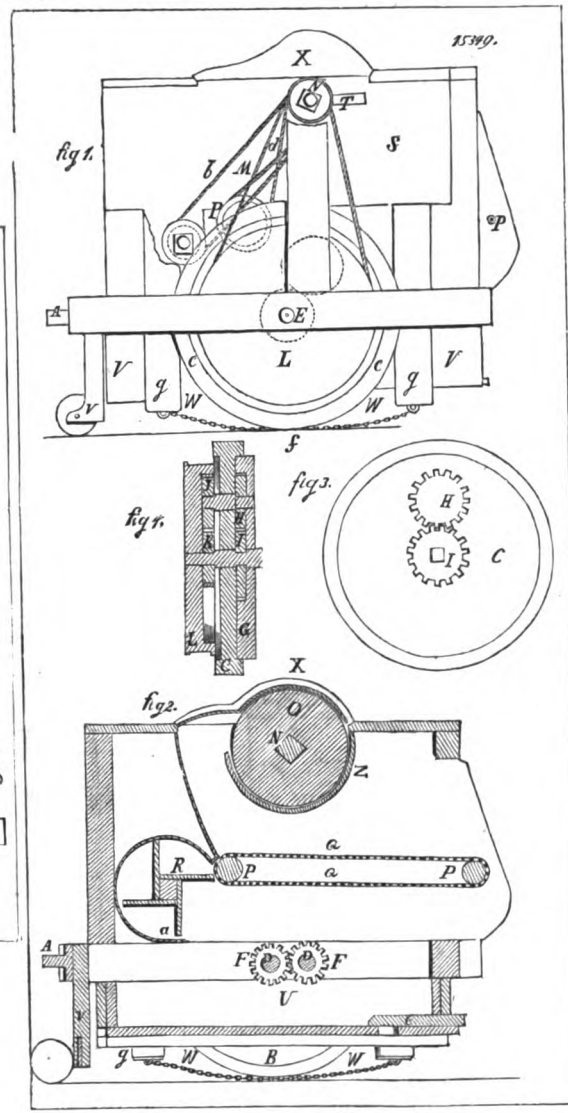

Digitized by Google

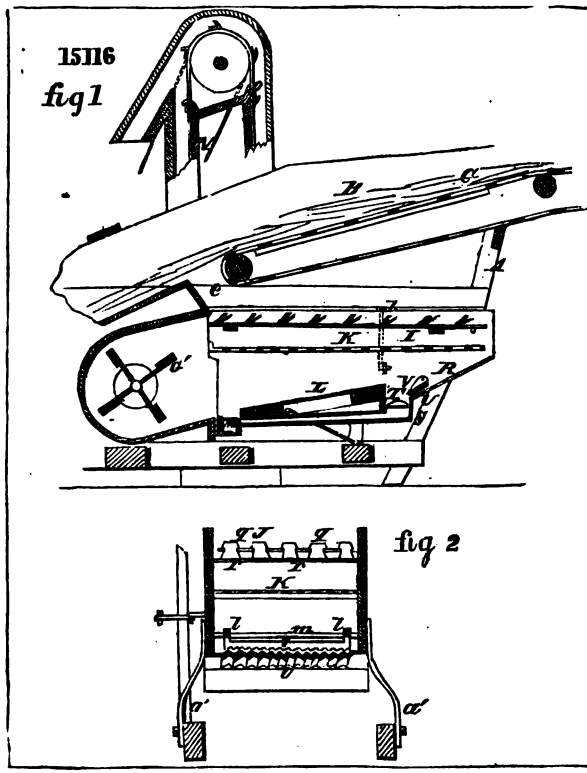

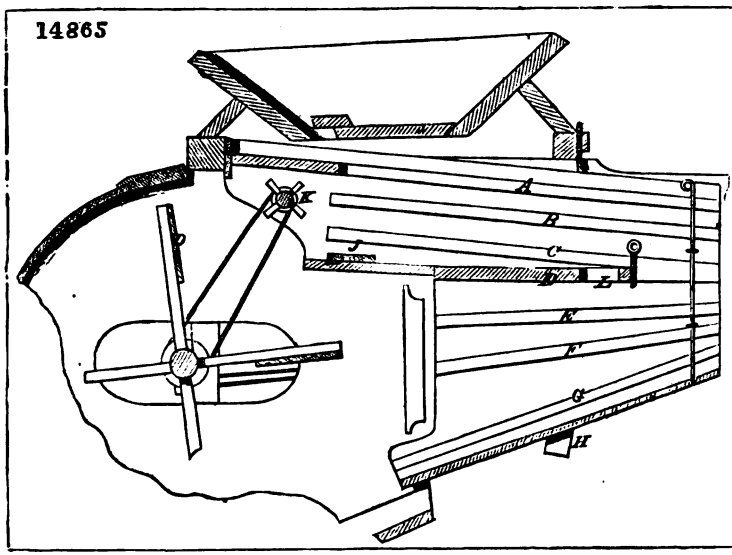

Digitized by Google

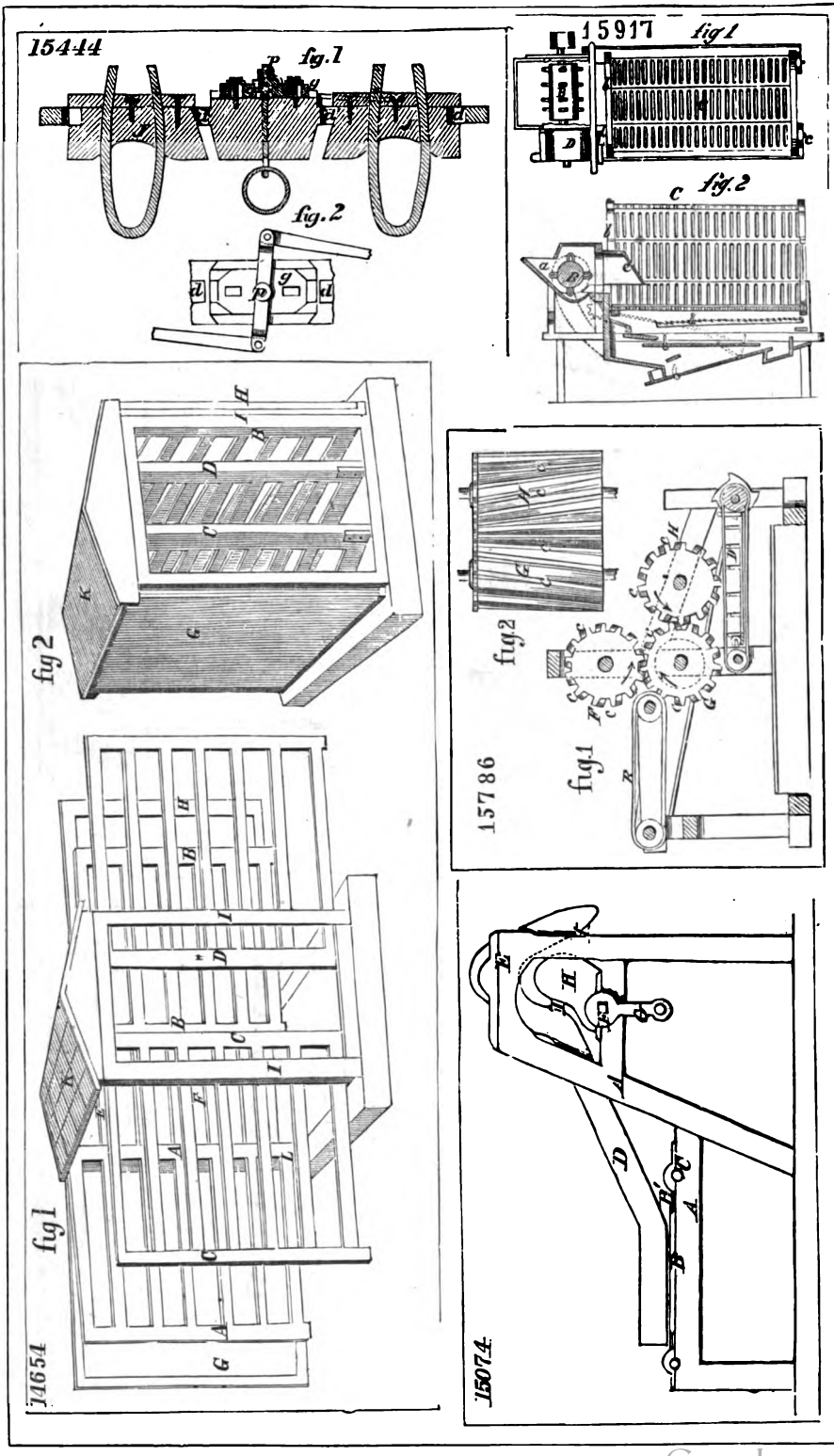

Digitized by Google

15637

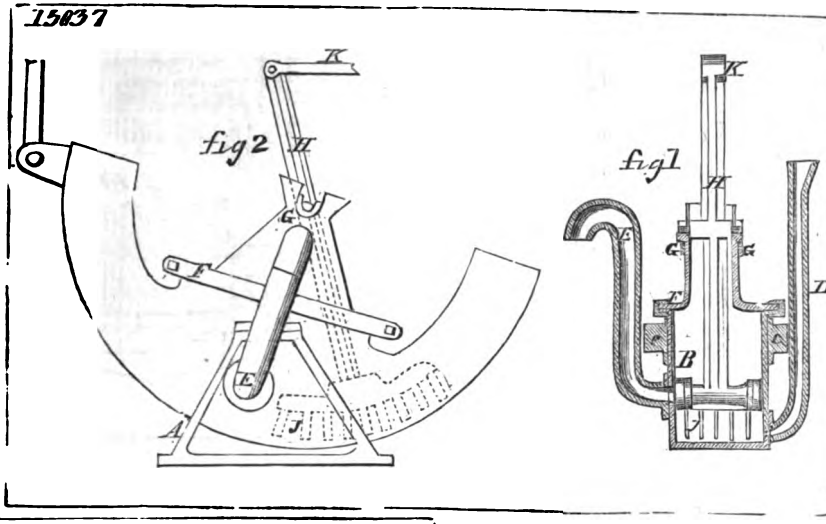

14704

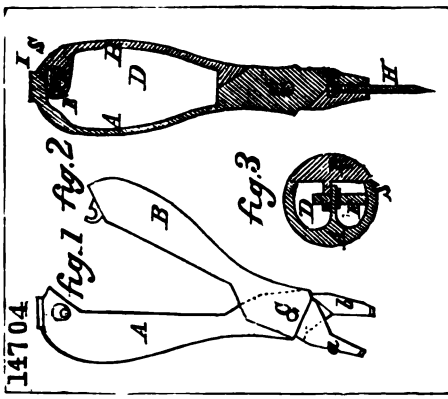

15619

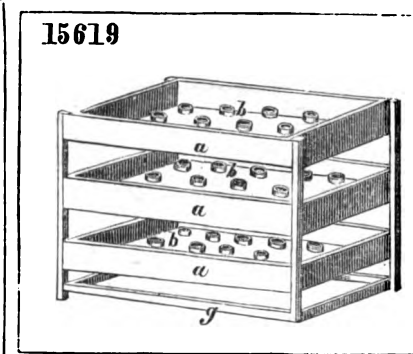

14023

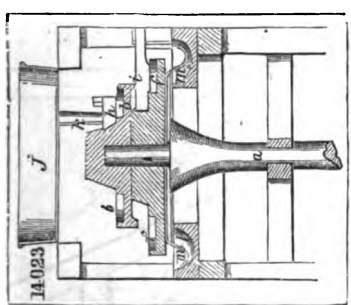

15147

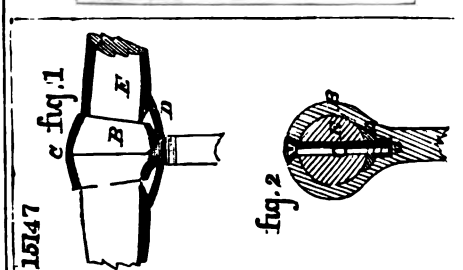

14561

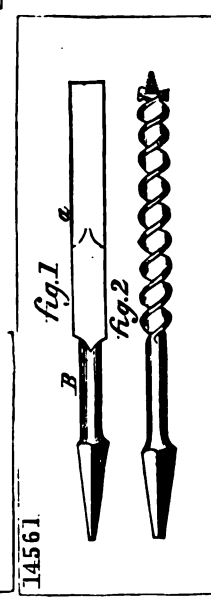

15524

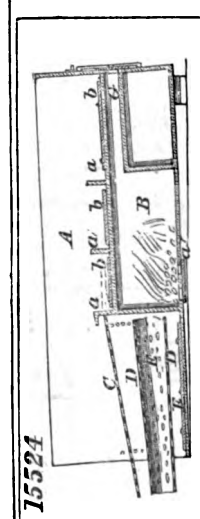

Digitized by Google

14695

fig 1

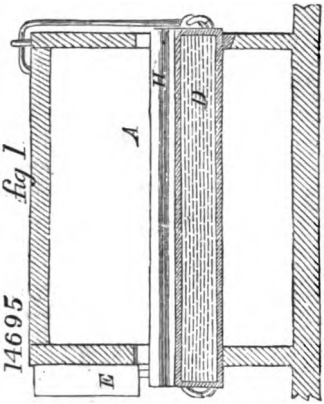

fig 2

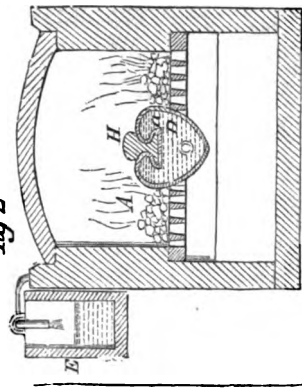

15880

fig.1

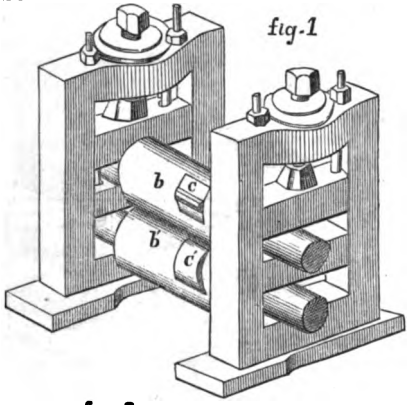

fig.2

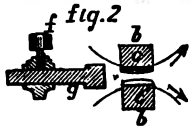

15561

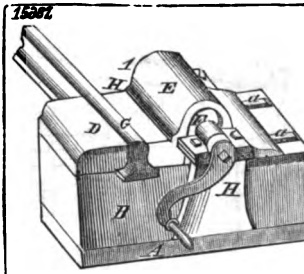

15656

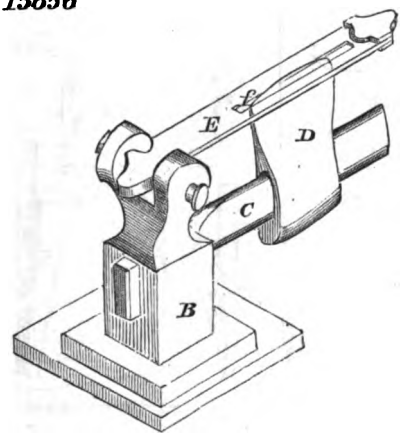

14876

fig 1

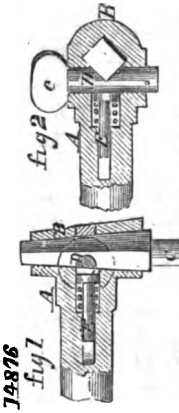

fig 2

Digitized by Google

16301

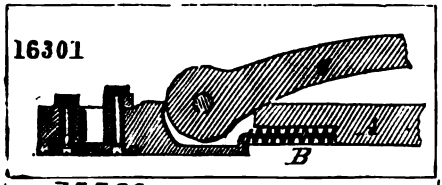

15500

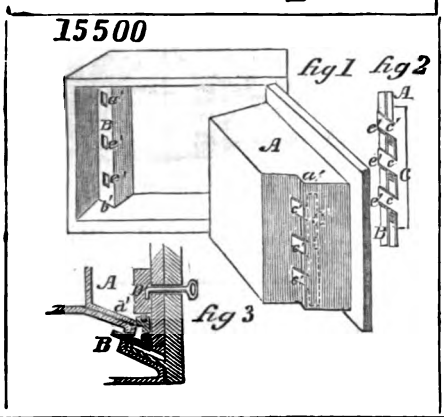

15632

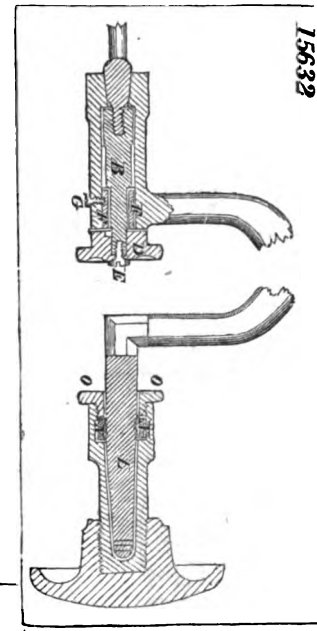

14086

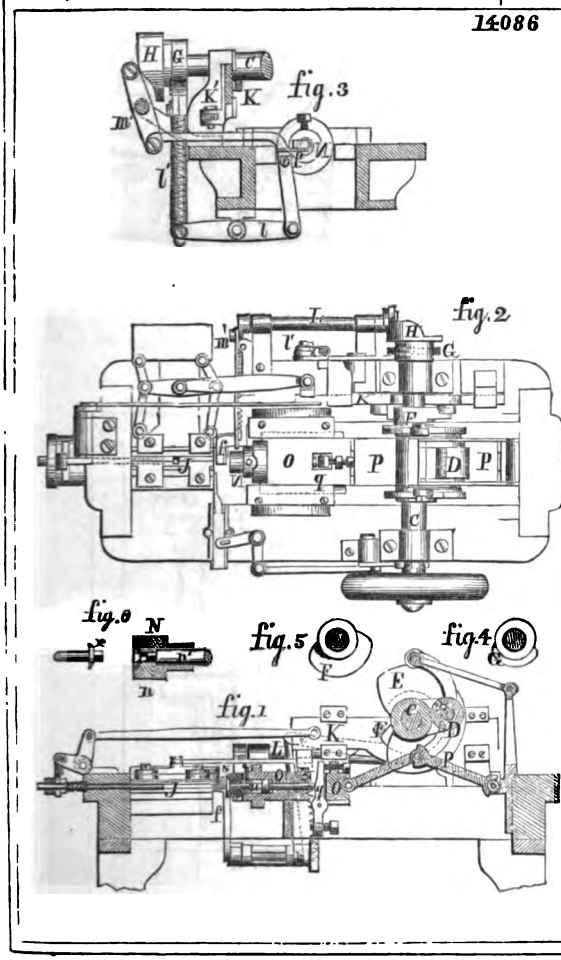

15729

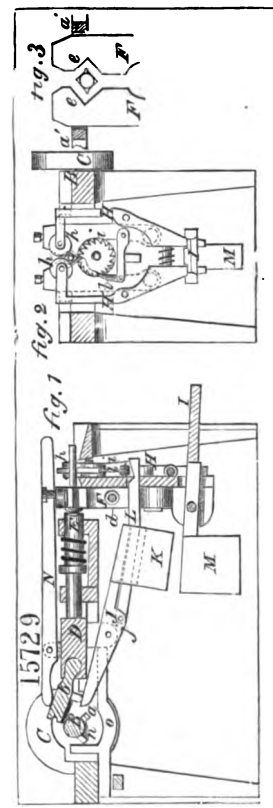

Digitized by Google

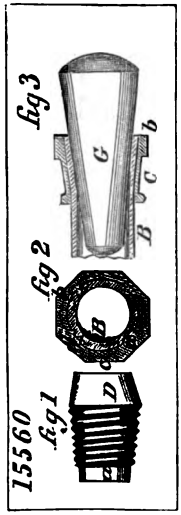

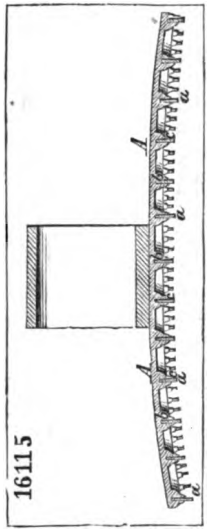

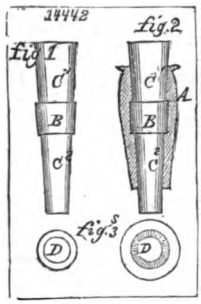

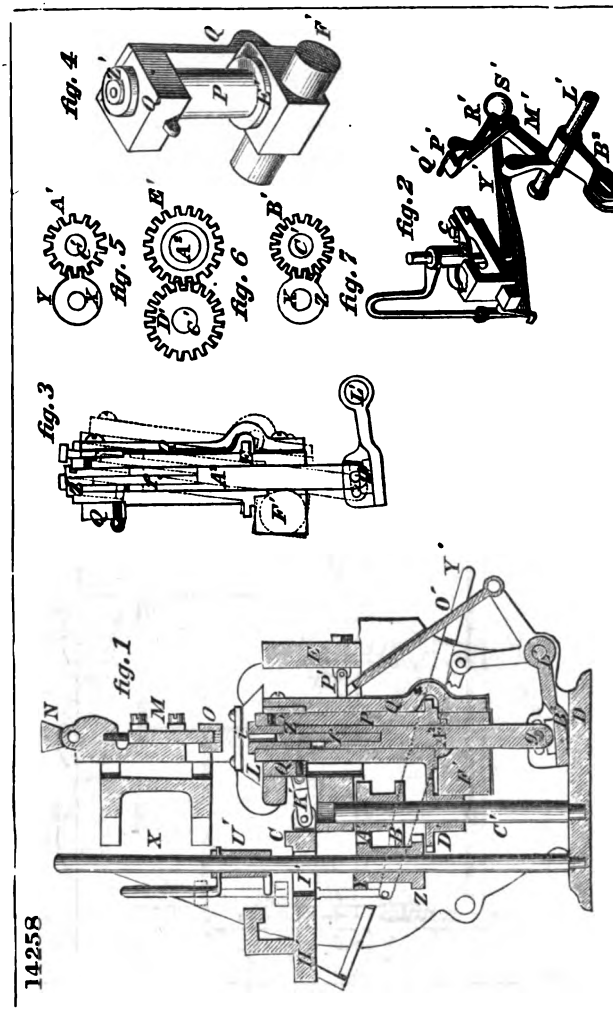

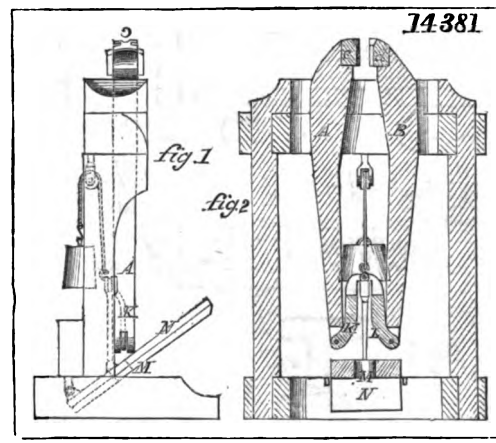

Digitized by Google

14633

fig.1

fig.2

16228

fig.1

fig.2

fig.3

15278

fig 1

fig 2

Digitized by Google

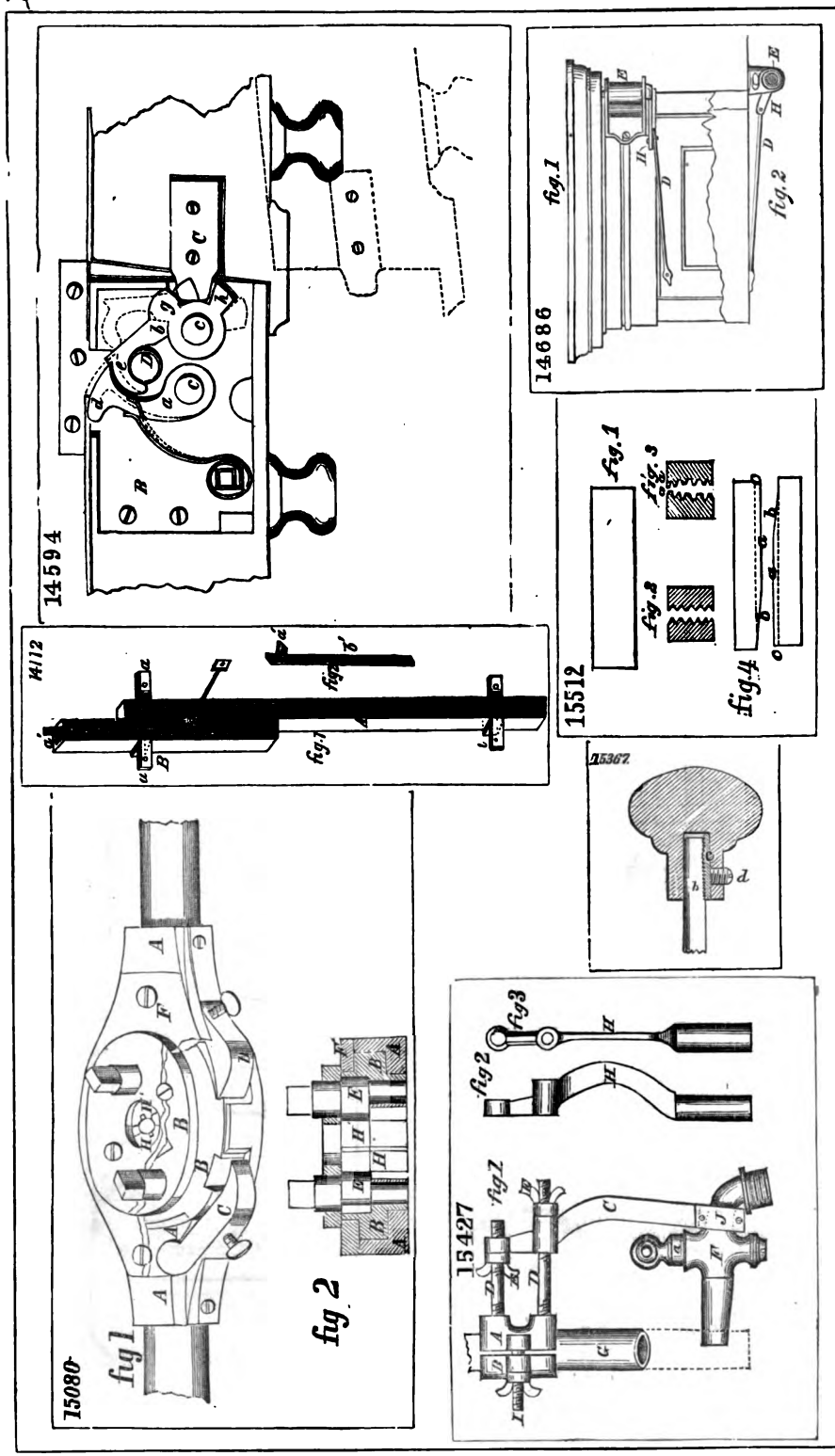

Digitized by Google

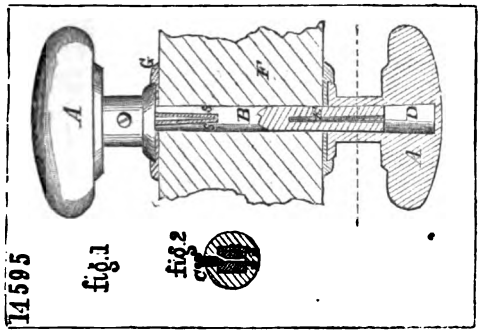

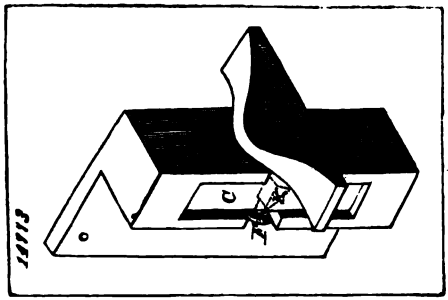

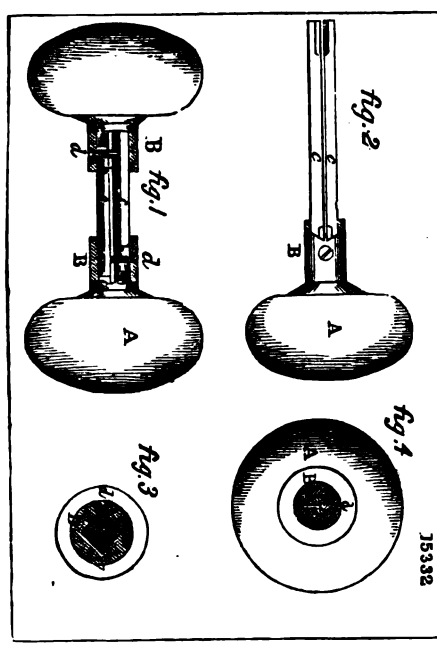

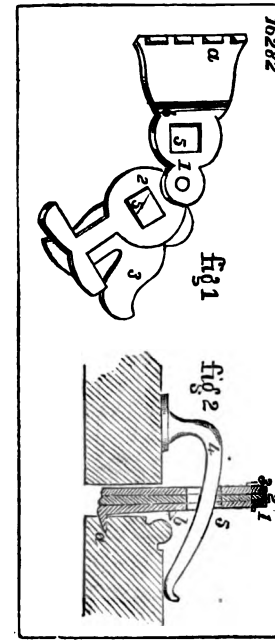

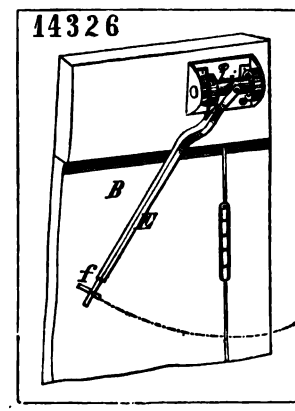

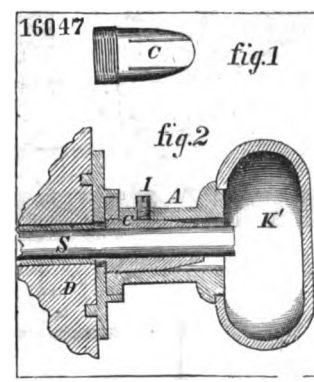

Digitized by Google

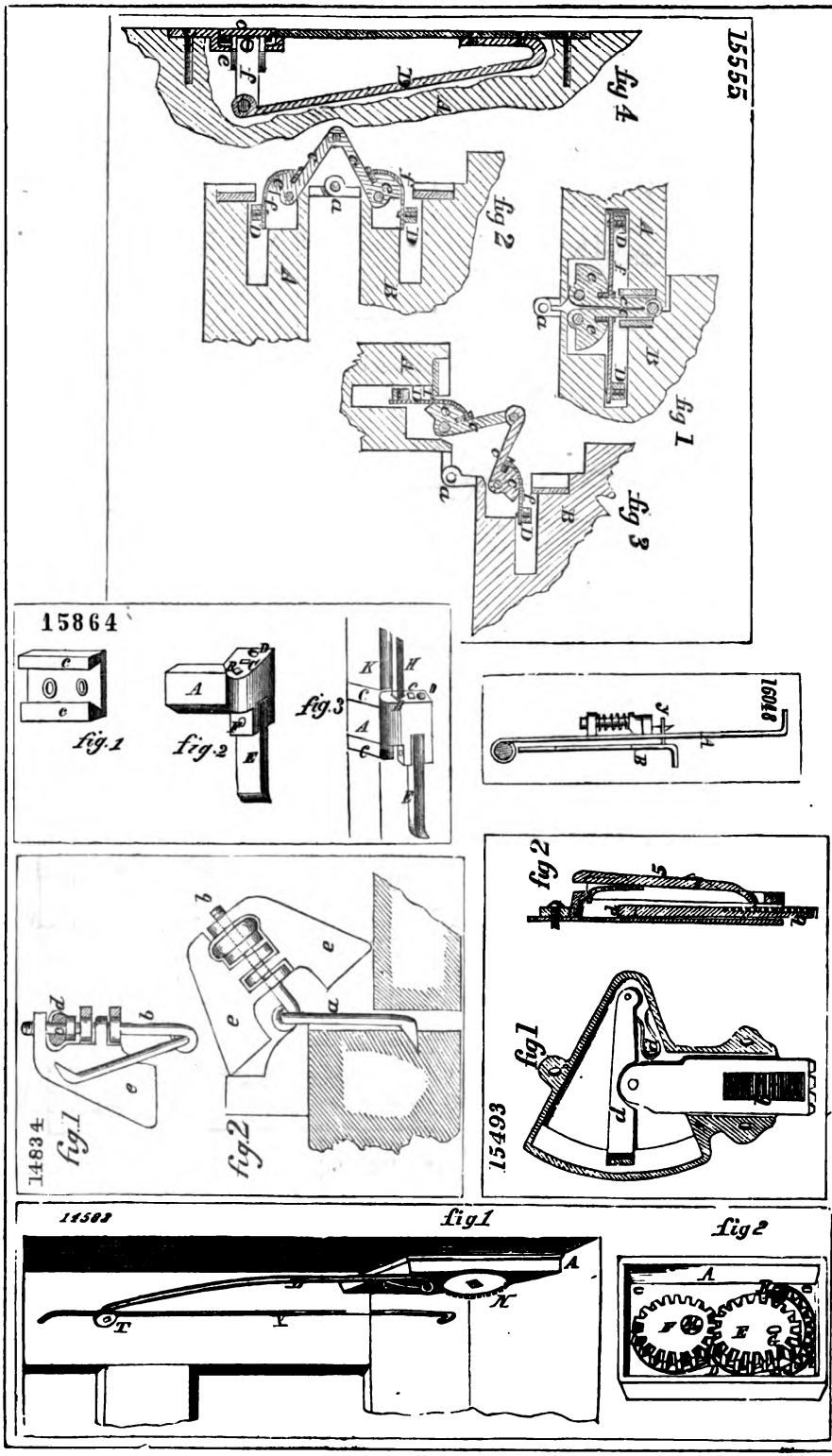
15555
fig 4
fig 2
fig 1
fig 3
15864
fig.1
fig.2
fig.3
16046
14834
fig.1
fig.2
15493
fig1
fig 2
14583
fig1
fig2

15912

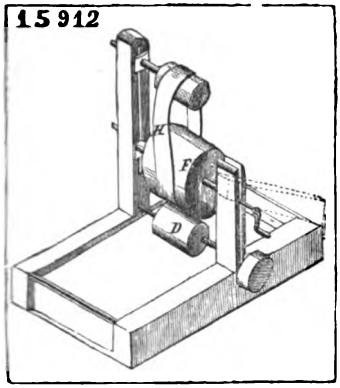

16064

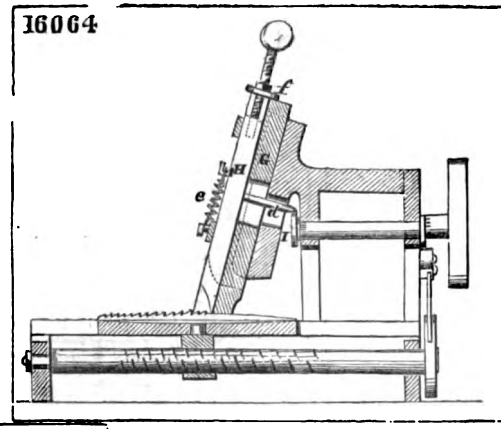

14189

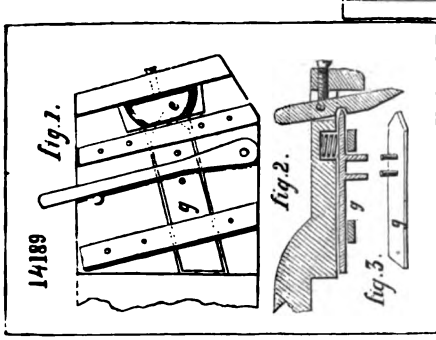

15525

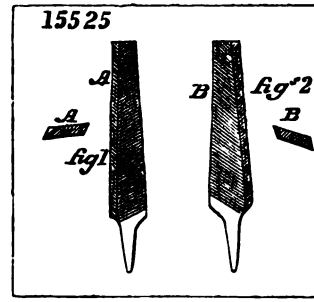

14881

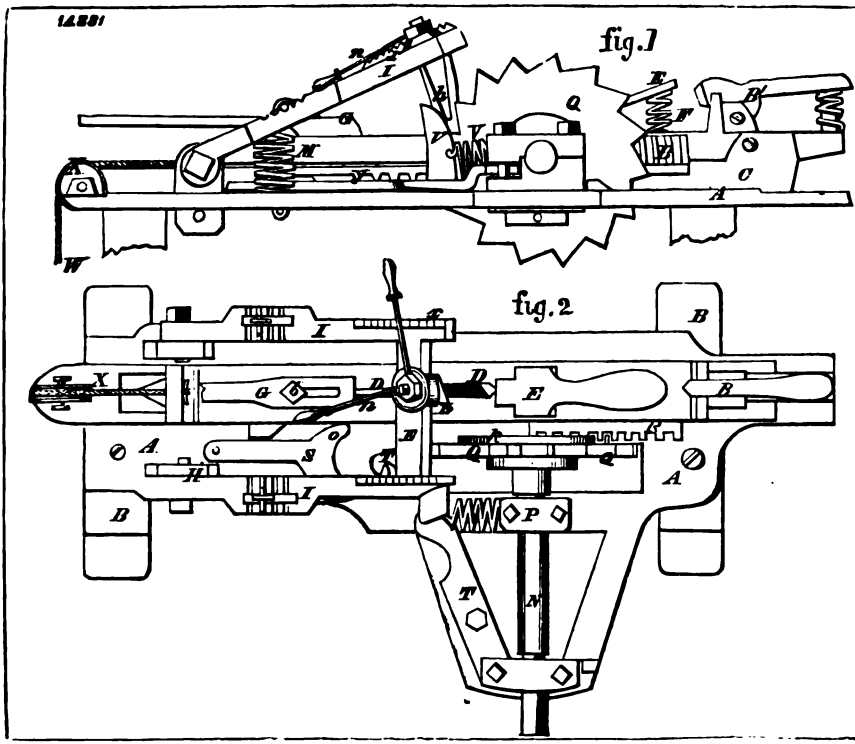

Digitized by Google

15867

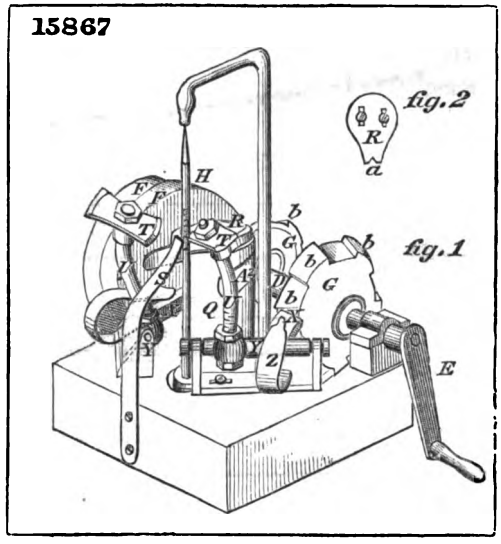

14280

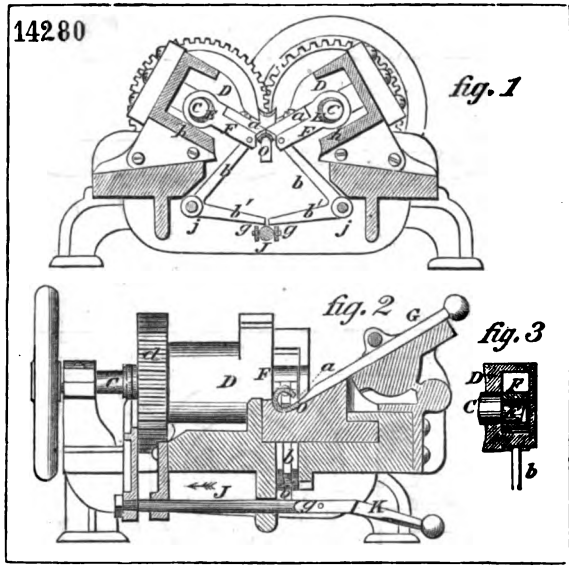

15541

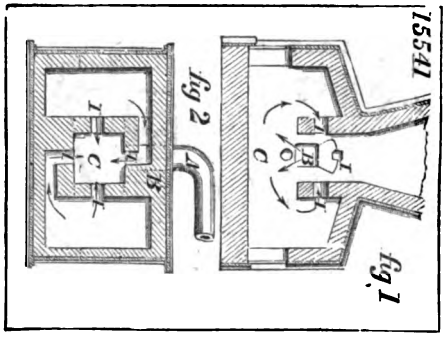

15907

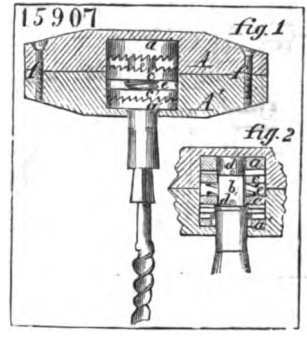

Digitized by Google

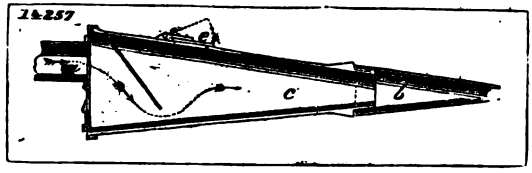

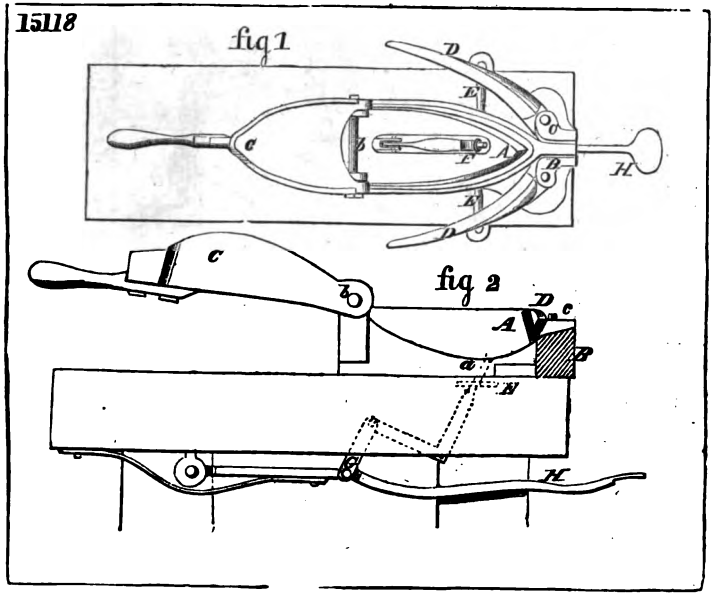

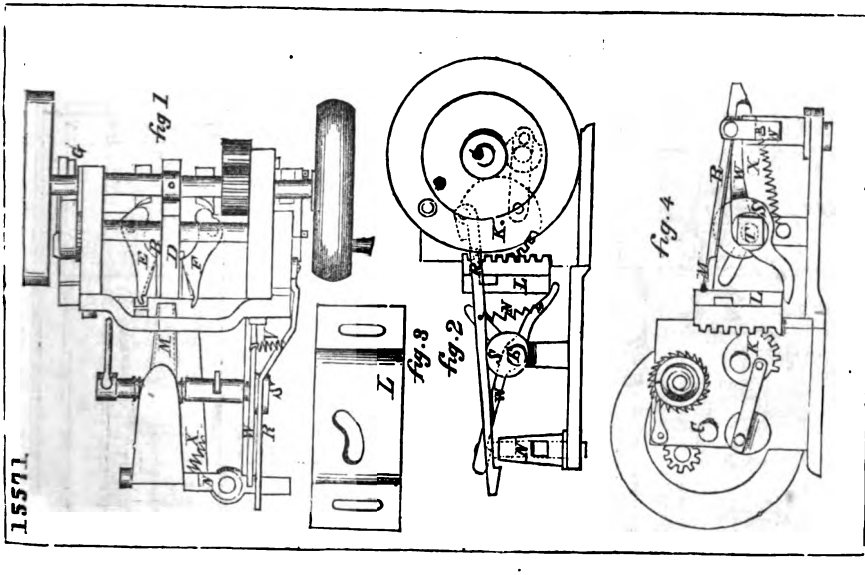

Digitized by Google

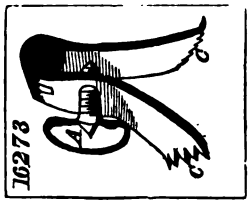

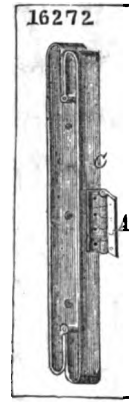

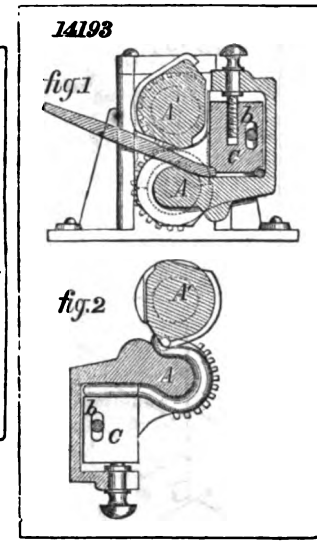

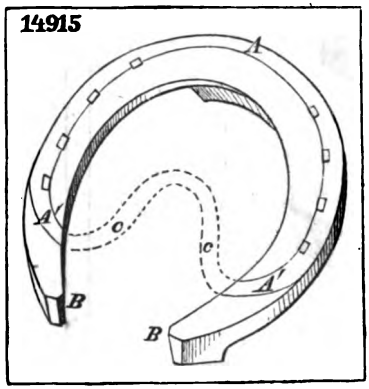

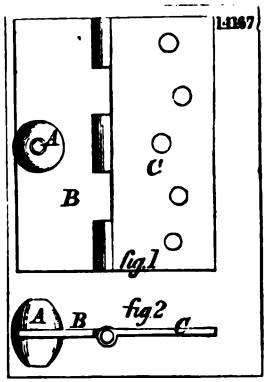

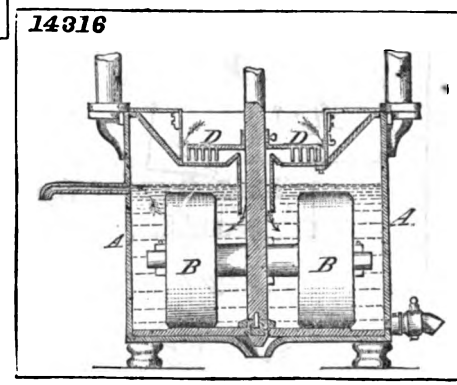

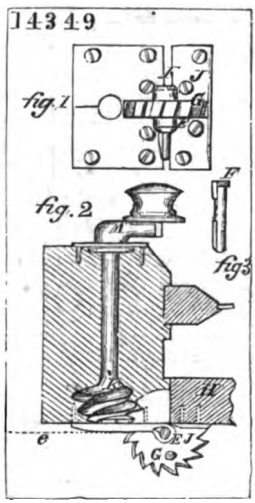

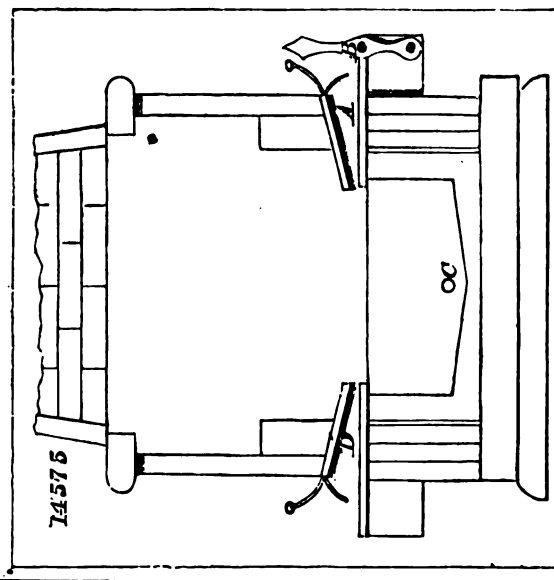

Digitized by Google

15241

fig 1

fig 3

fig 4

fig 2

14852

fig. 3

fig. 1

fig. 2

14847 fig. 1

fig. 2

Digitized by Google

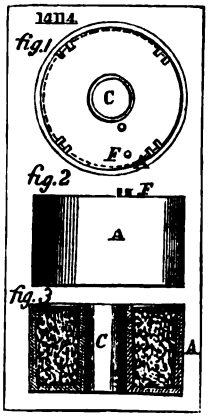

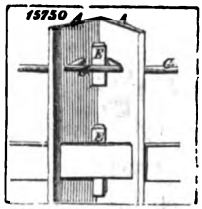

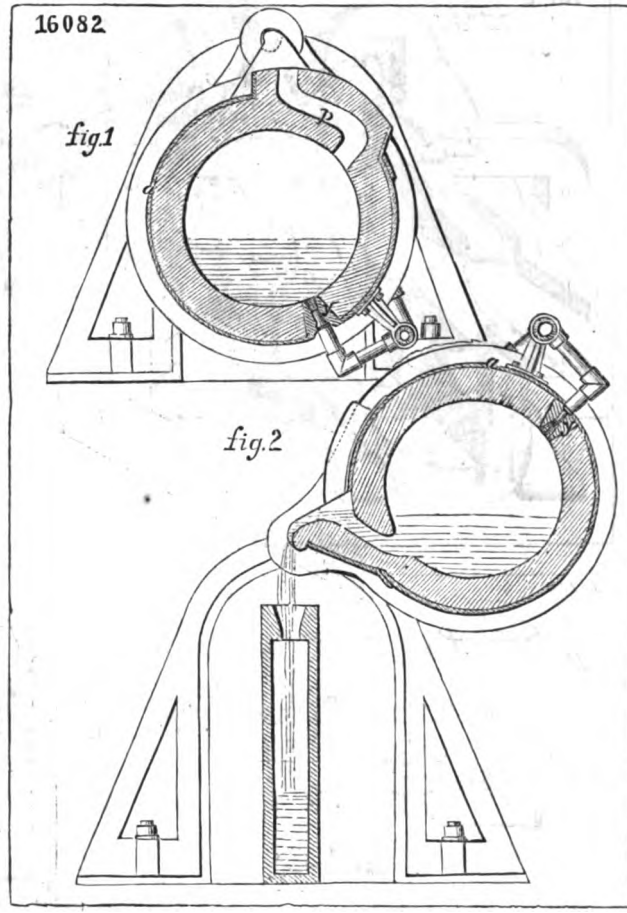

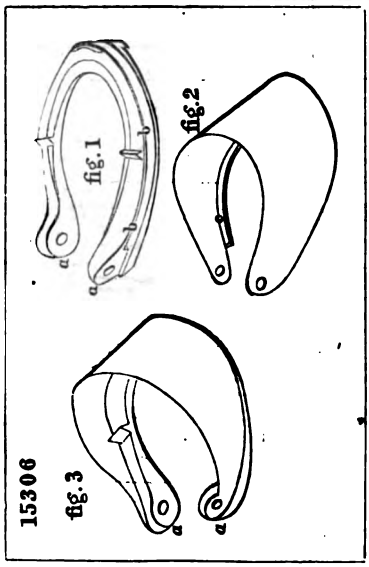

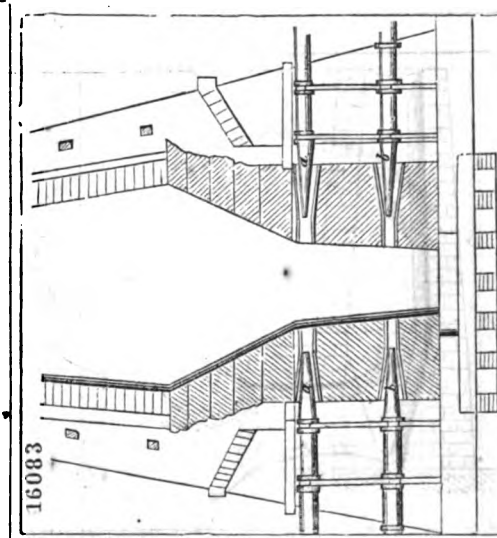

Digitized by Google

16126

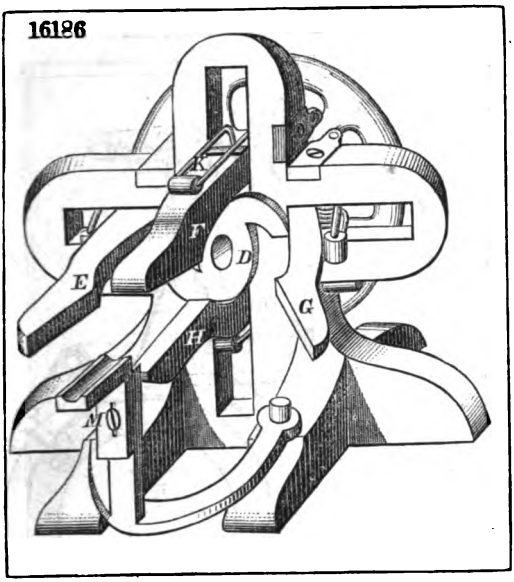

15961

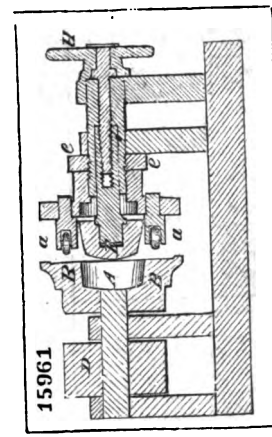

15159

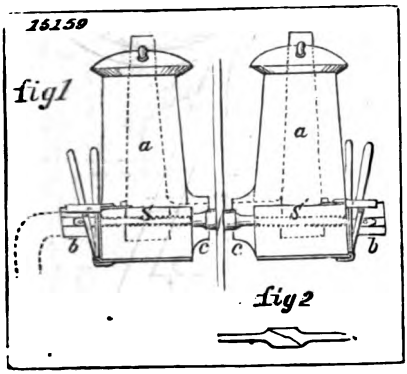

15588

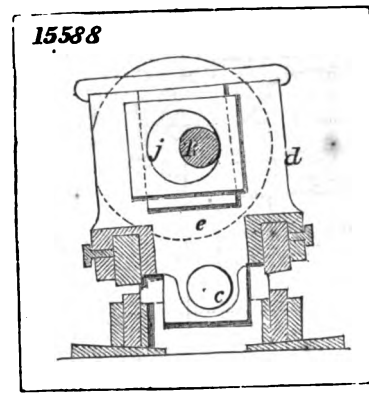

14827

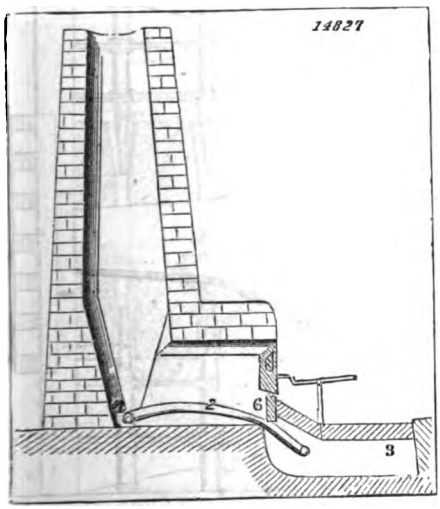

14412

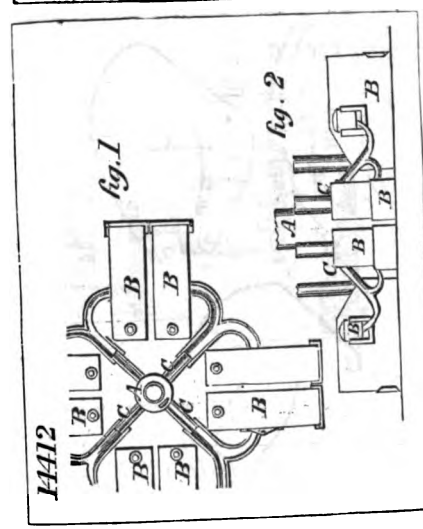

Digitized by Google

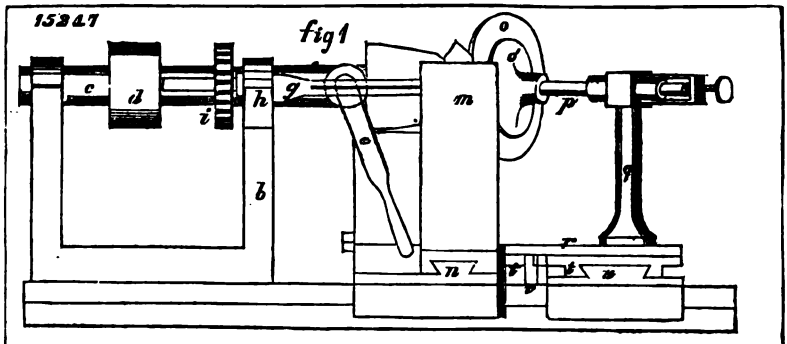

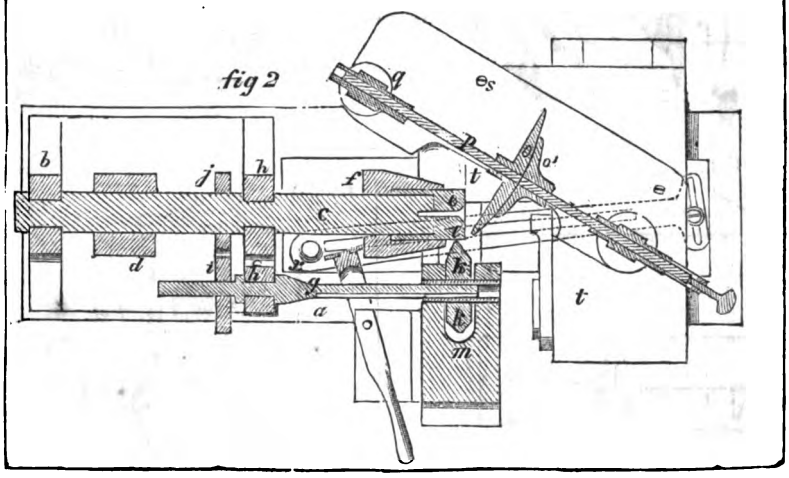

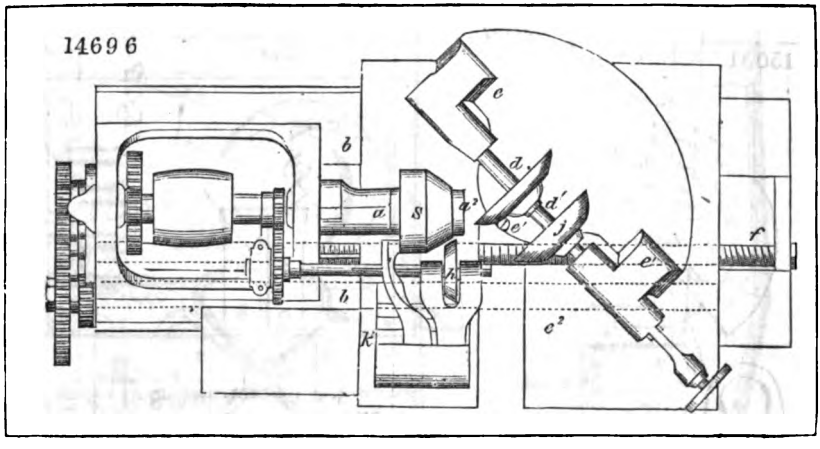

Digitized by Google

14887

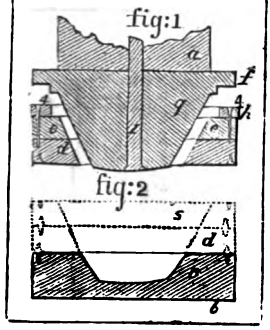

15136 fig 1

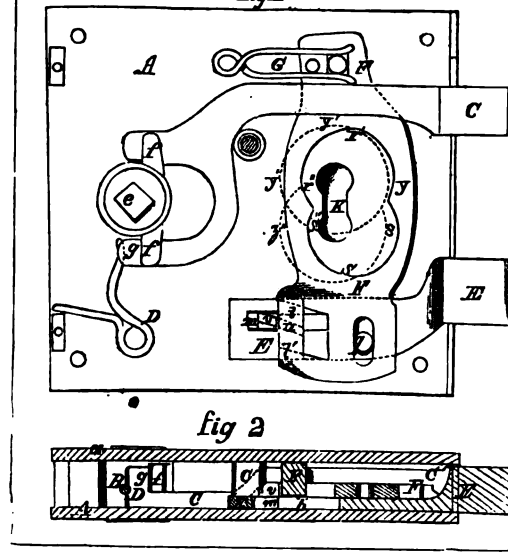

14,058

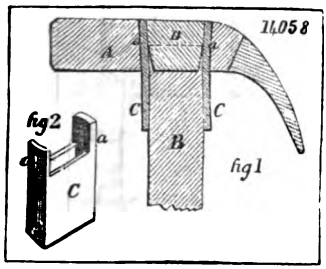

15772

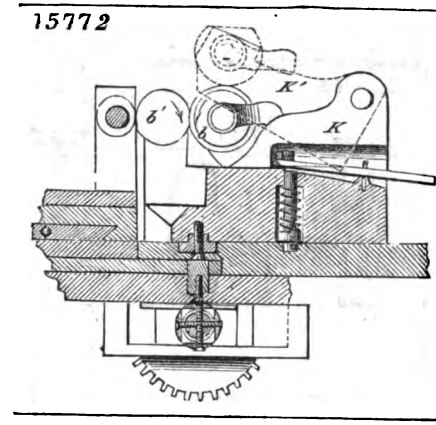

15708

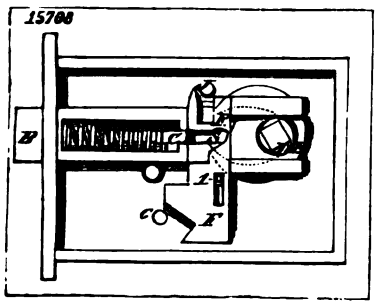

150.31 fig 1

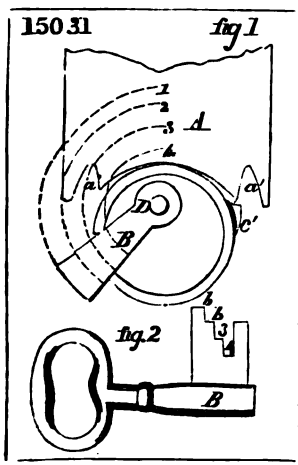

fig 1 14209

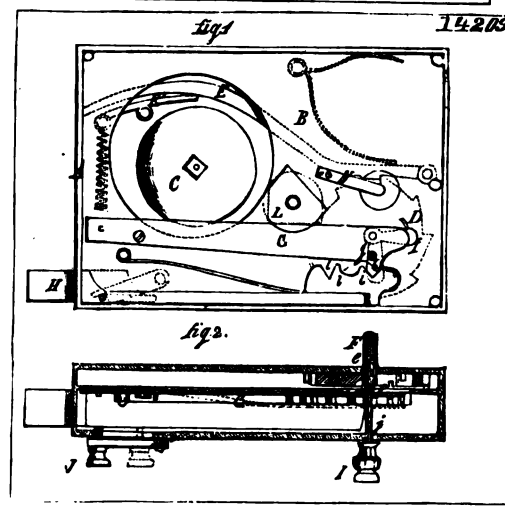

Digitized by Google

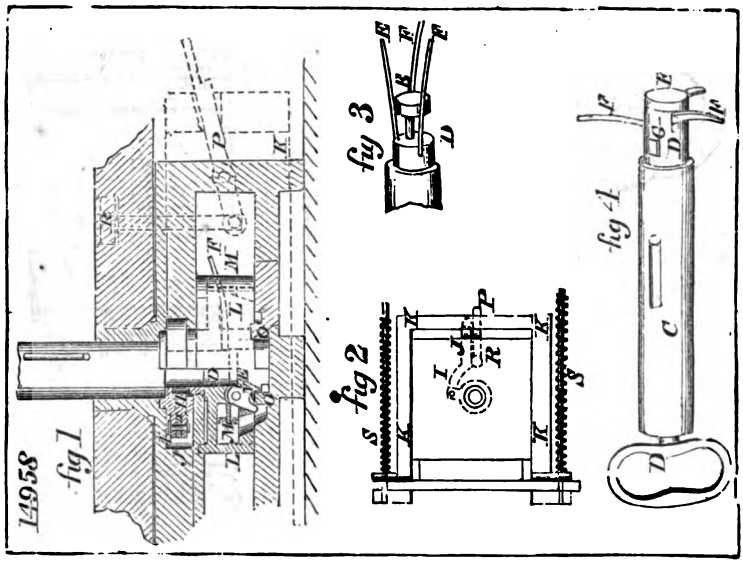

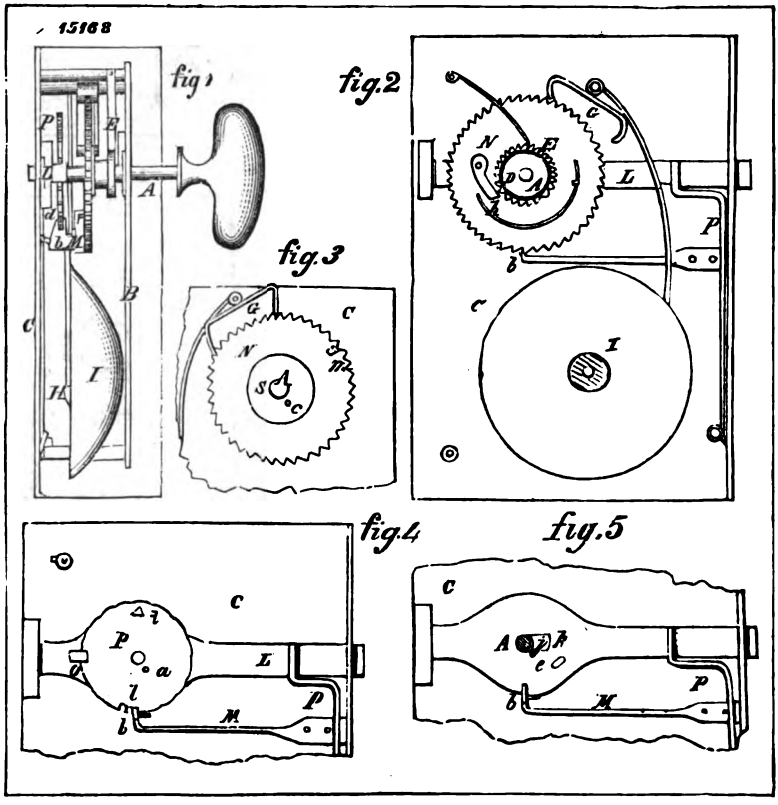

Digitized by Google

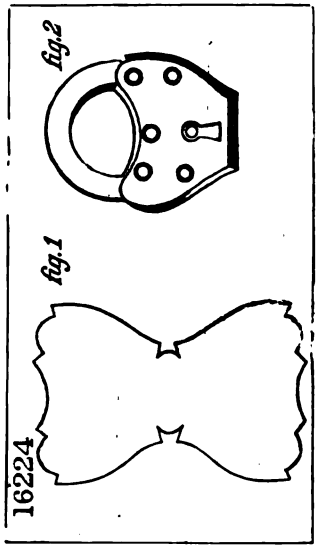

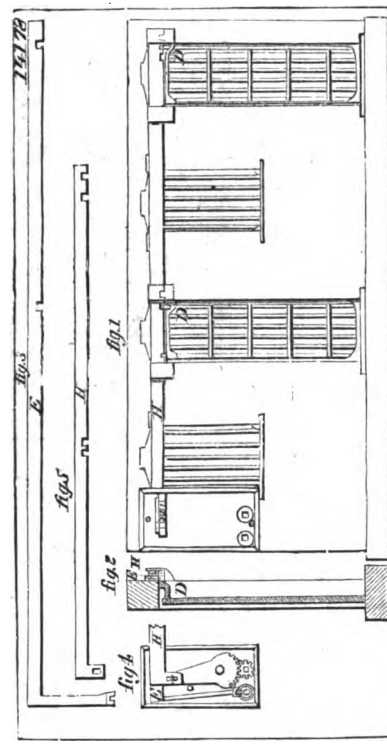

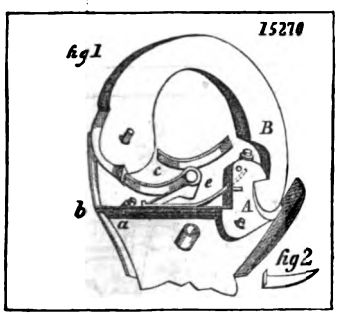

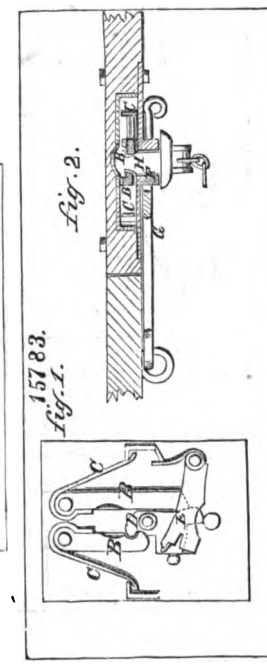

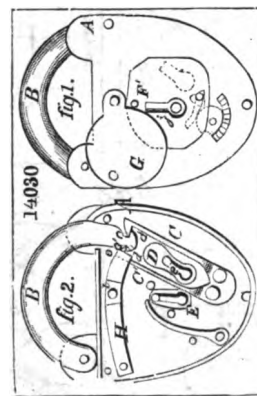

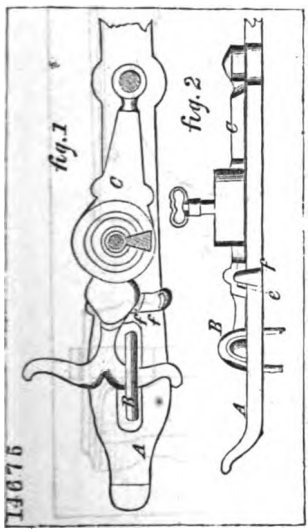

Digitized by Google

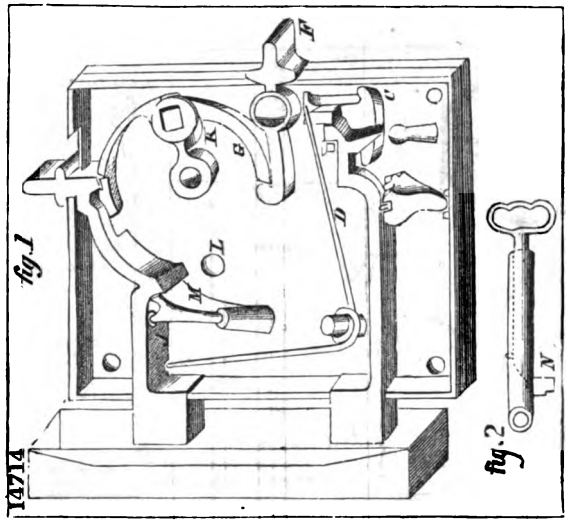

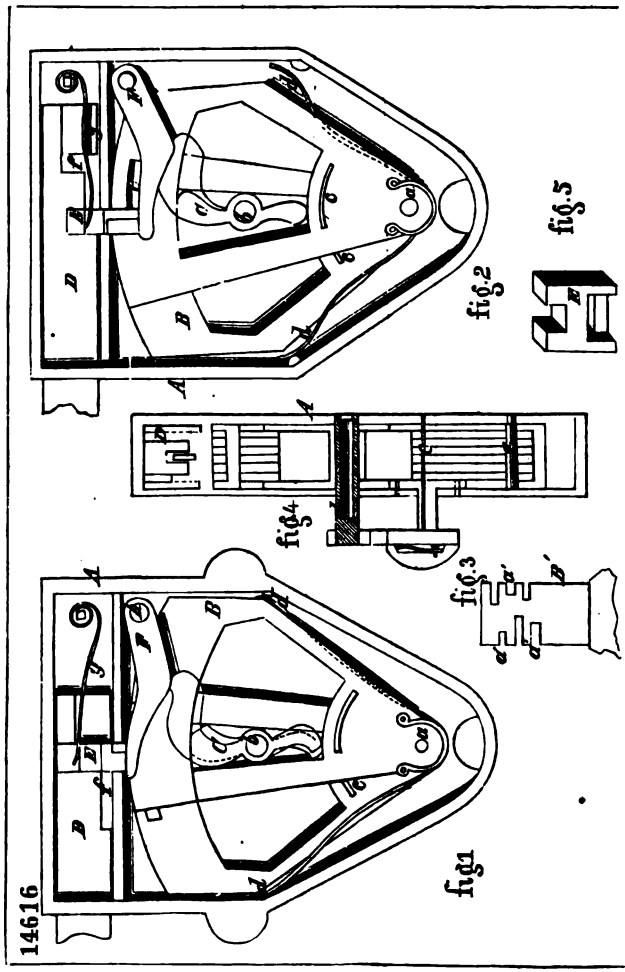

Digitized by Google

15124

fig 1

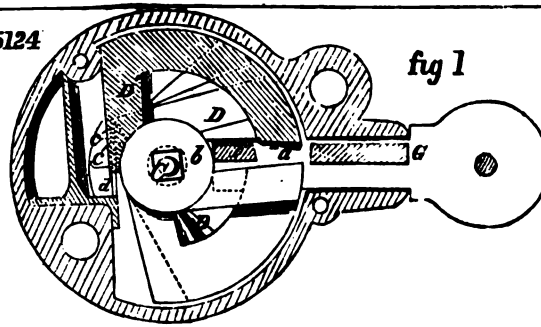

fig 2

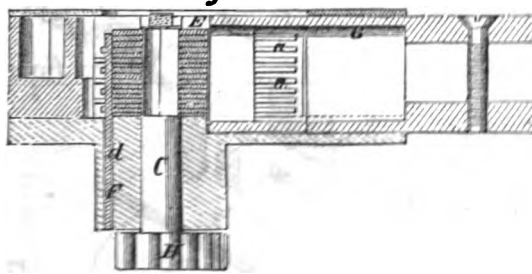

15489

fig. 4

fig. 3

fig. 5

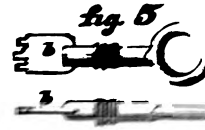

fig. 1

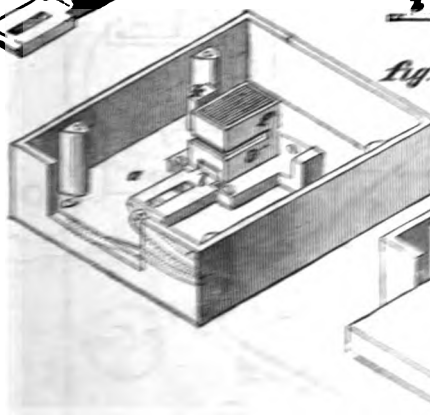

fig. 2

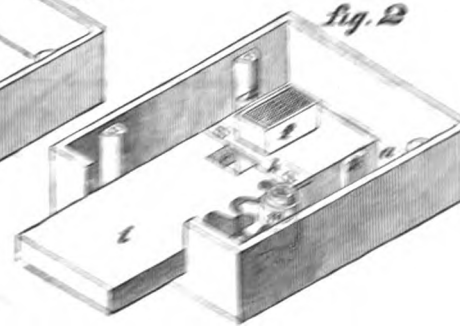

Digitized by Google

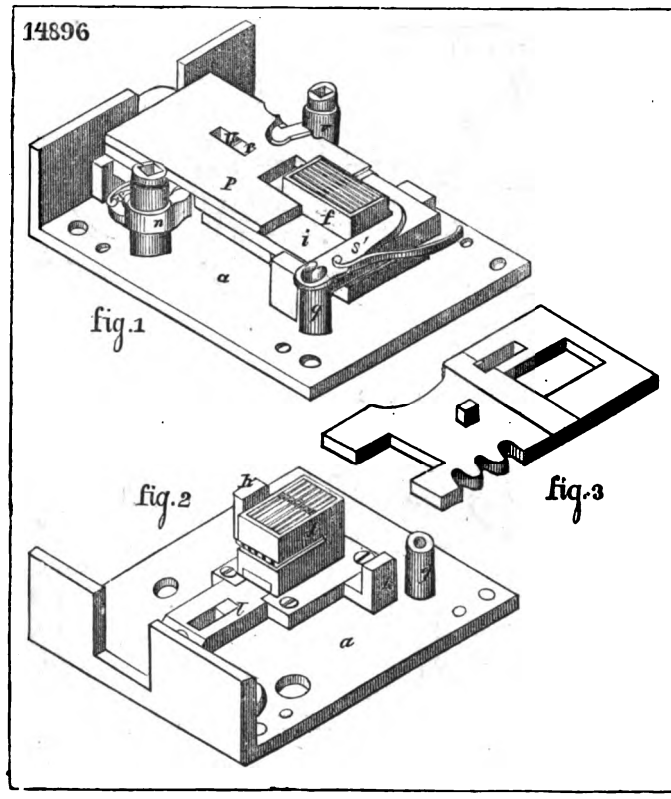

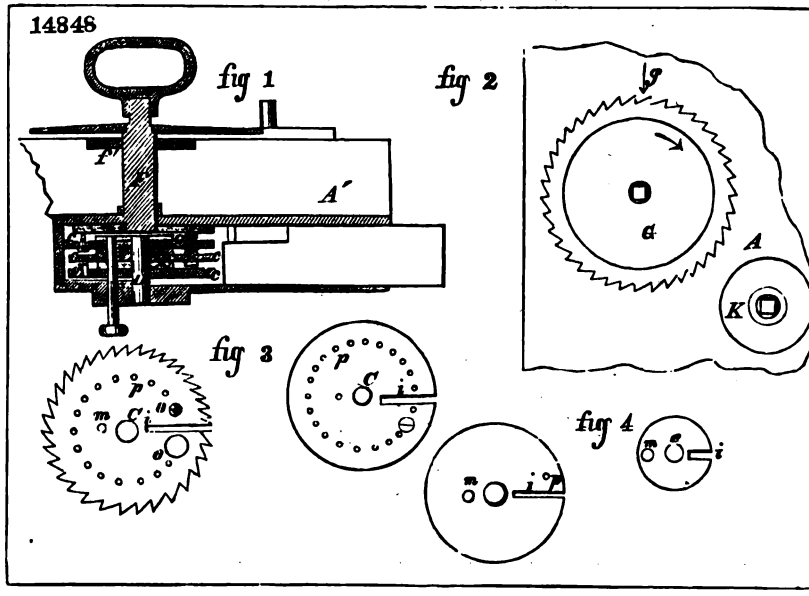

Digitized by Google

15962

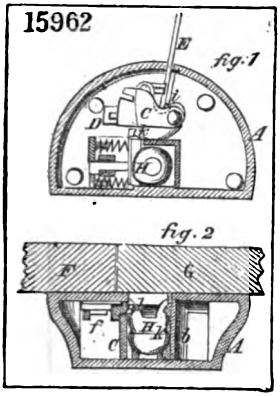

15589

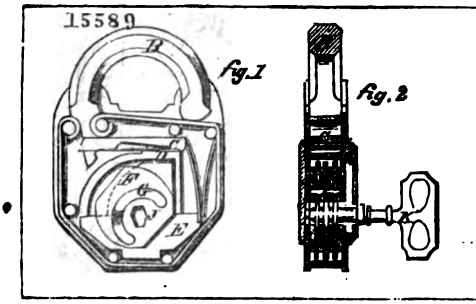

15239

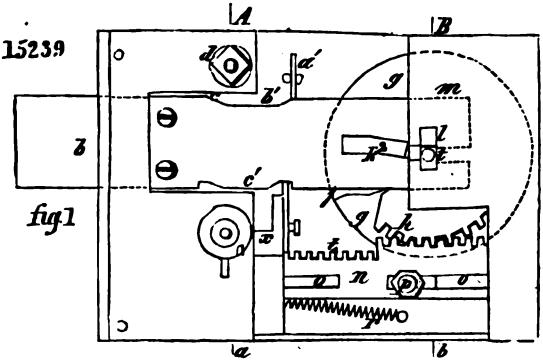

fig. 1

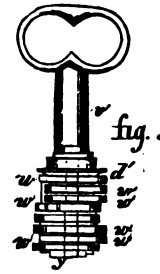

fig. 5

fig. 4 Cc

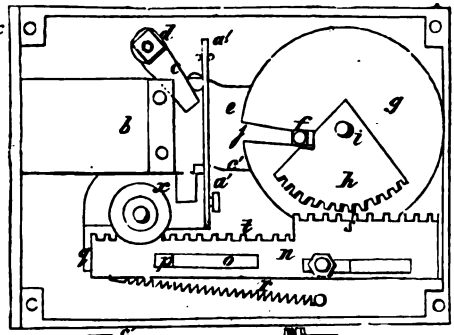

fig. 6

fig. 2 Aa

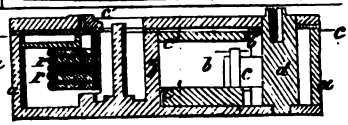

fig. 3 Bb

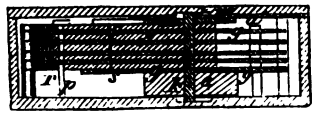

Digitized by Google

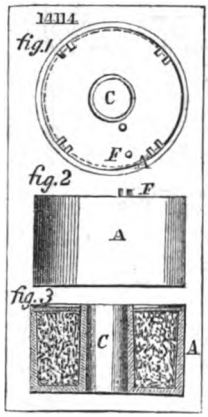

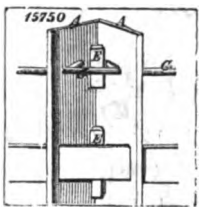

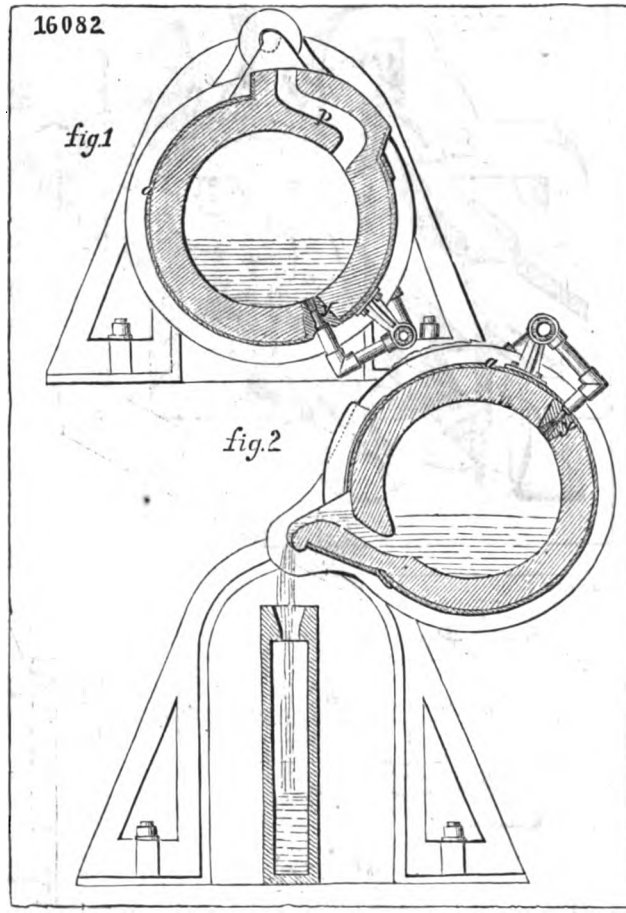

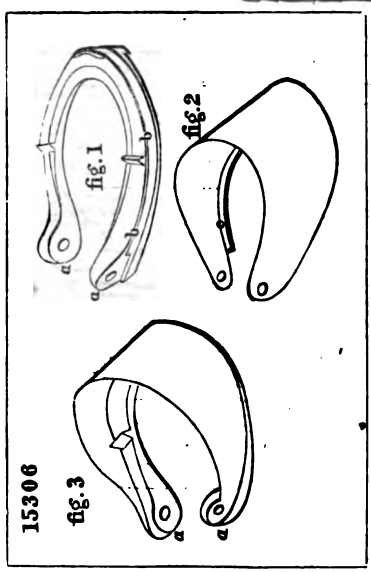

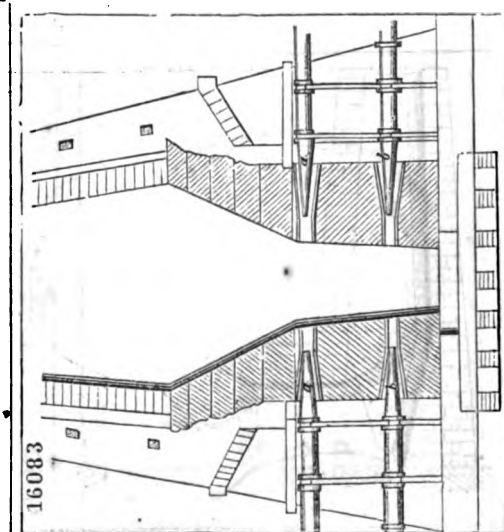

Digitized by Google

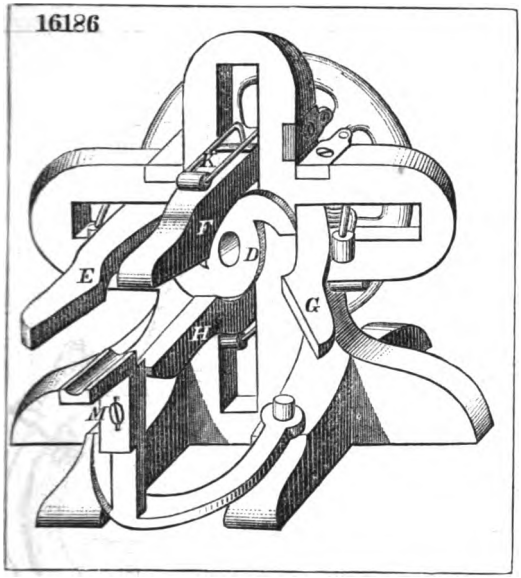

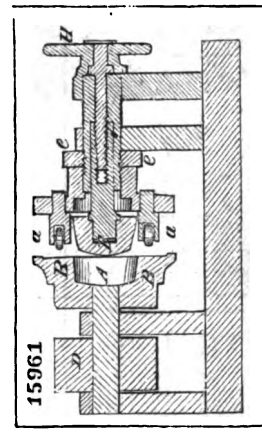

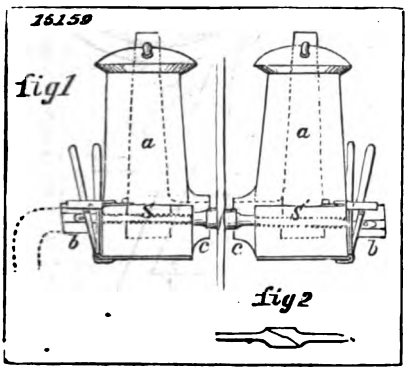

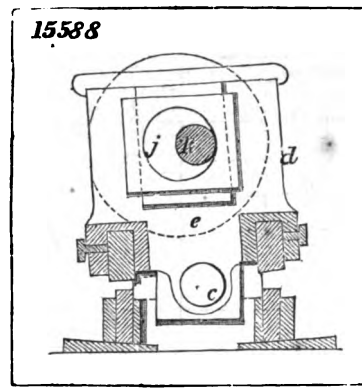

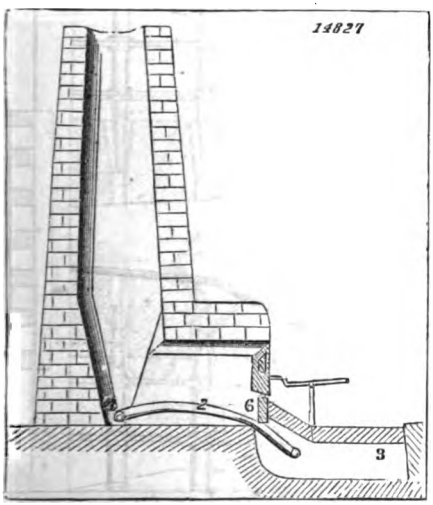

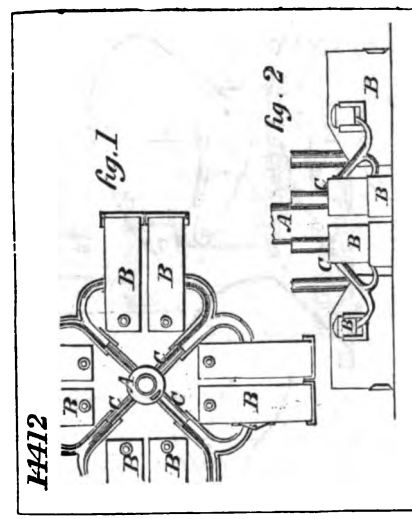

Digitized by Google

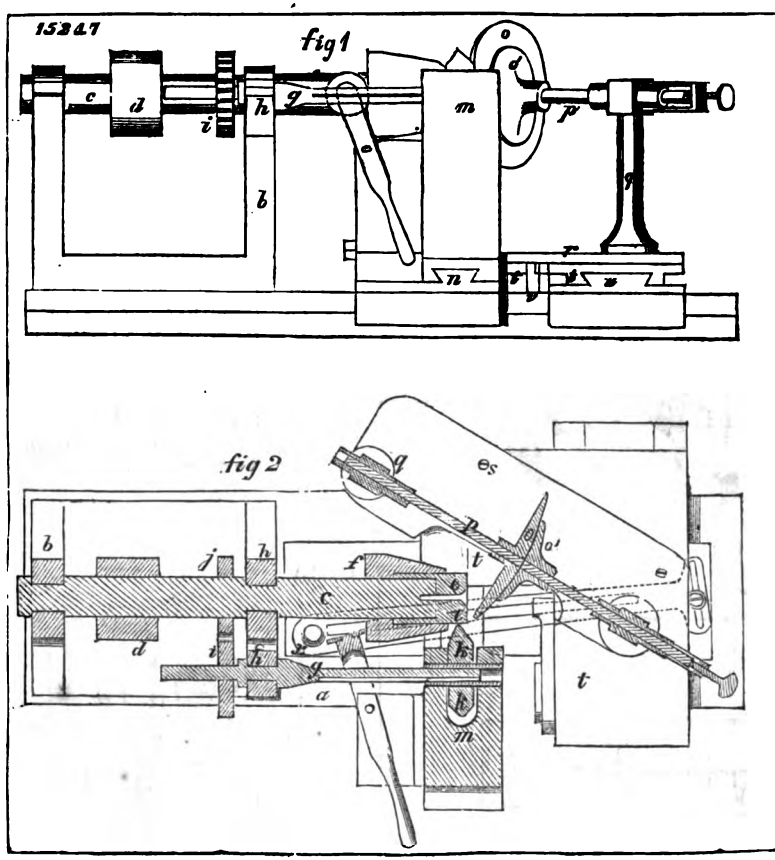

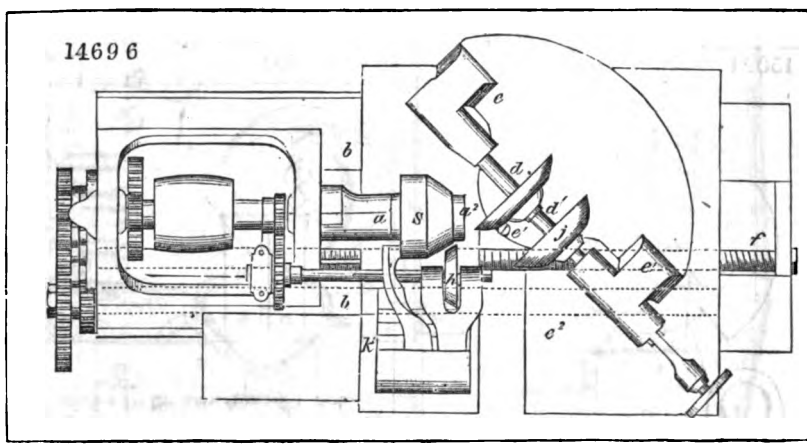

Digitized by Google

14887

fig:1

fig:2

15136 fig 1

fig 2

14058

fig 2

fig 1

15772

15708

15031 fig 1

fig 2

fig 1 14209

fig 2.

Digitized by Google

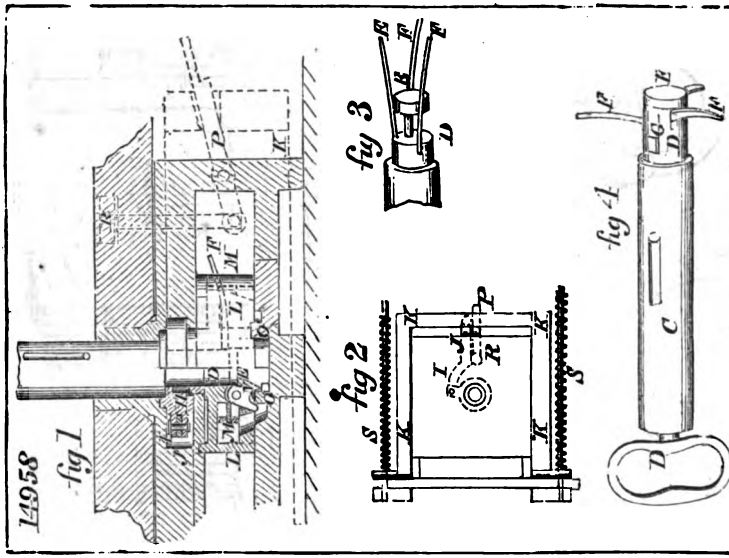

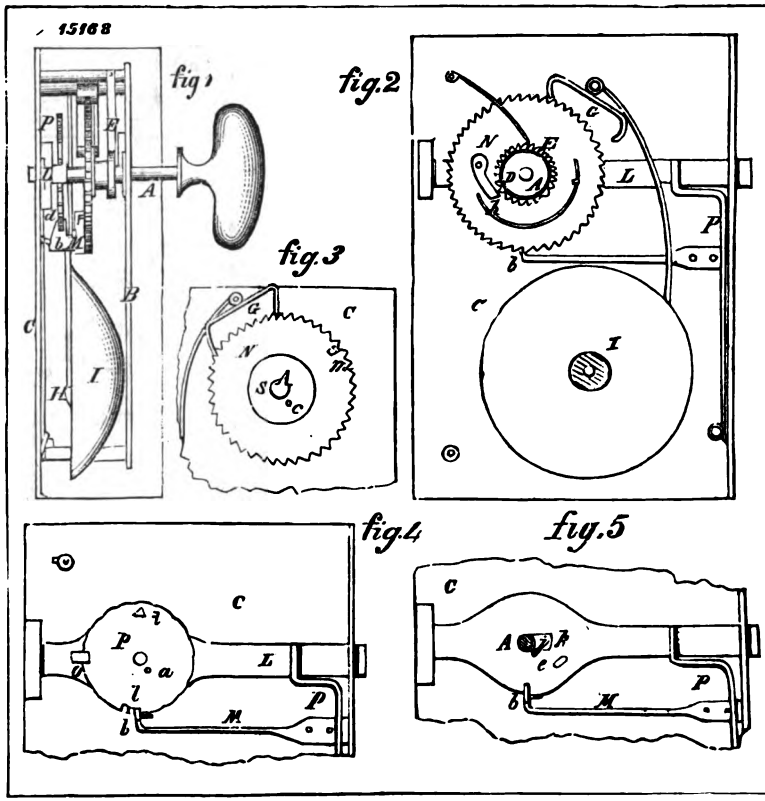

Digitized by Google

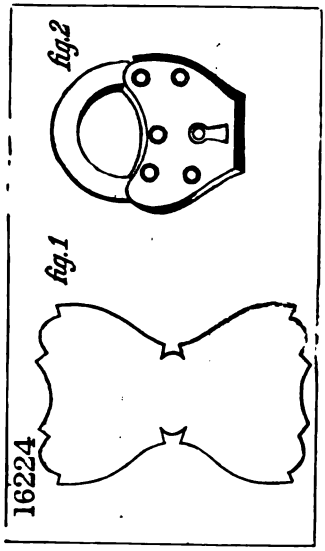

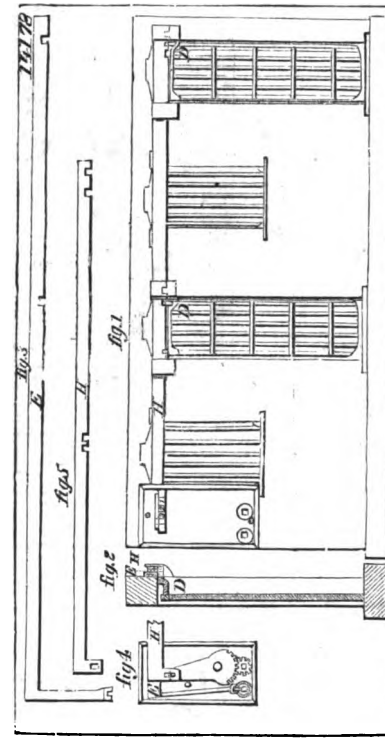

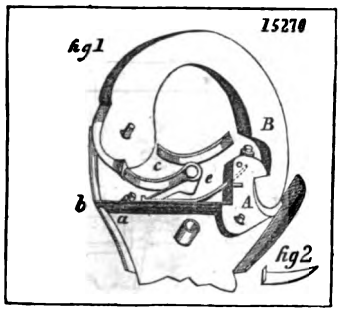

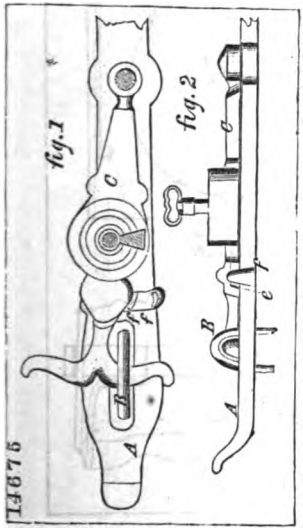

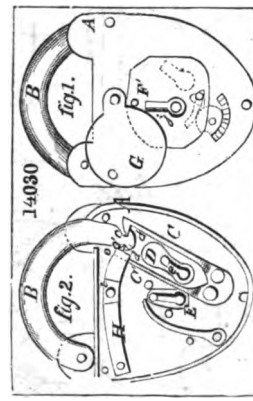

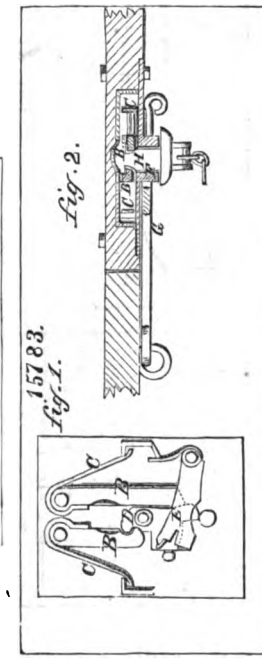

Digitized by Google

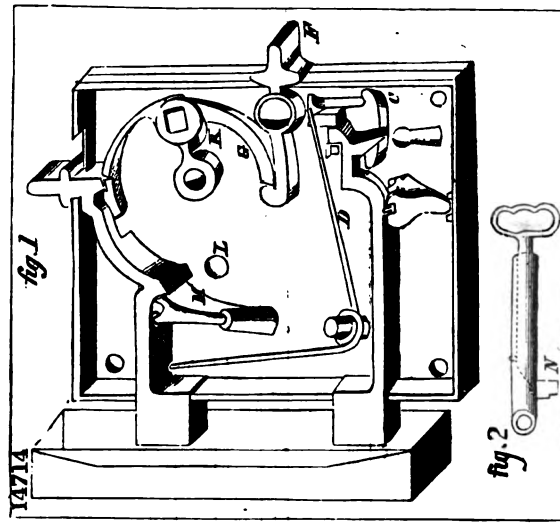

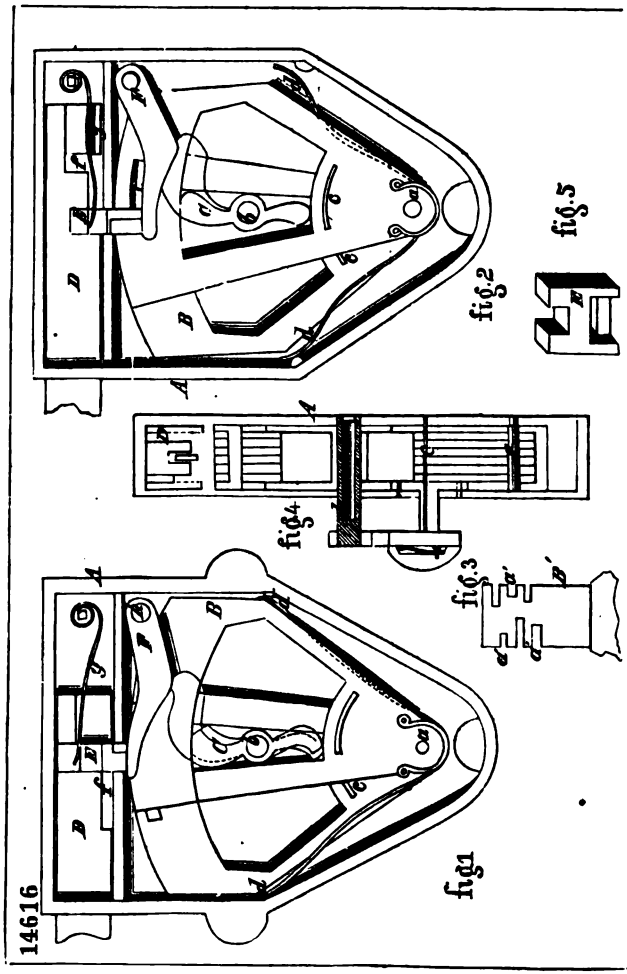

Digitized by Google

15124

fig 1

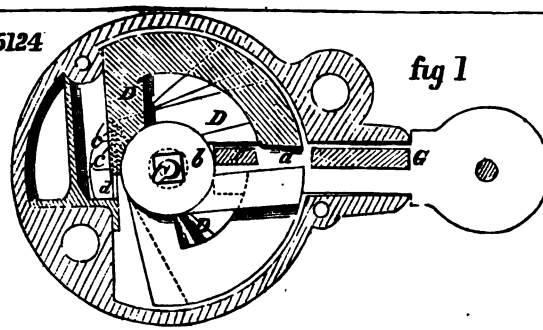

fig 2

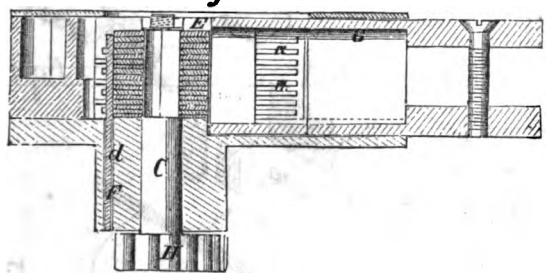

15489

fig. 3

fig. 4

fig. 5

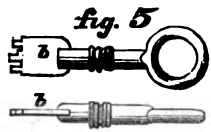

fig. 1

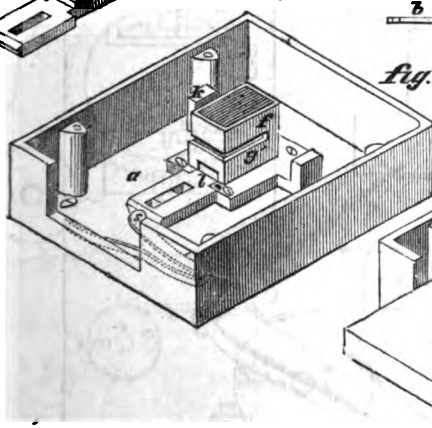

fig. 2

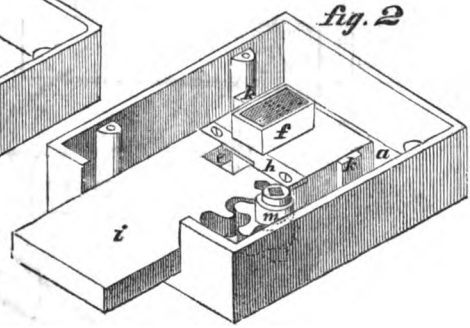

Digitized by Google

14896

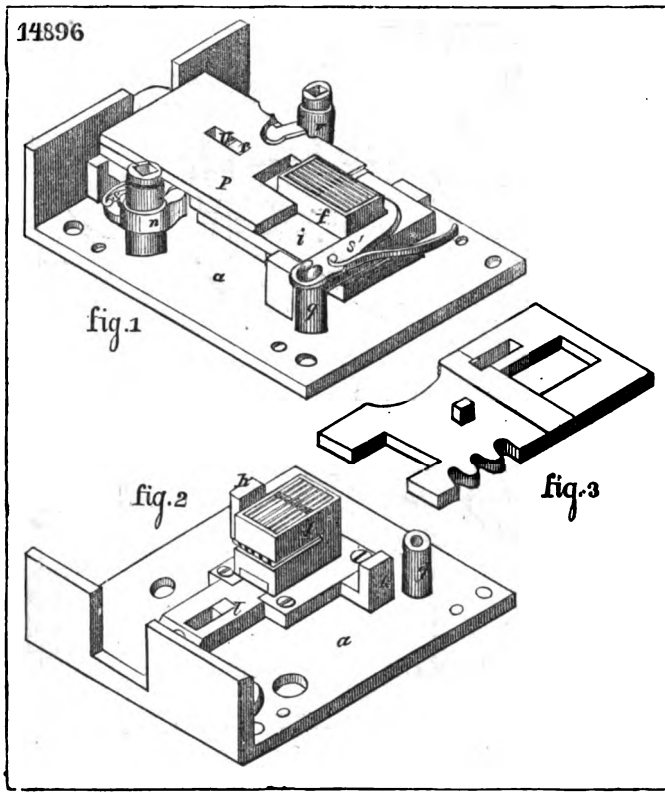

14848

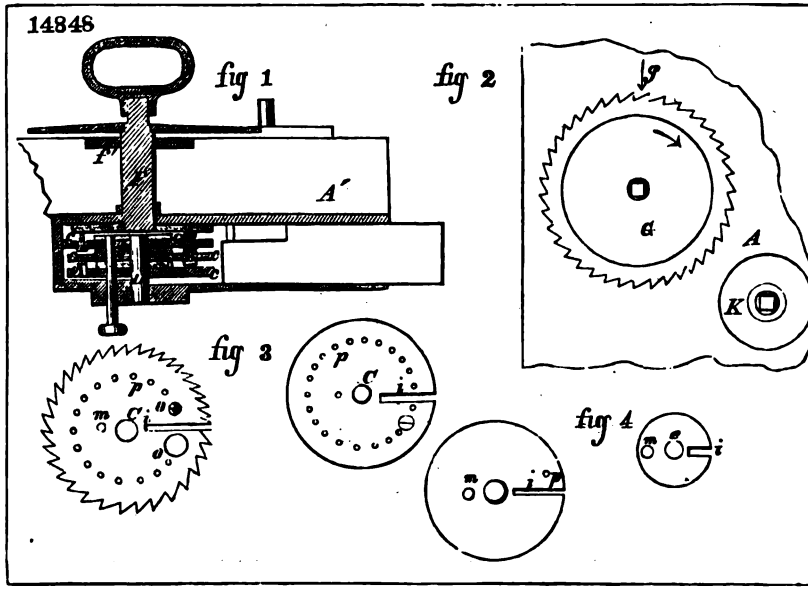

Digitized by Google

15962

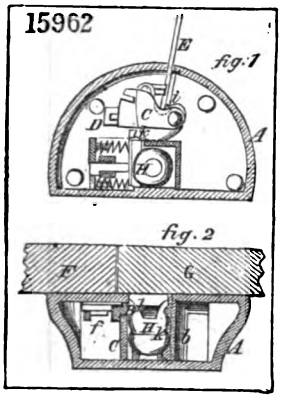

15589

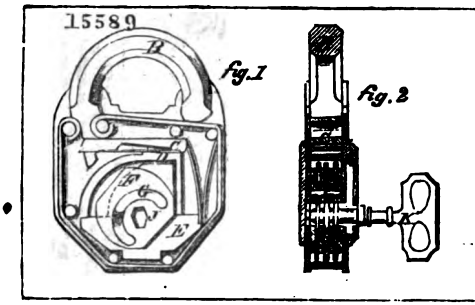

15239

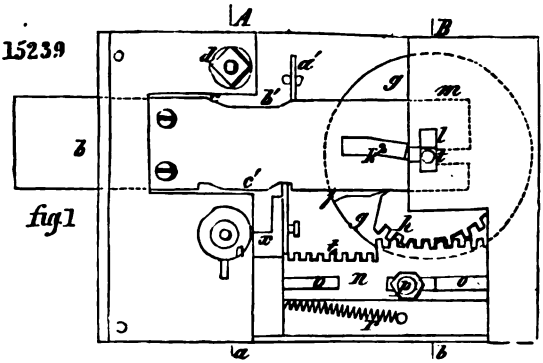

fig. 1

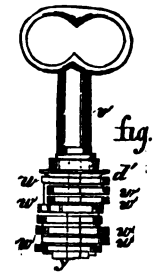

fig. 5

fig. 4 Cc

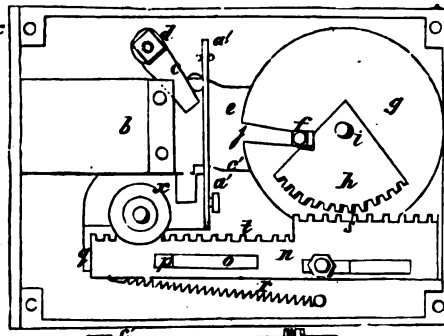

fig. 6

fig. 2 Aa

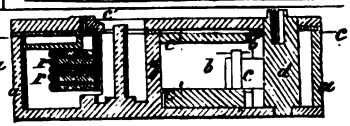

fig. 3 Bb

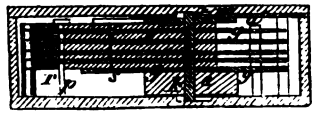

Digitized by Google

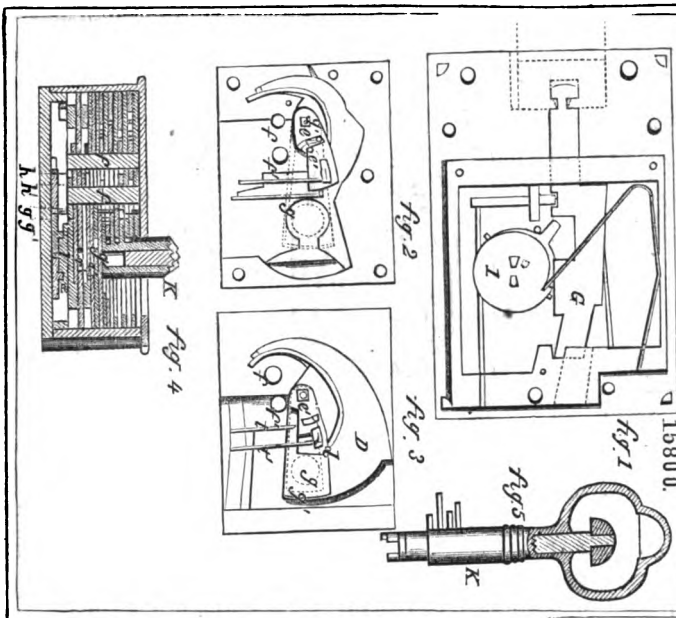

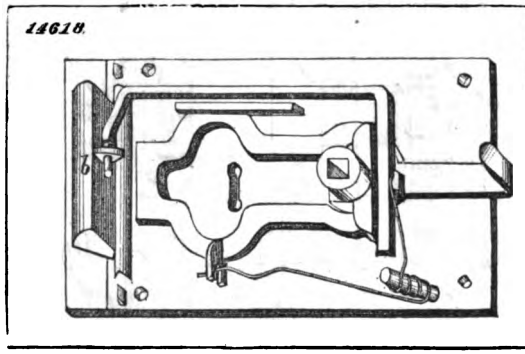

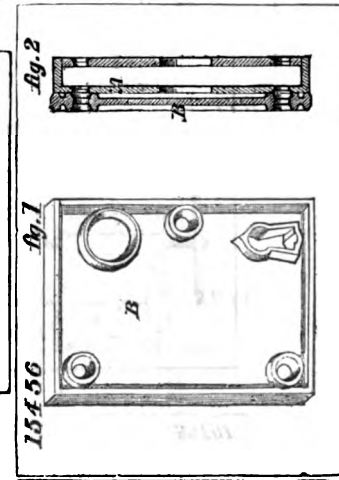

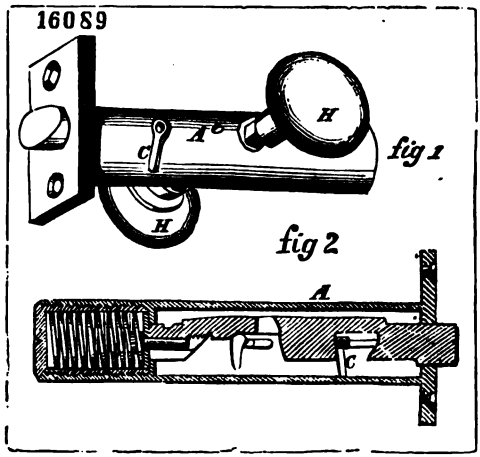

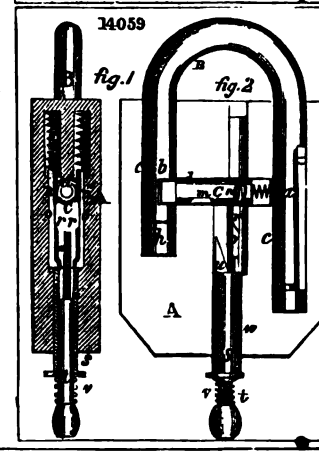

Digitized by Google

16001

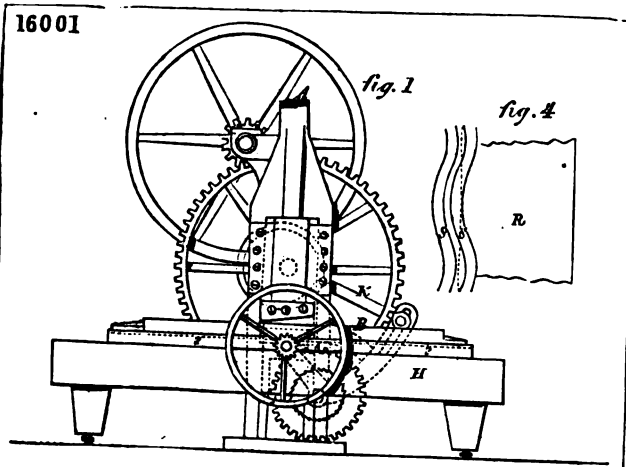

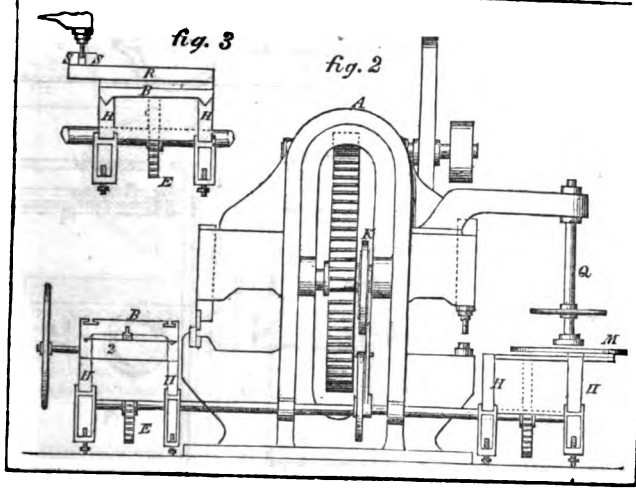

16166

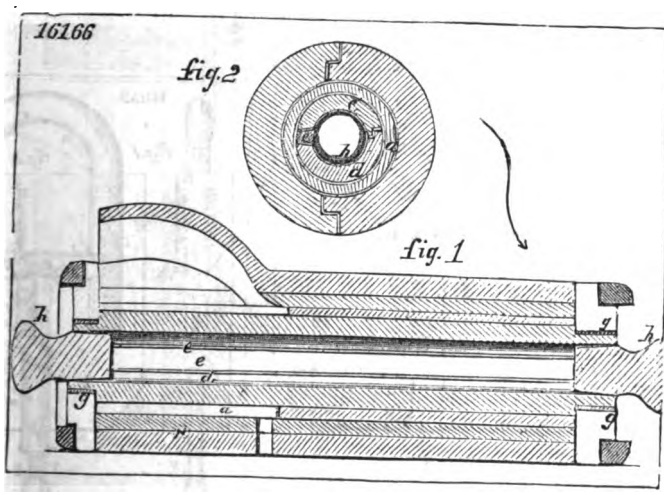

Digitized by Google

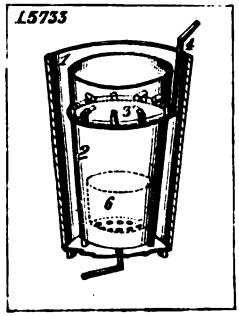

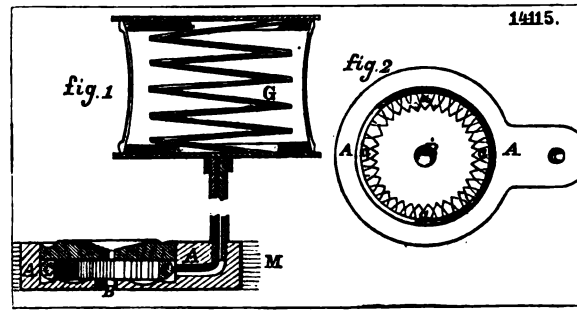

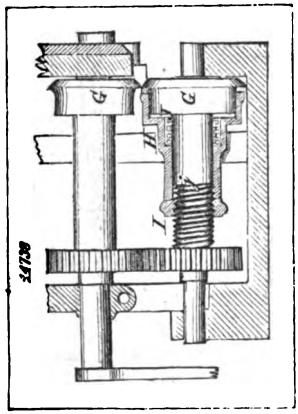

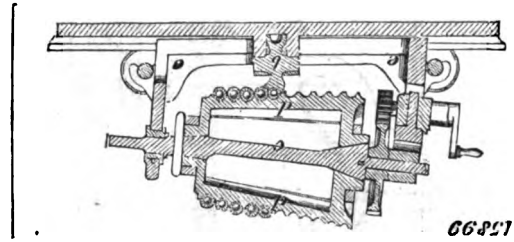

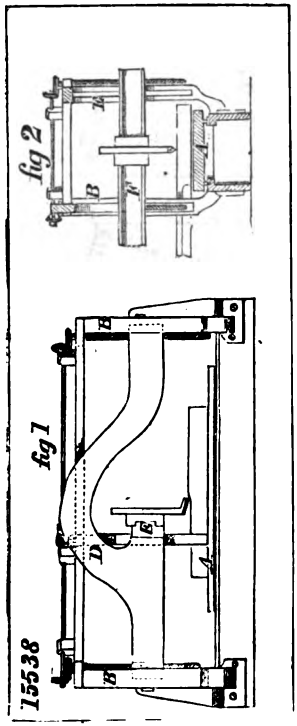

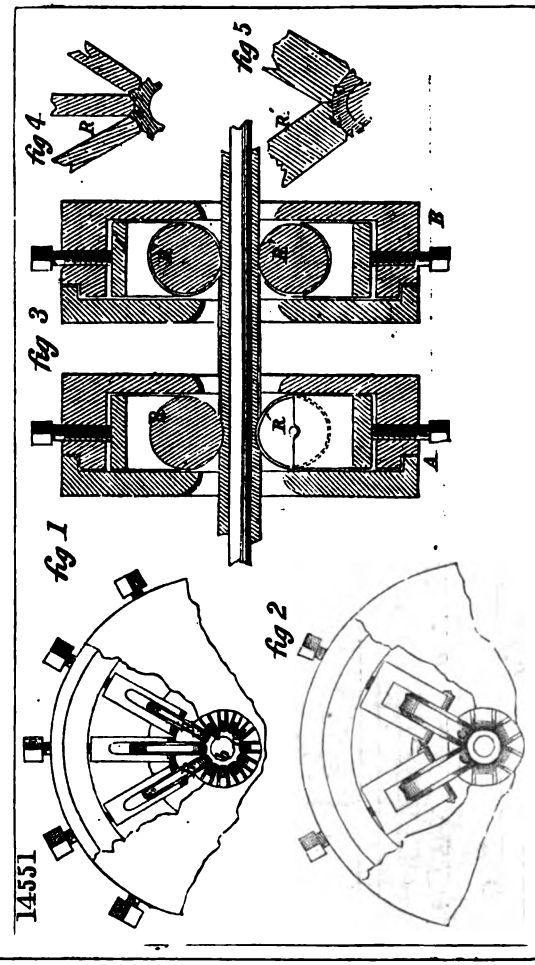

Digitized by Google

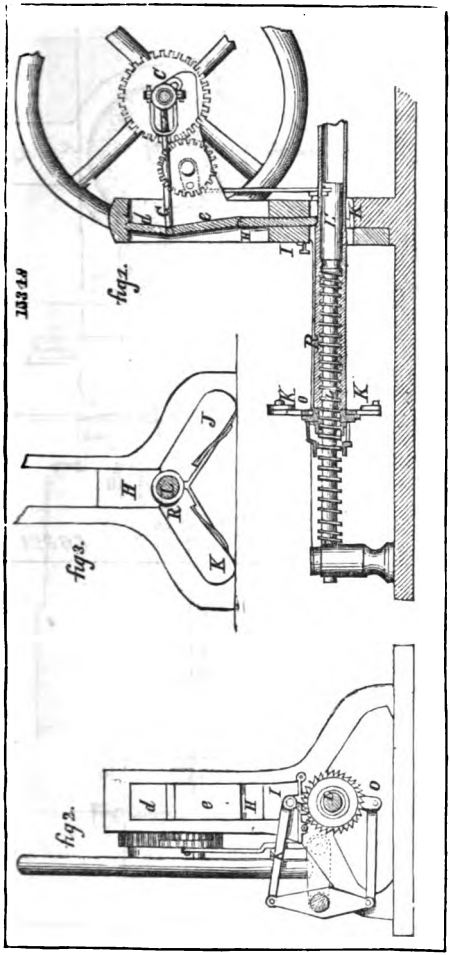

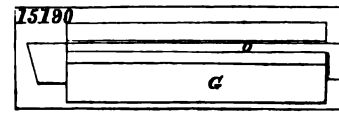

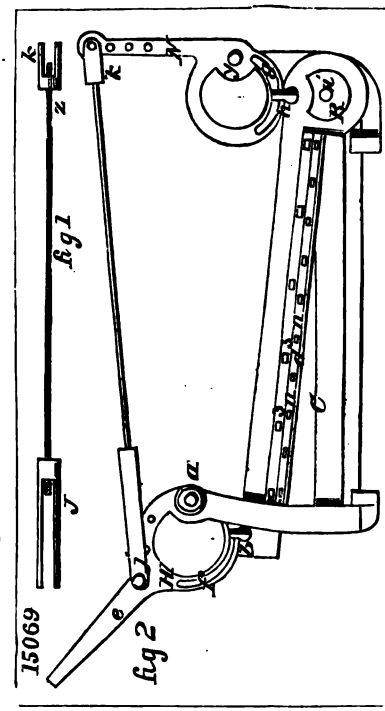

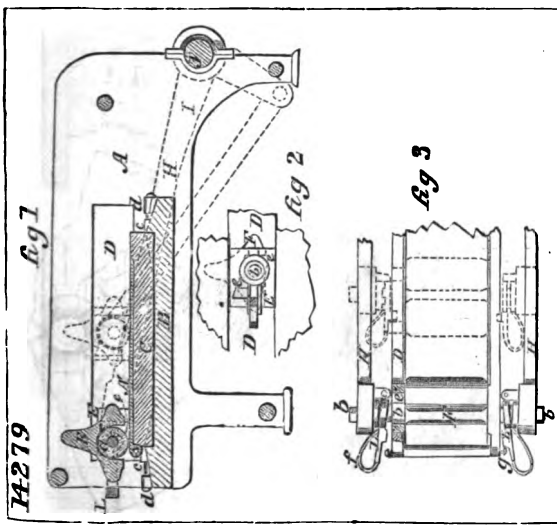

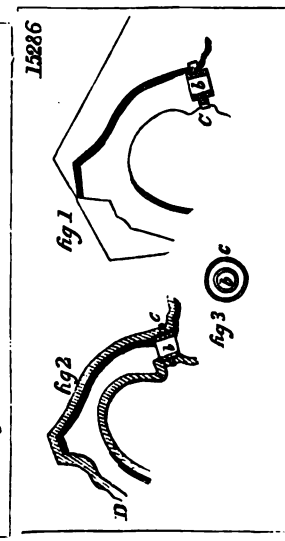

Digitized by Google

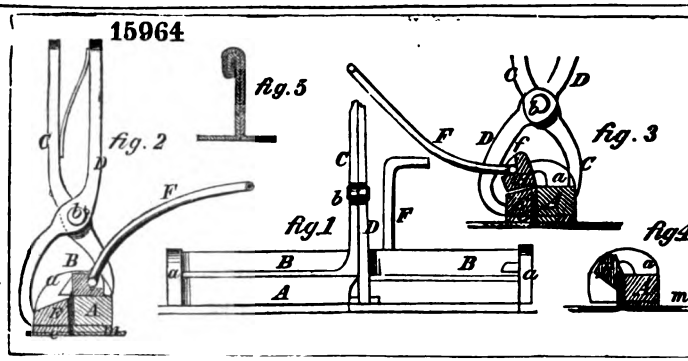

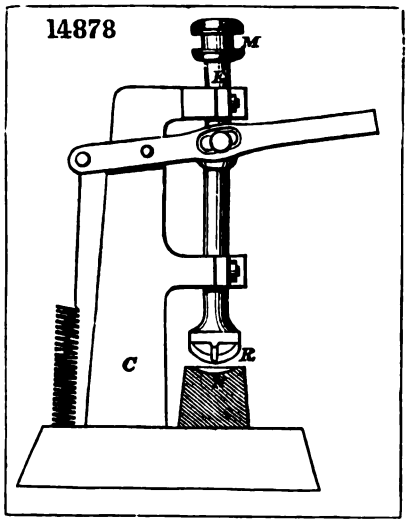

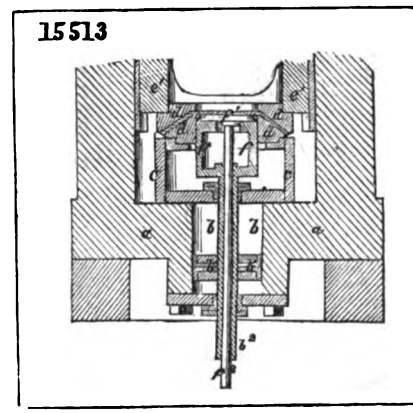

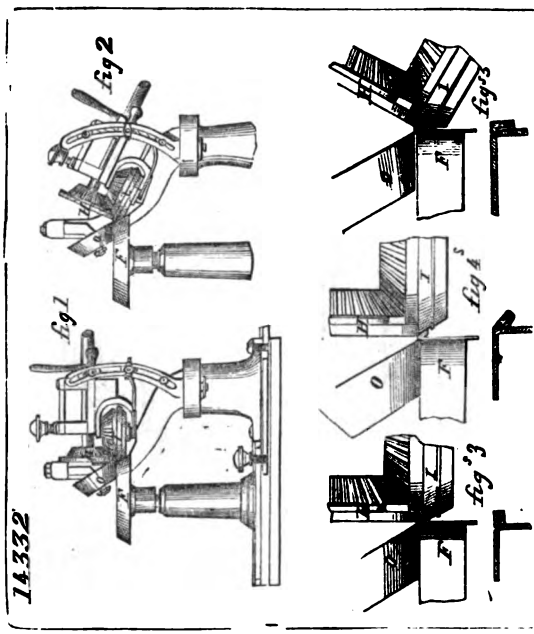

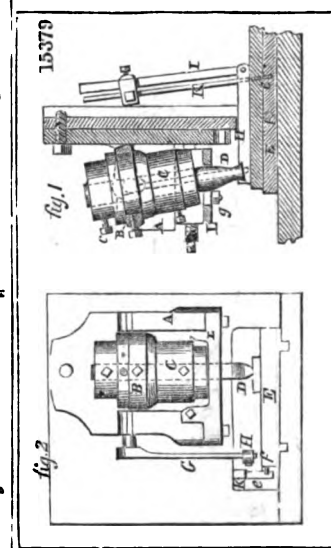

Digitized by Google

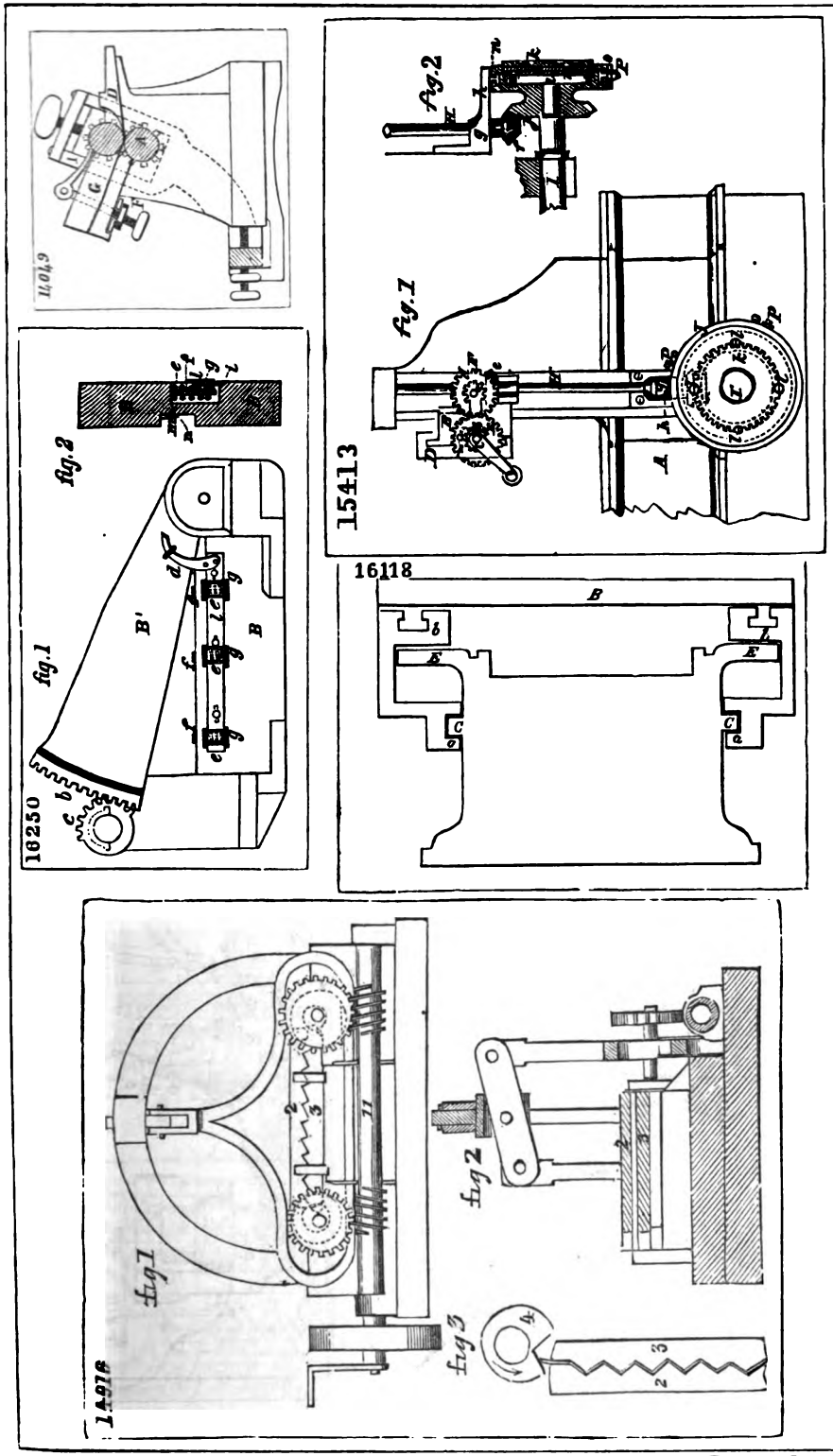

Digitized by Google

15964

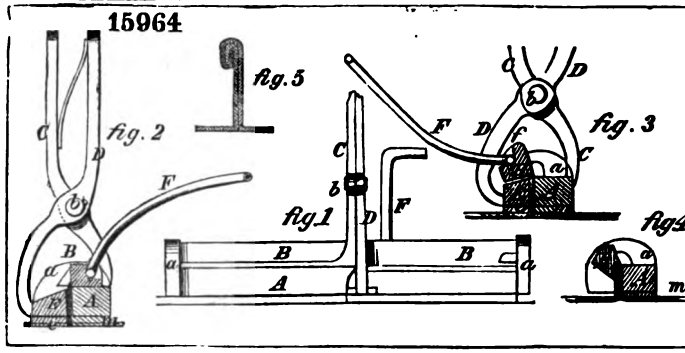

14878

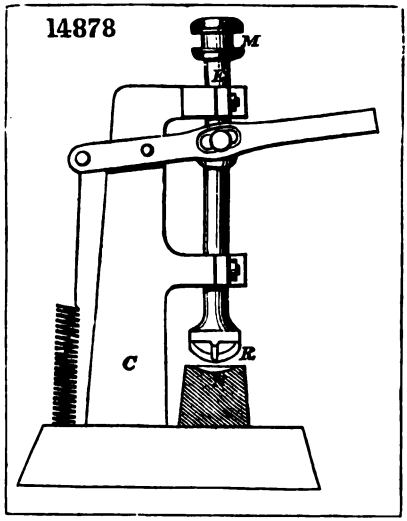

15513

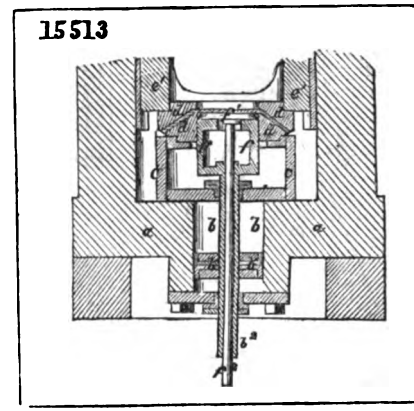

14332

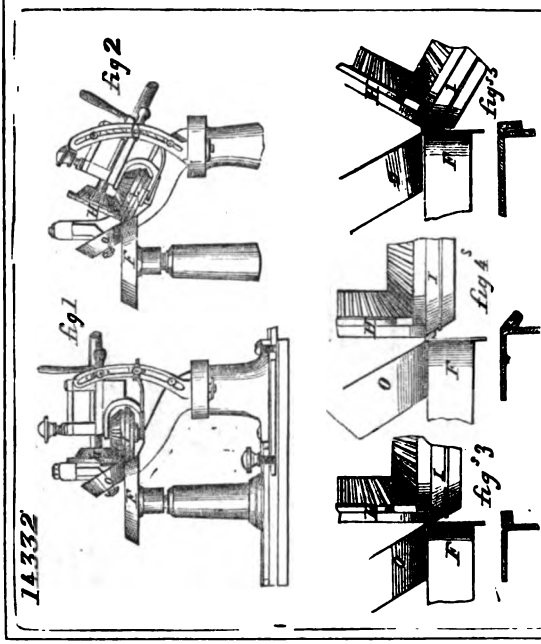

15379

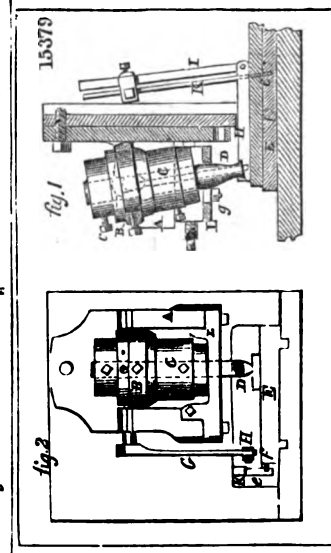

Digitized by Google

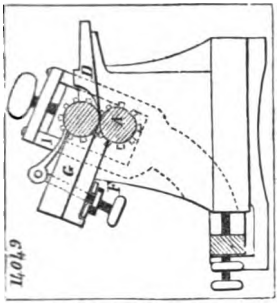

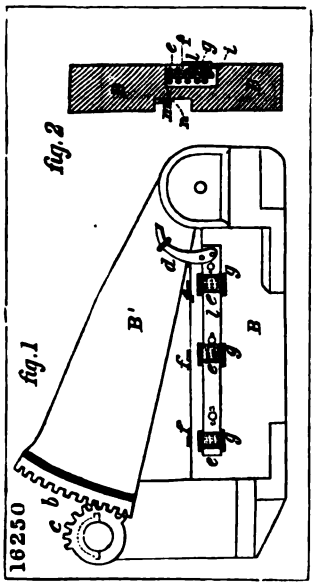

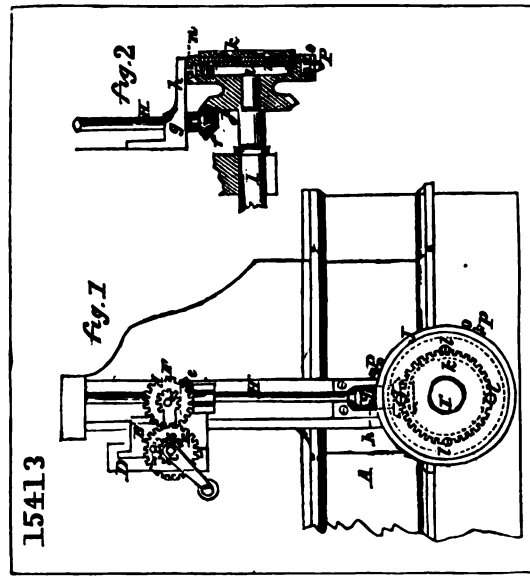

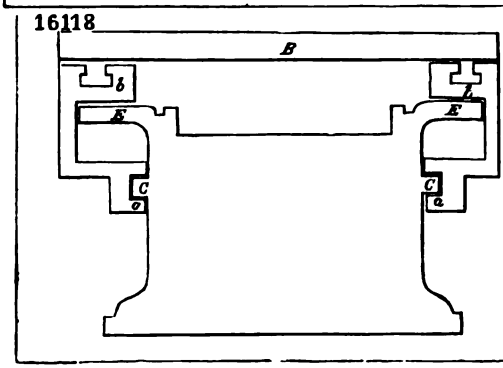

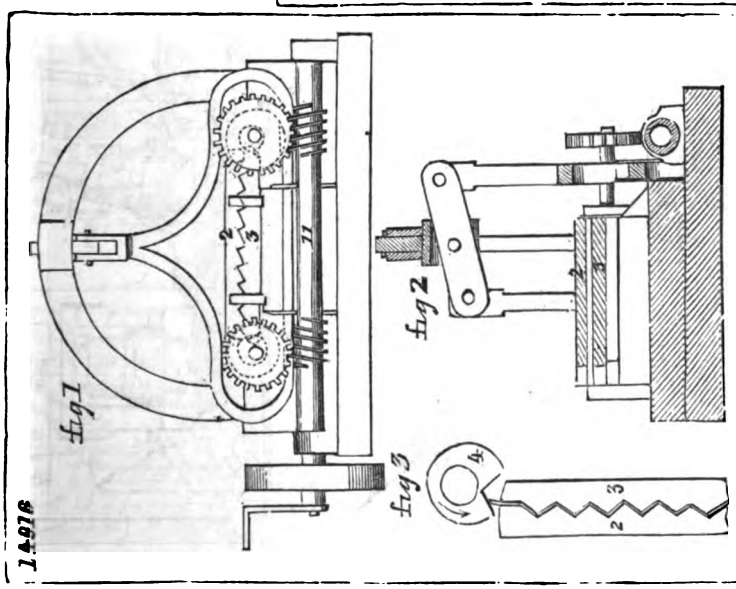

Digitized by Google

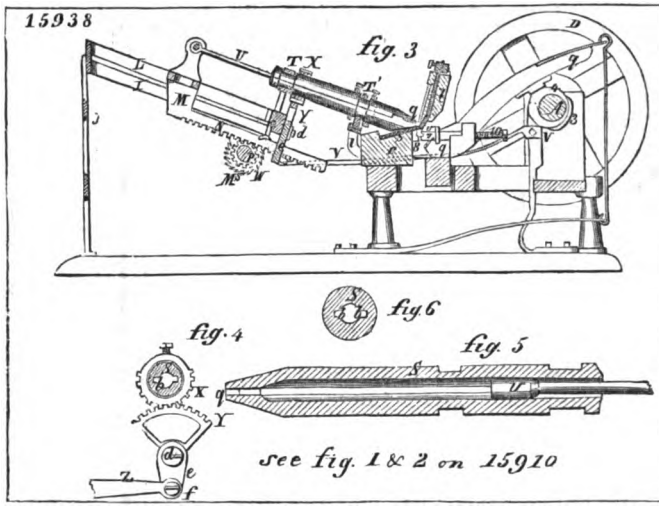

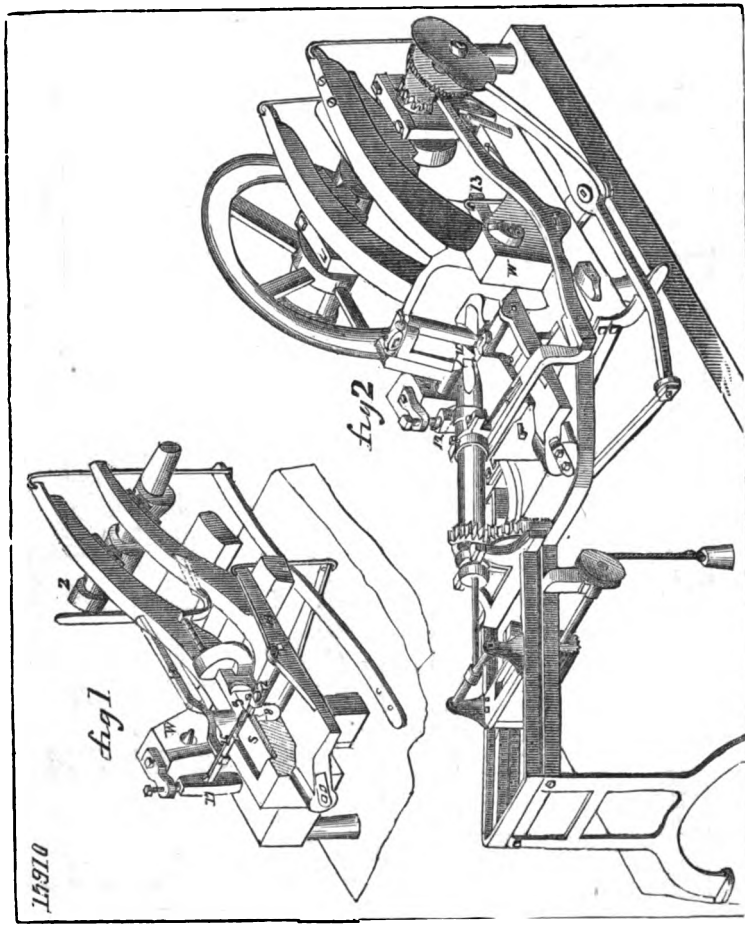

Digitized by Google

15861

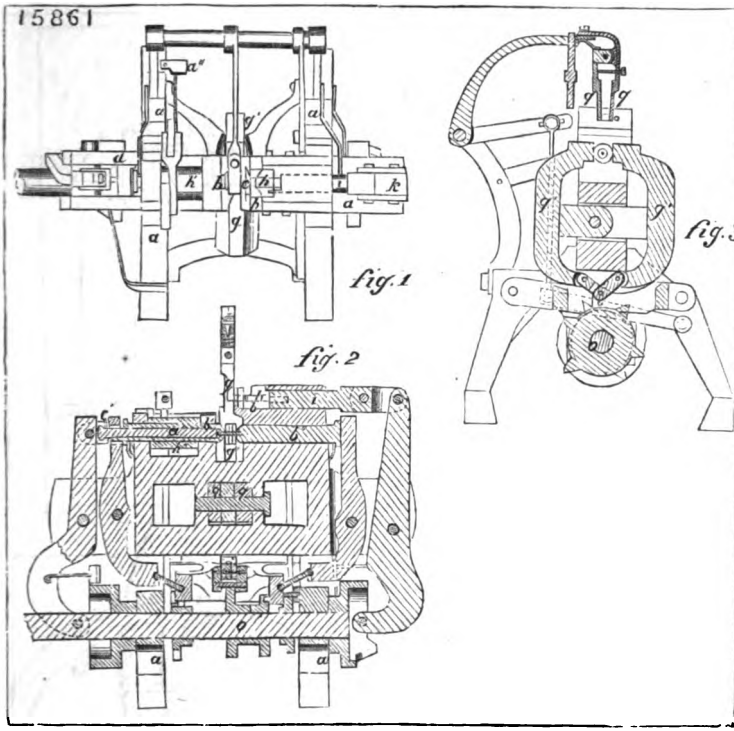

14452

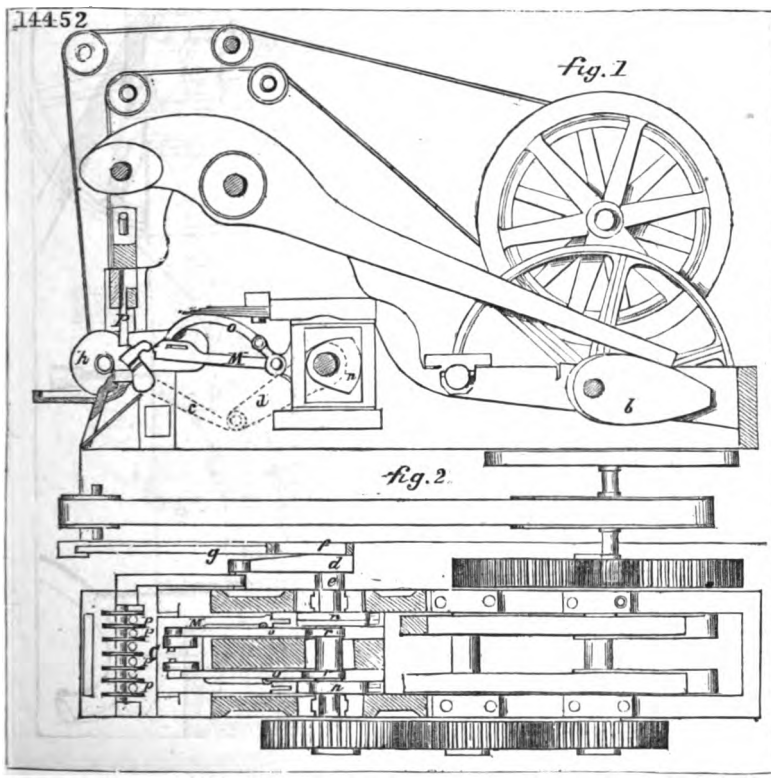

Digitized by Google

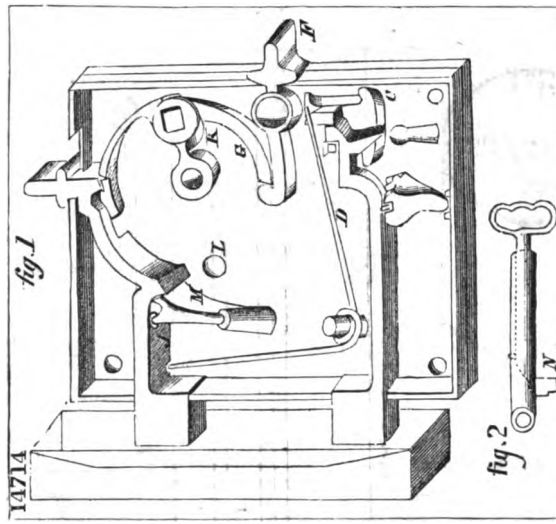

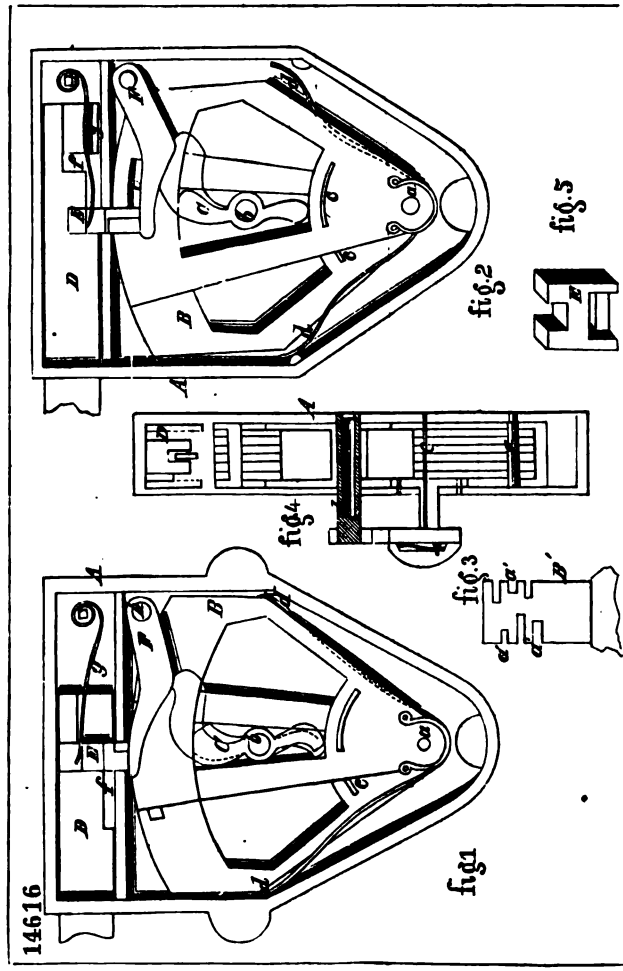

Digitized by Google

15124

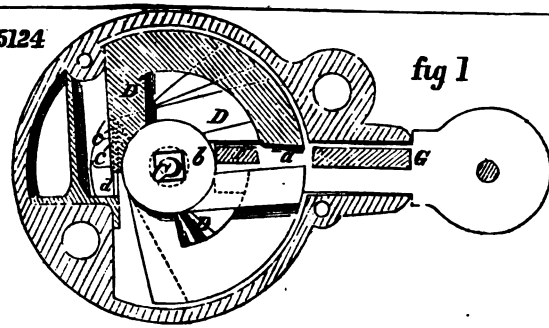

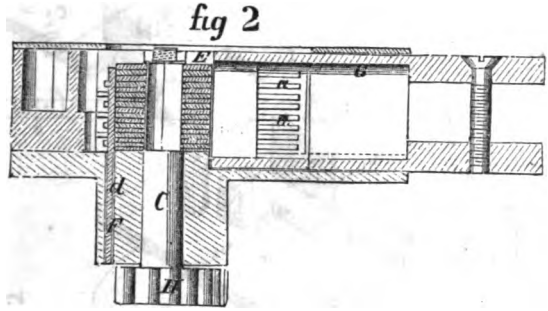

15489

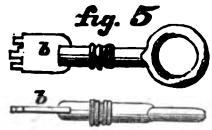

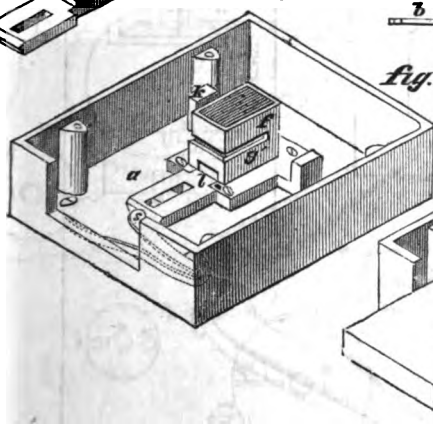

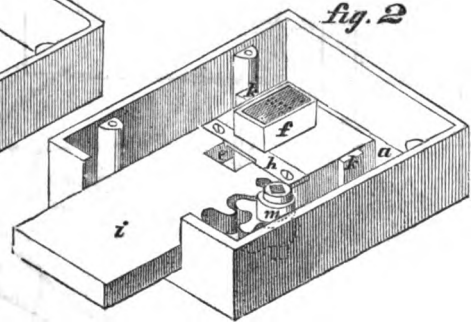

Digitized by Google

14896

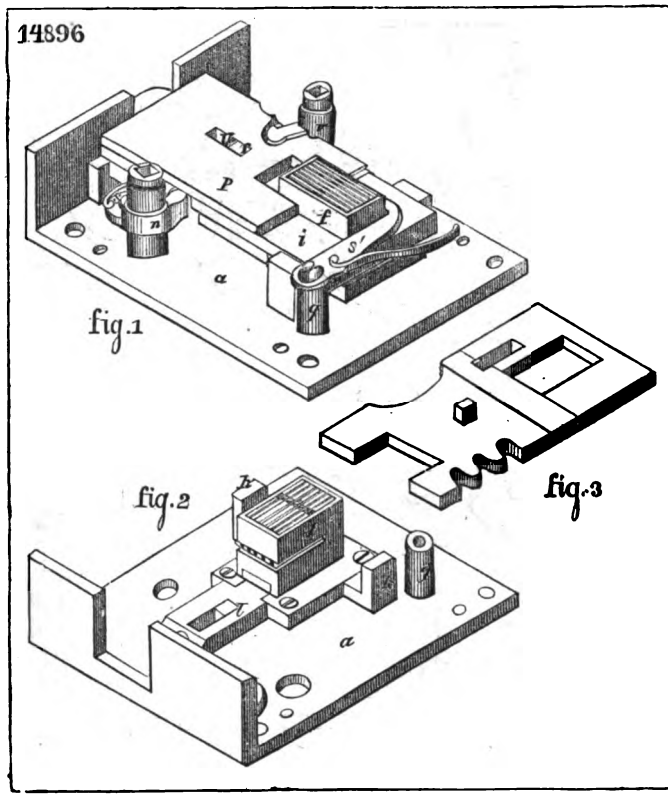

14846

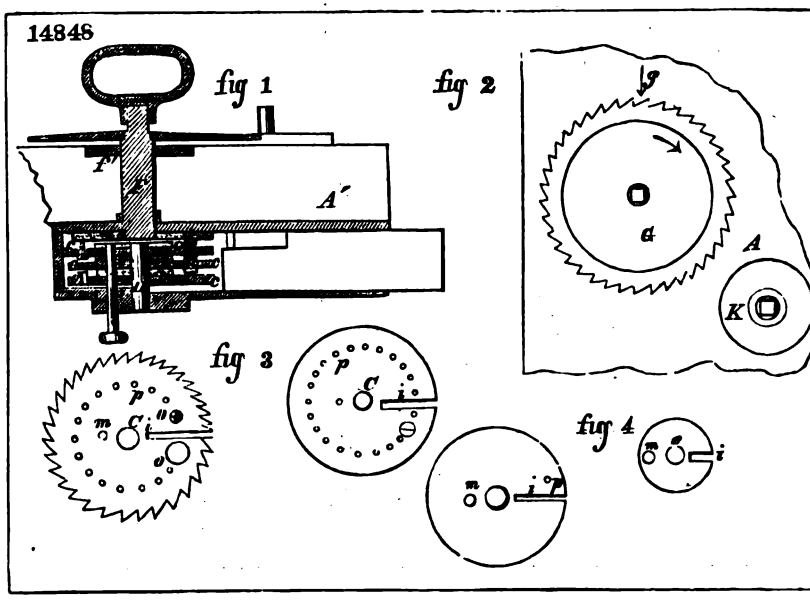

Digitized by Google

15962

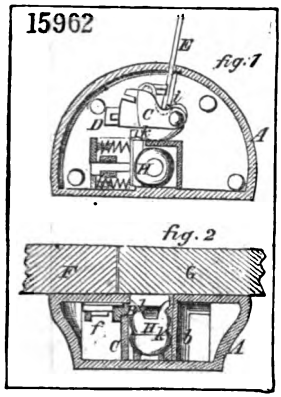

15589

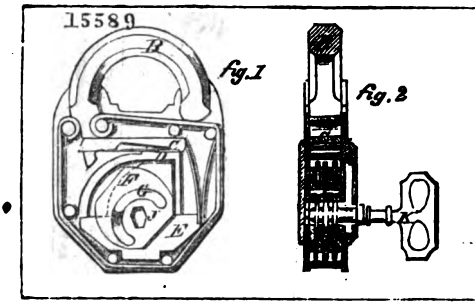

15239

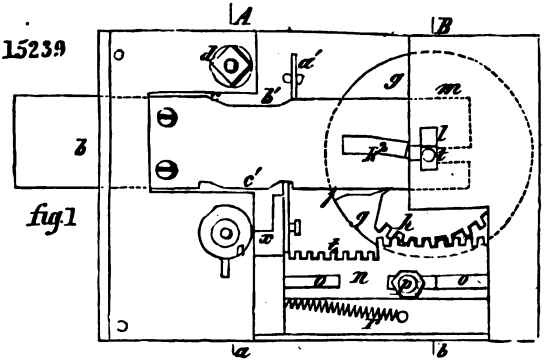

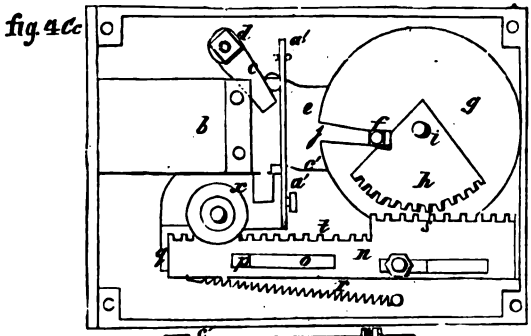

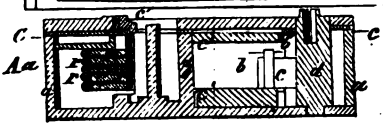

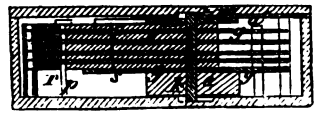

Digitized by Google

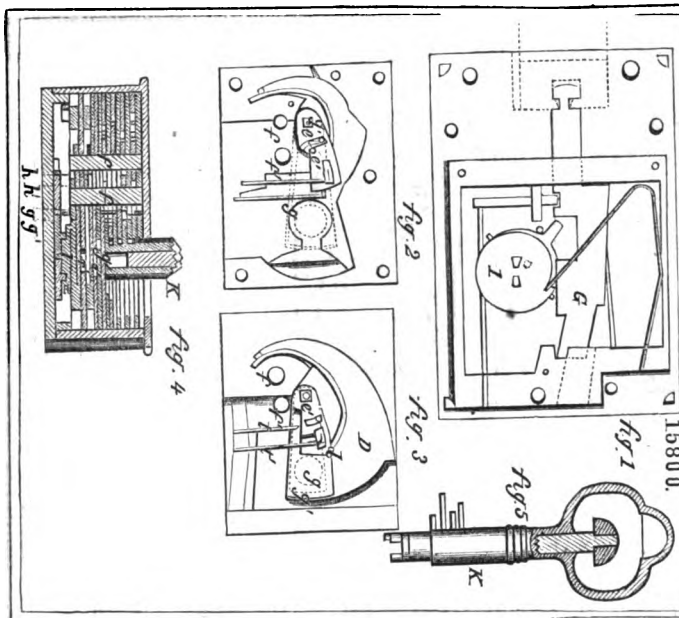

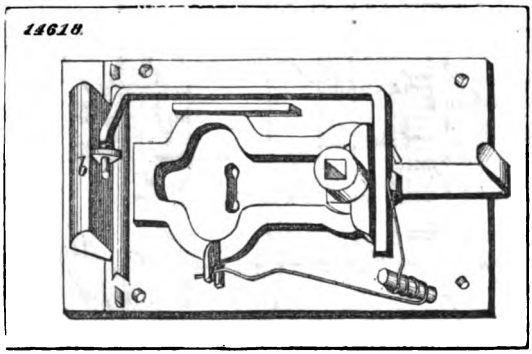

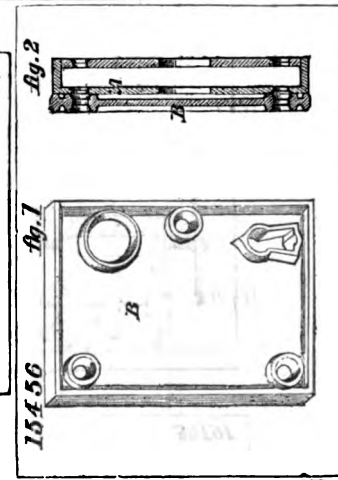

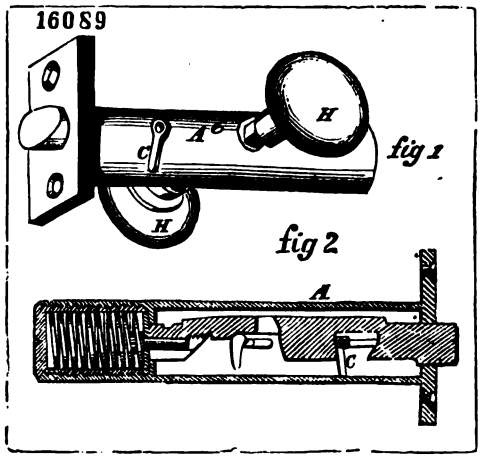

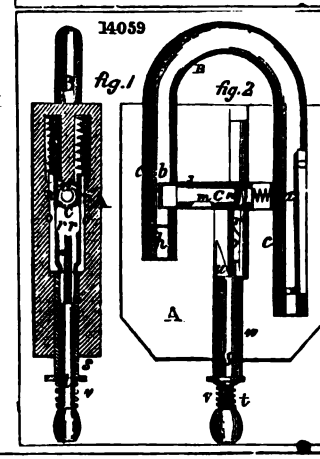

Digitized by Google

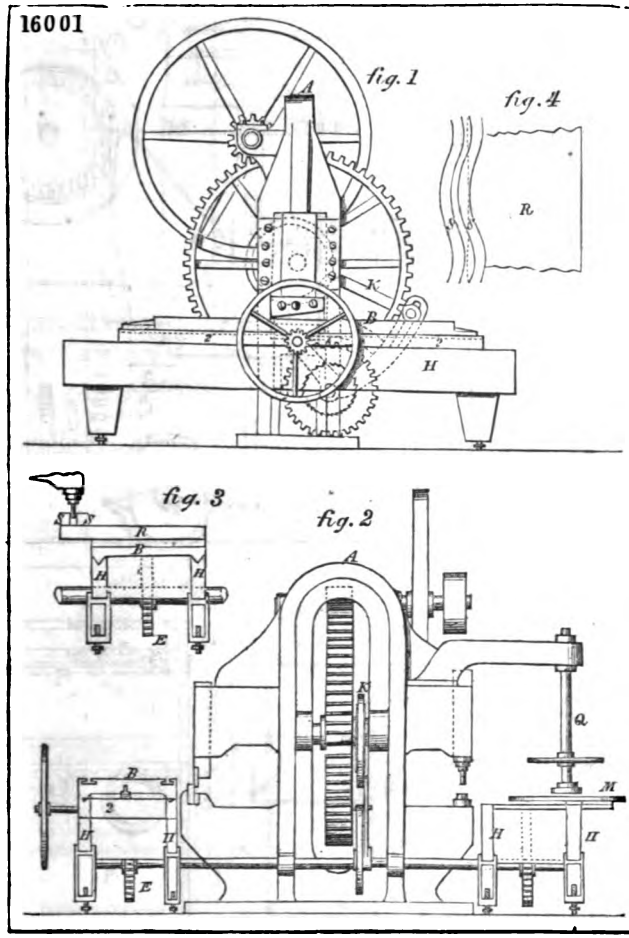

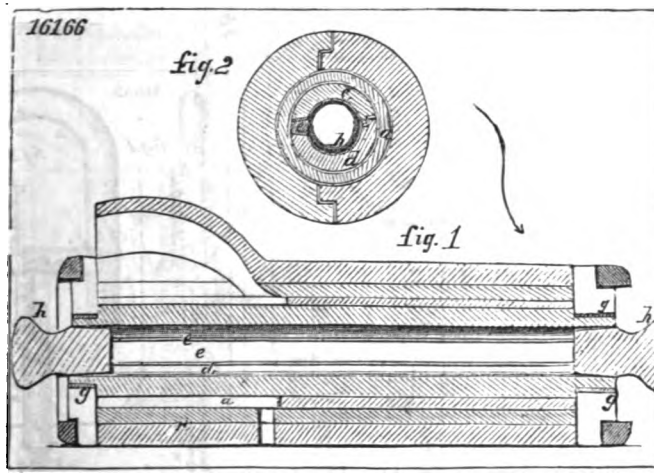

Digitized by Google

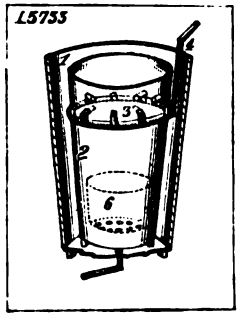

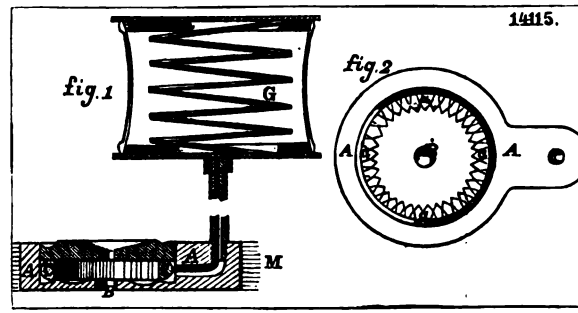

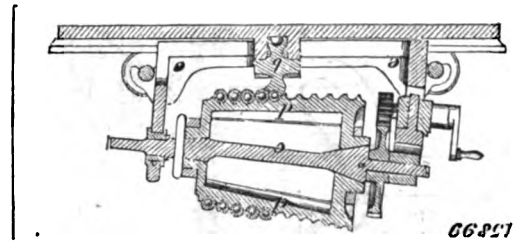

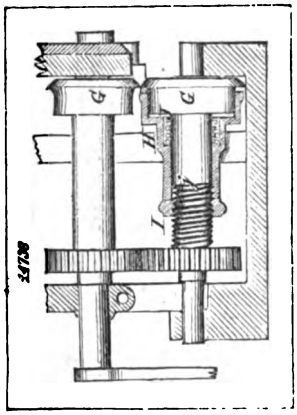

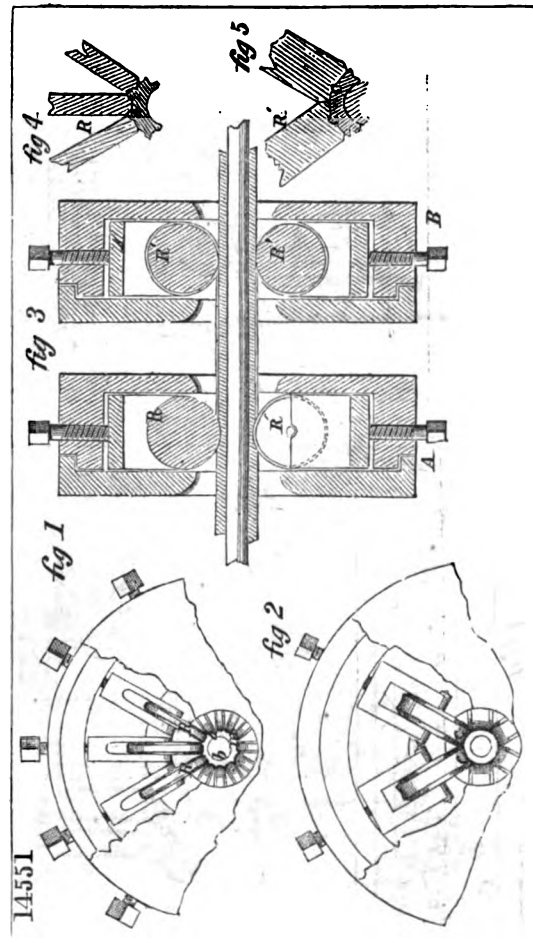

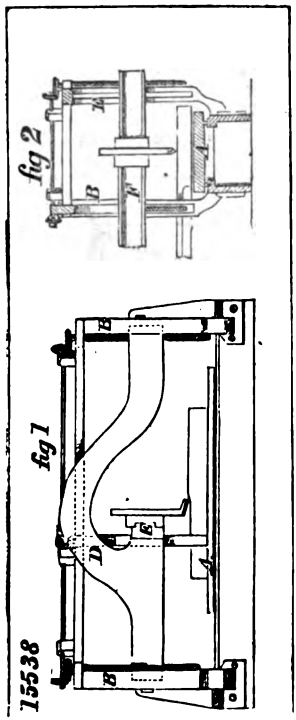

Digitized by Google

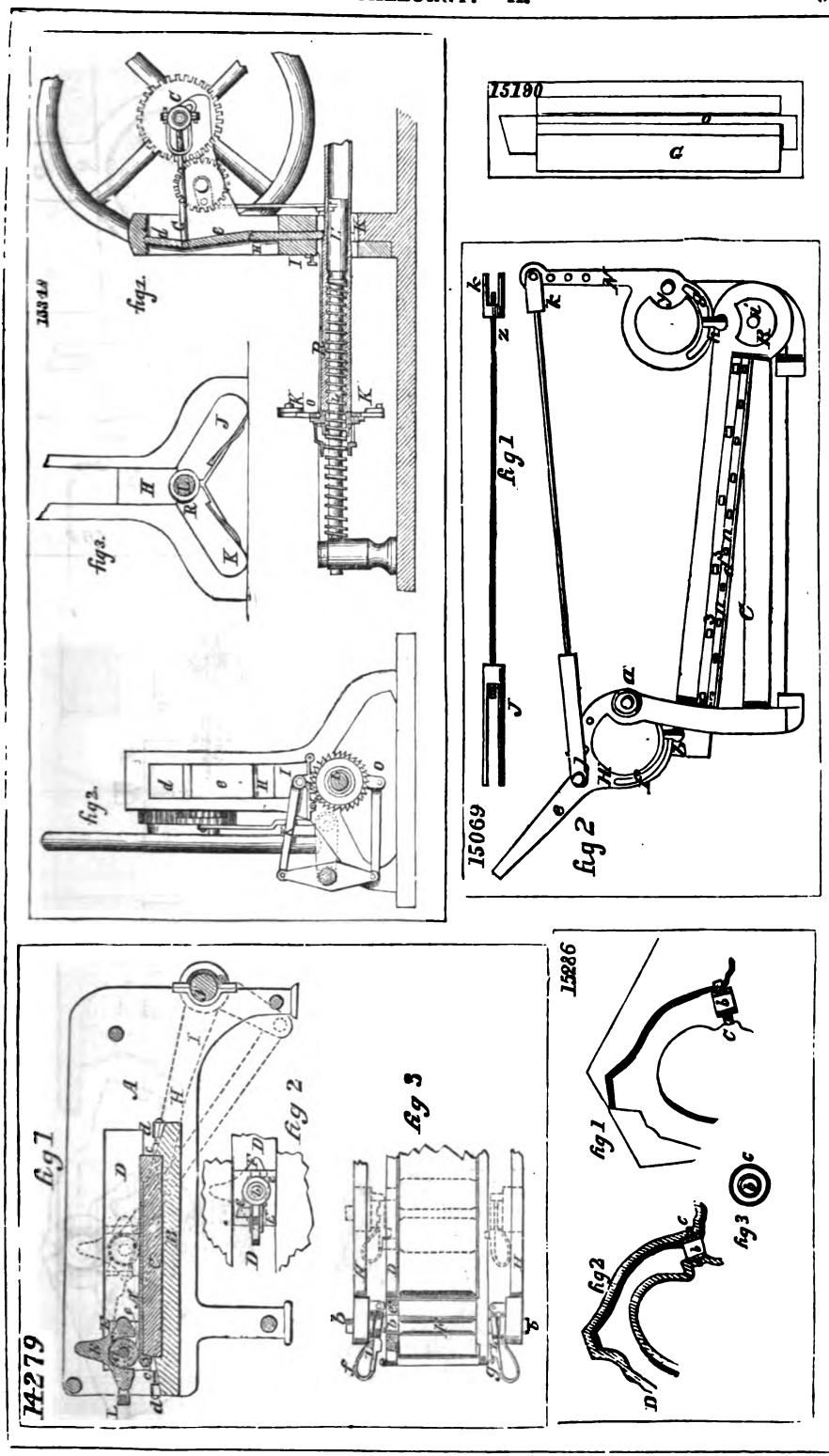

Digitized by Google

15964

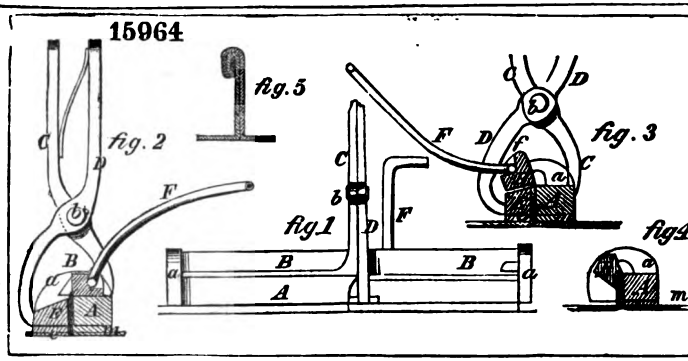

14878

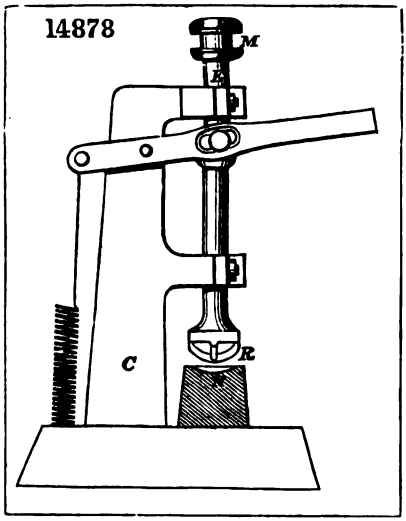

15513

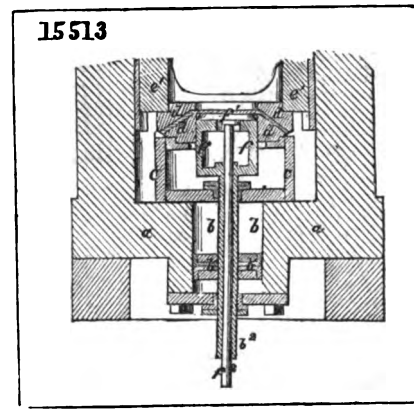

14332

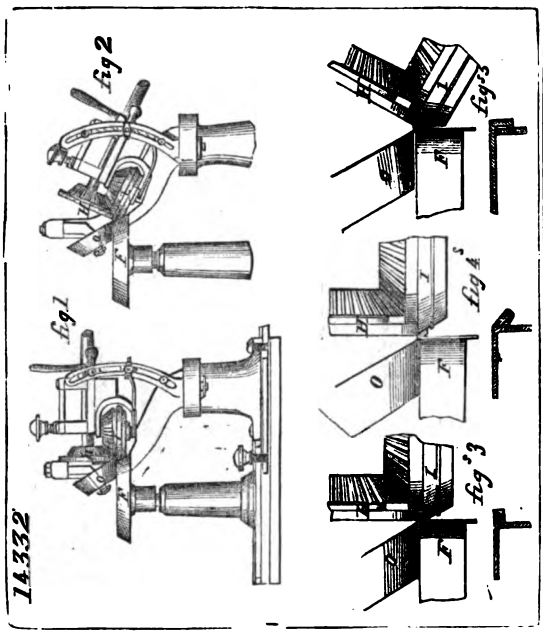

15379

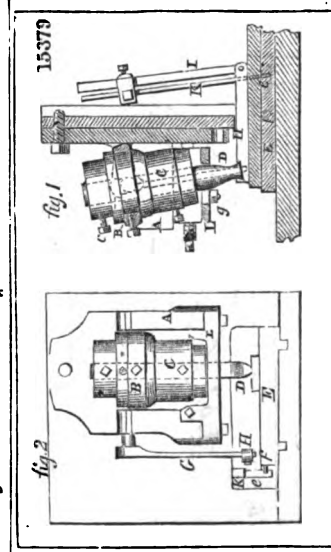

Digitized by Google

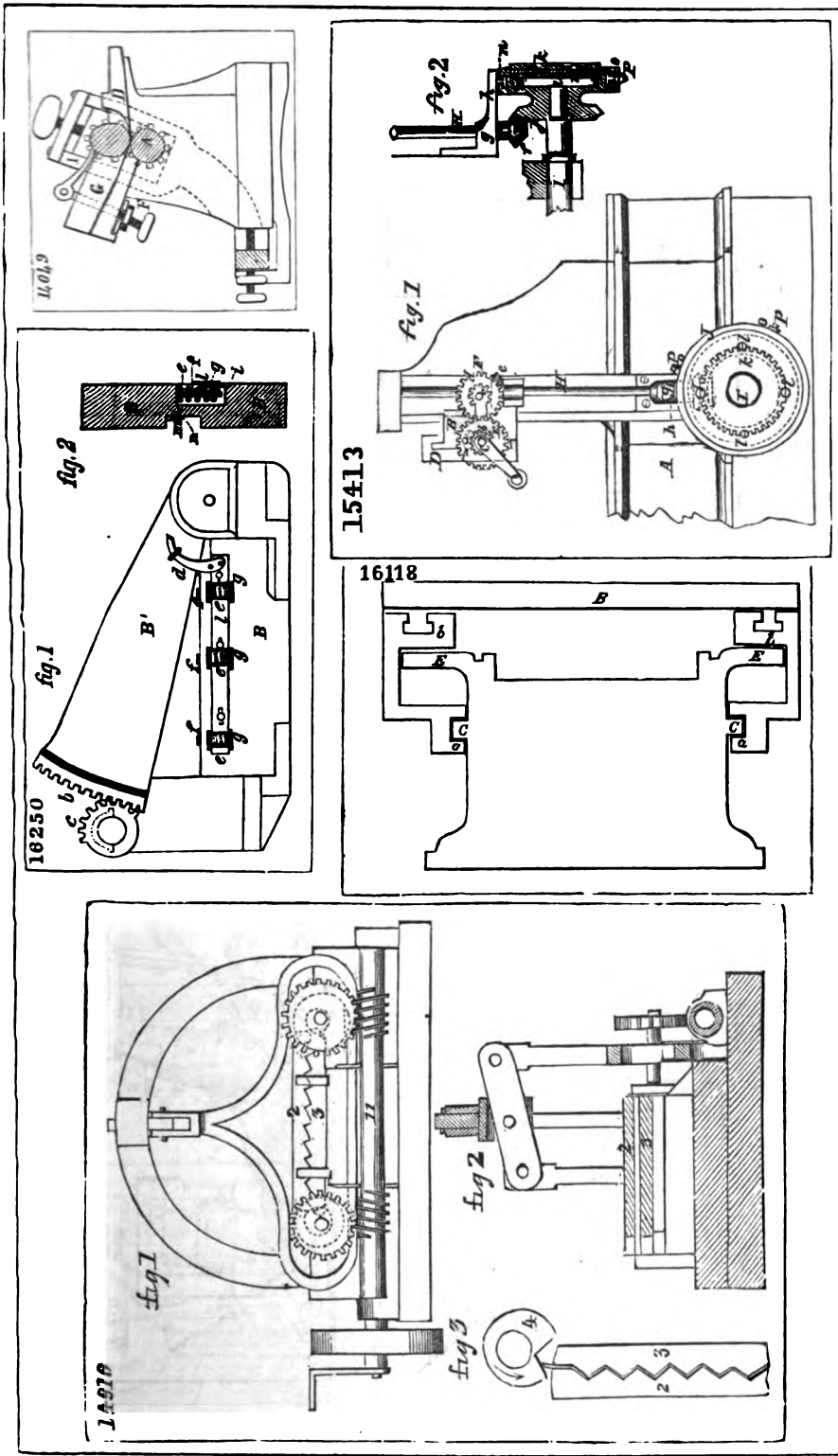

Digitized by Google

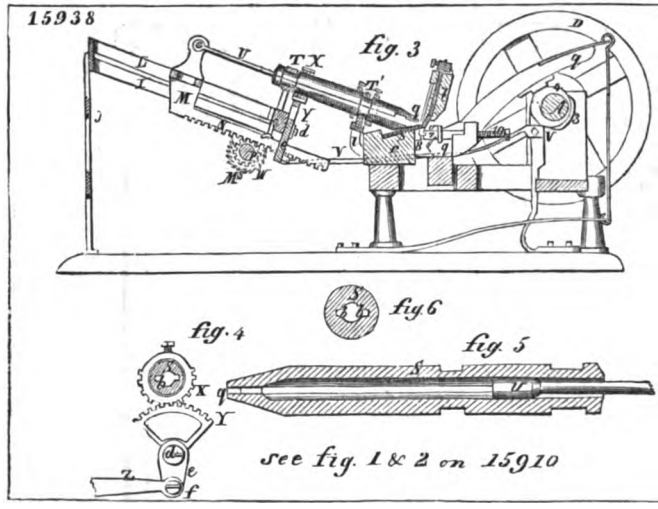

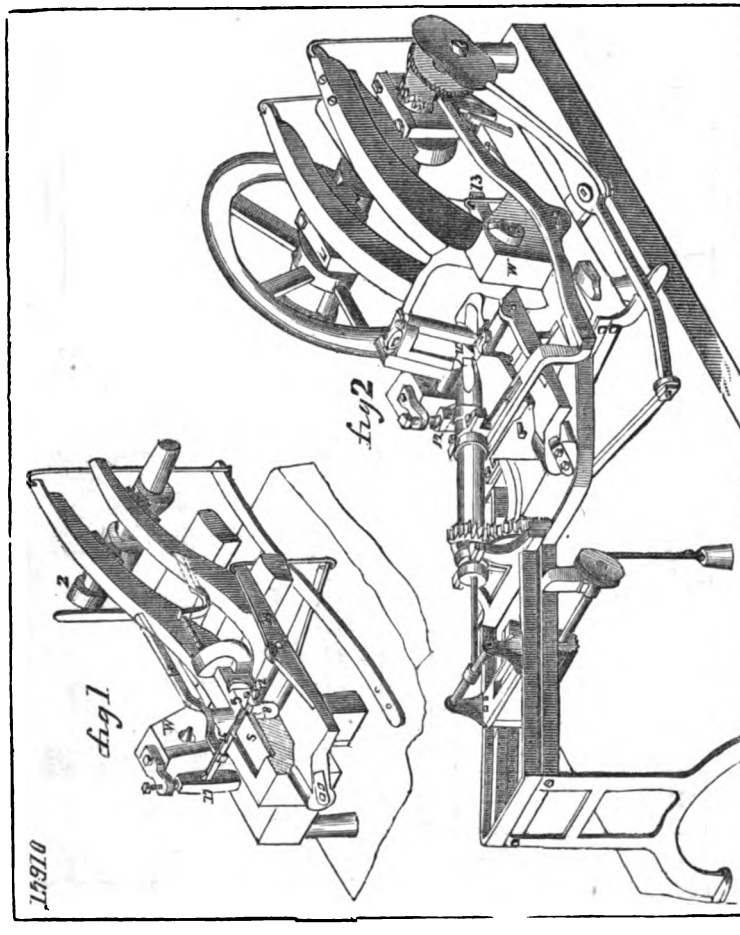

Digitized by Google

15861

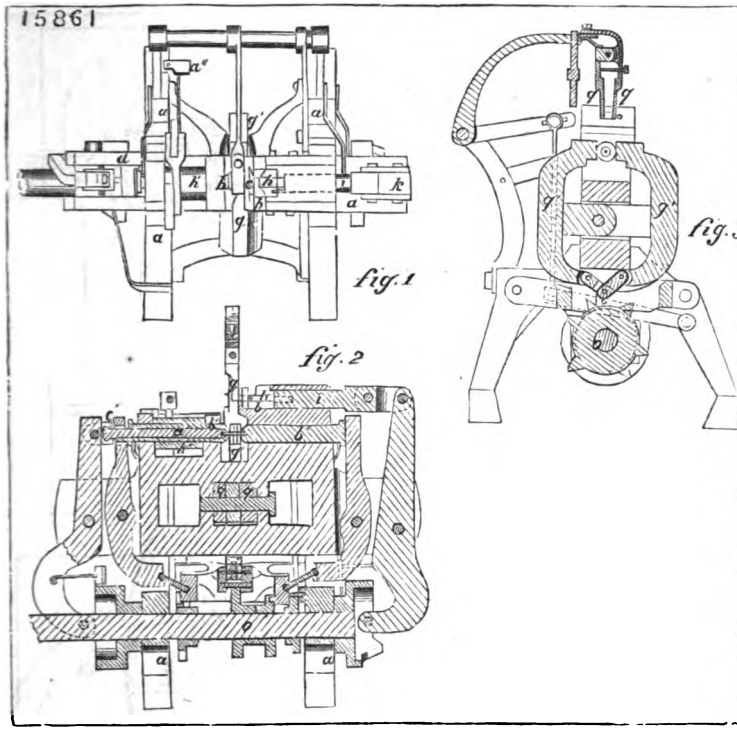

14452

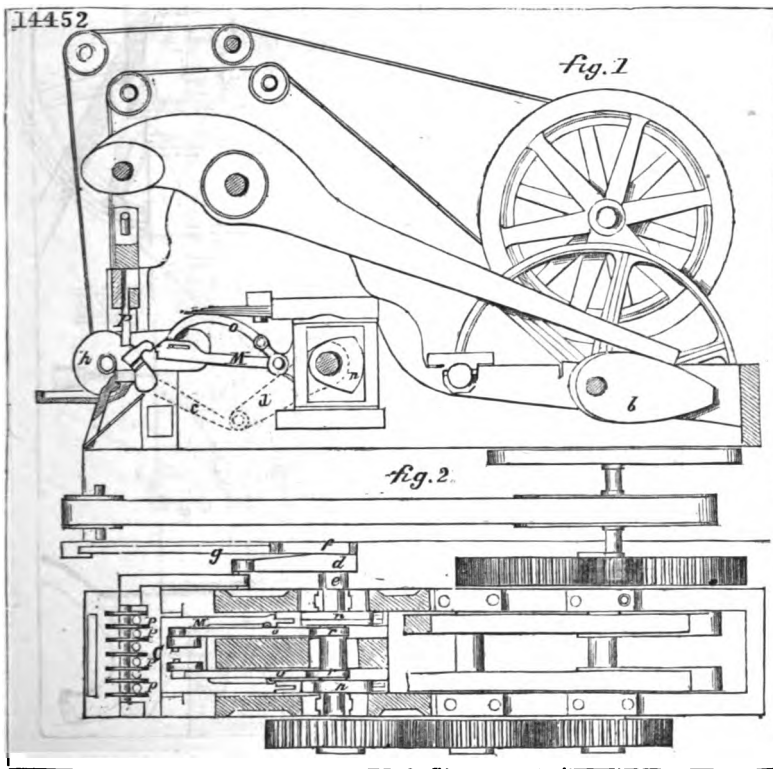

Digitized by Google

16142

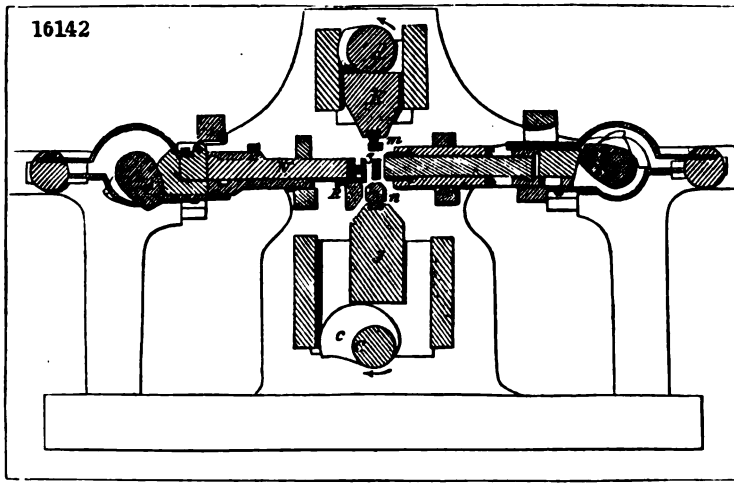

15003

fig1.

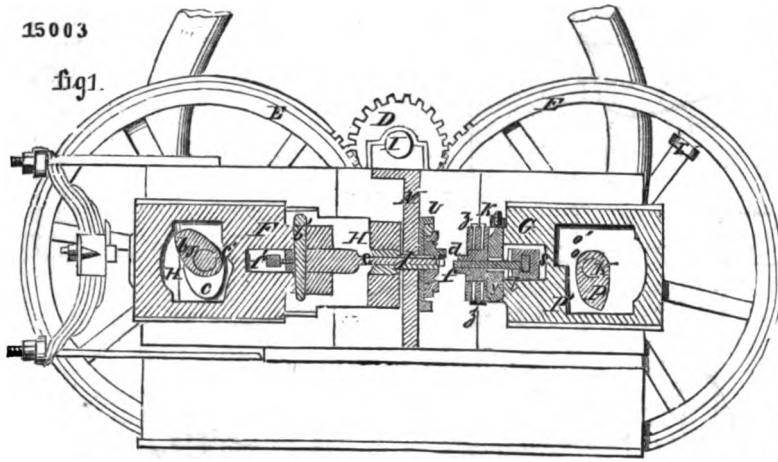

fig2

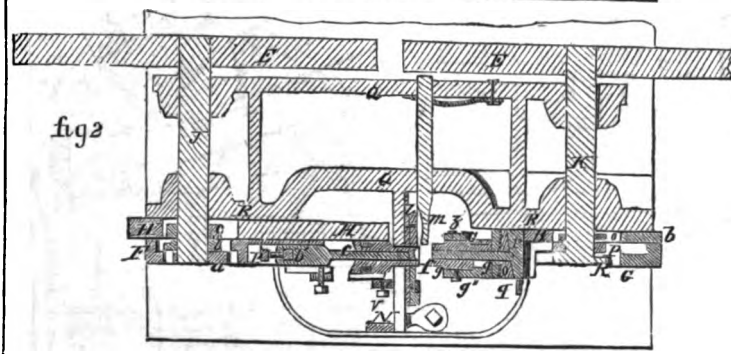

fig3

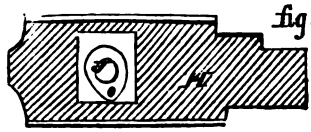

fig4

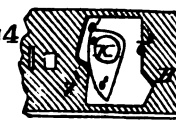

Digitized by Google

16039

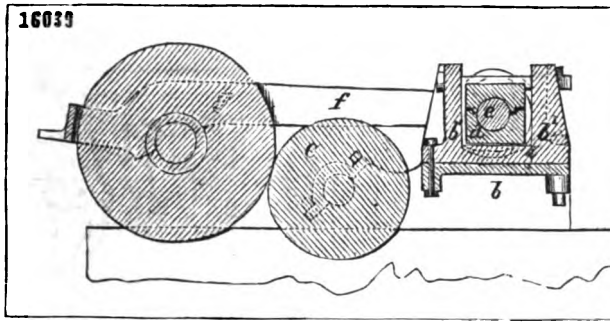

15515

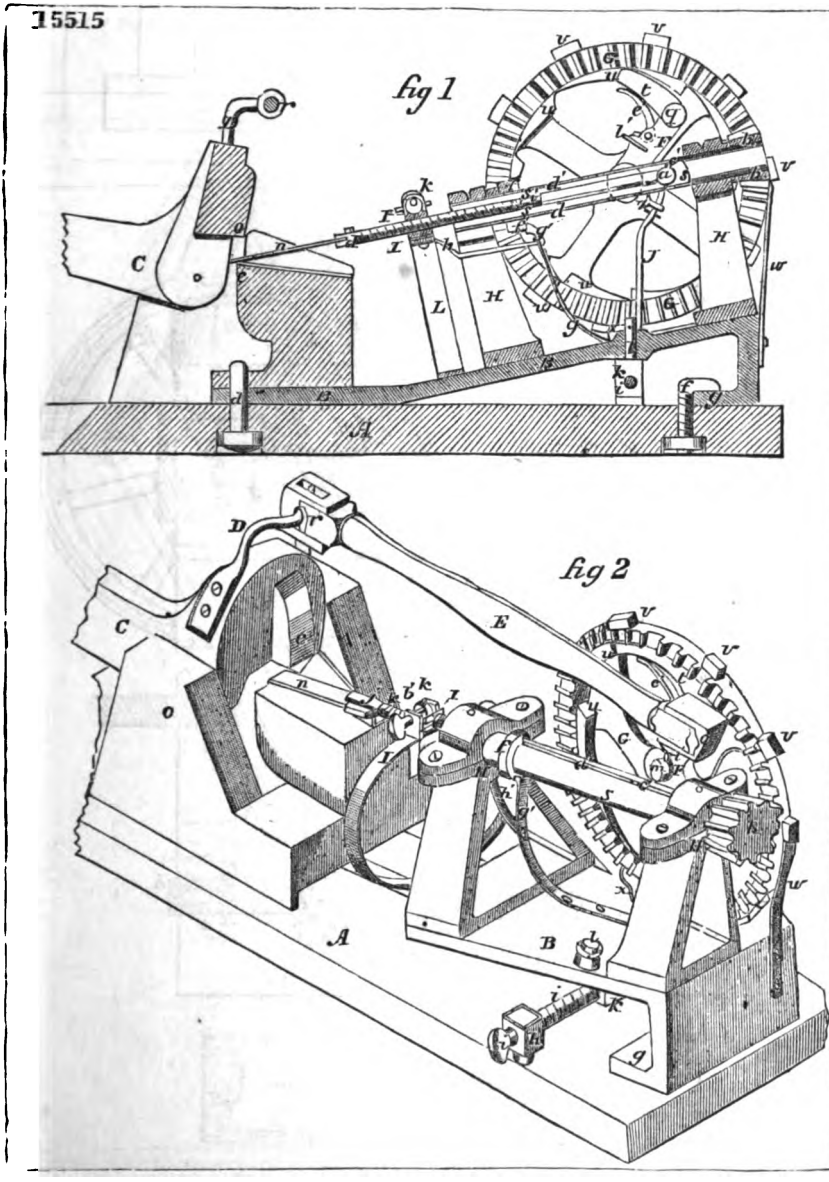

Digitized by Google

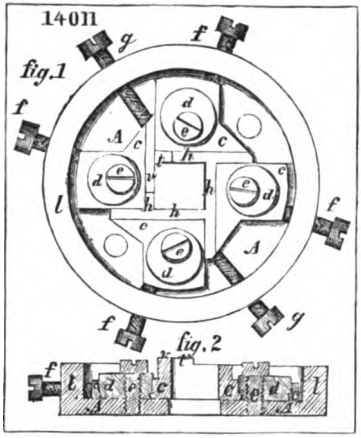
14011
fig.1
fig.2

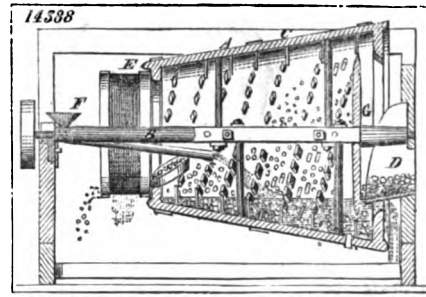
14538

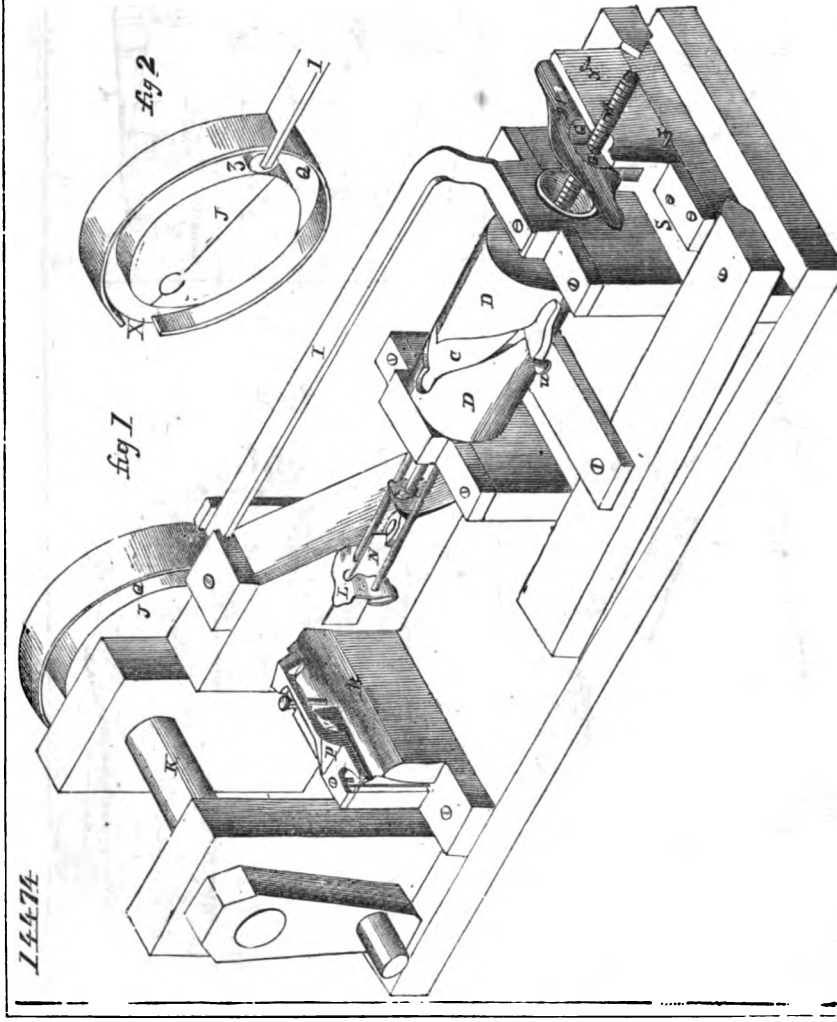
fig 1
fig 2

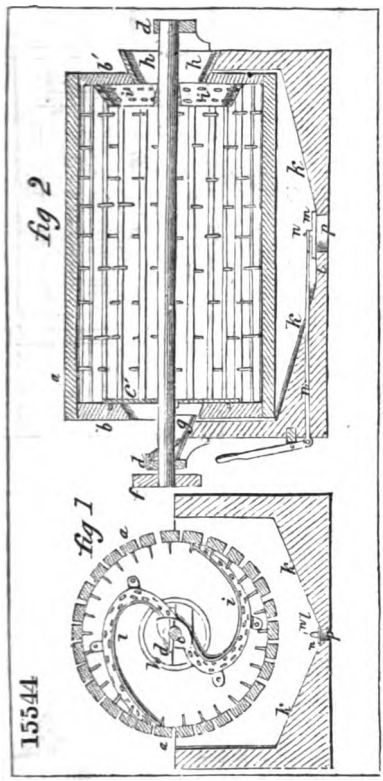

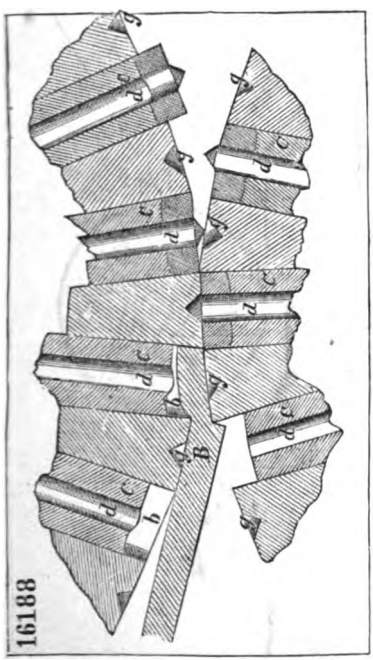

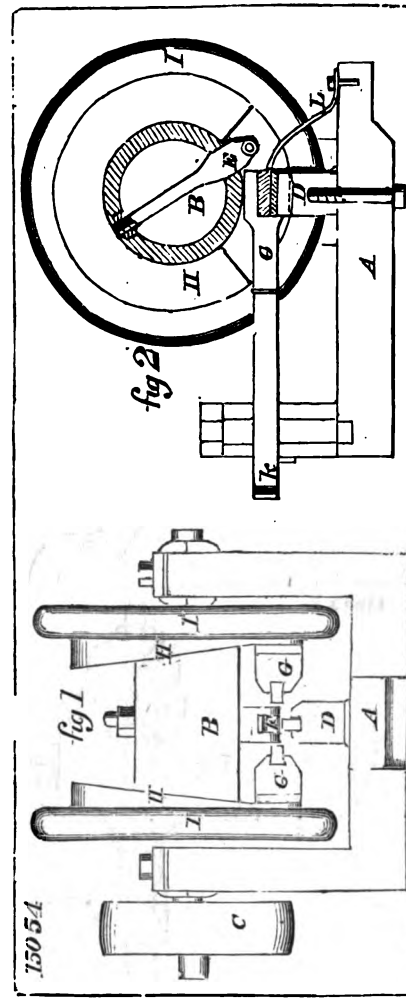

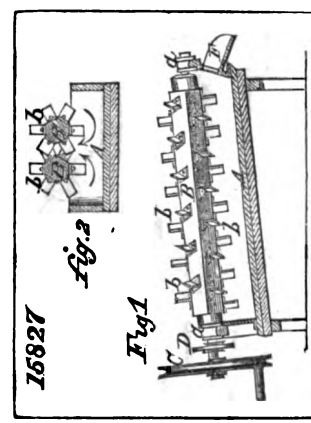

Digitized by Google

15871

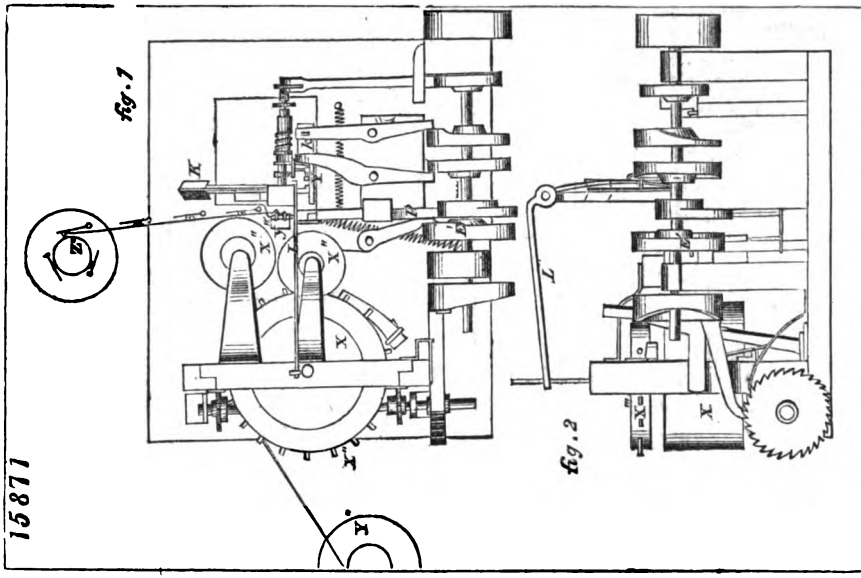

15004

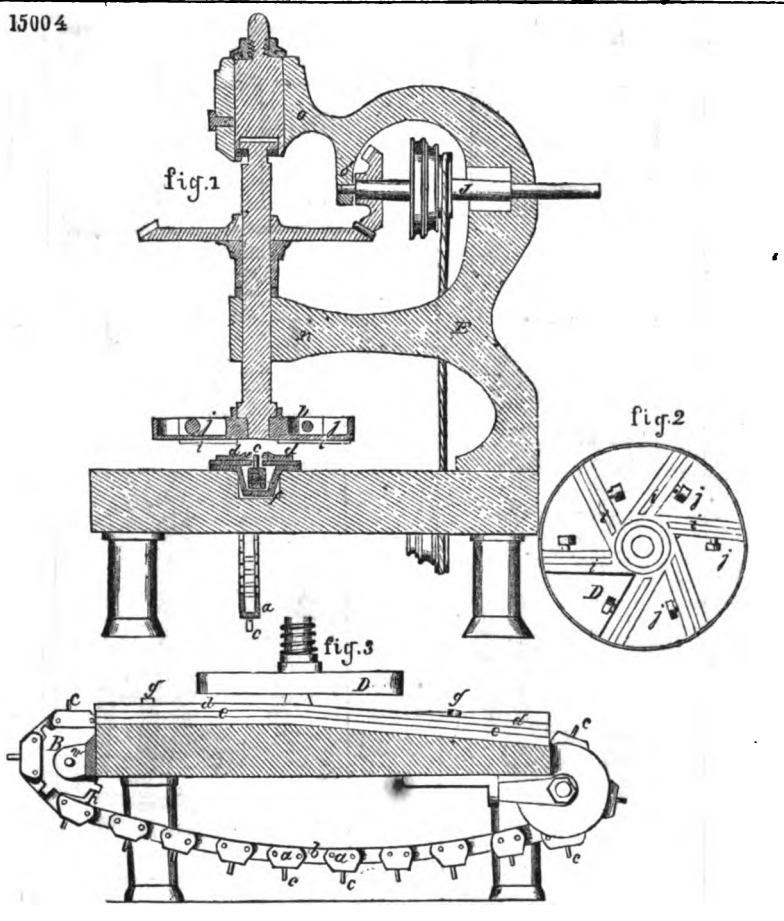

Digitized by Google

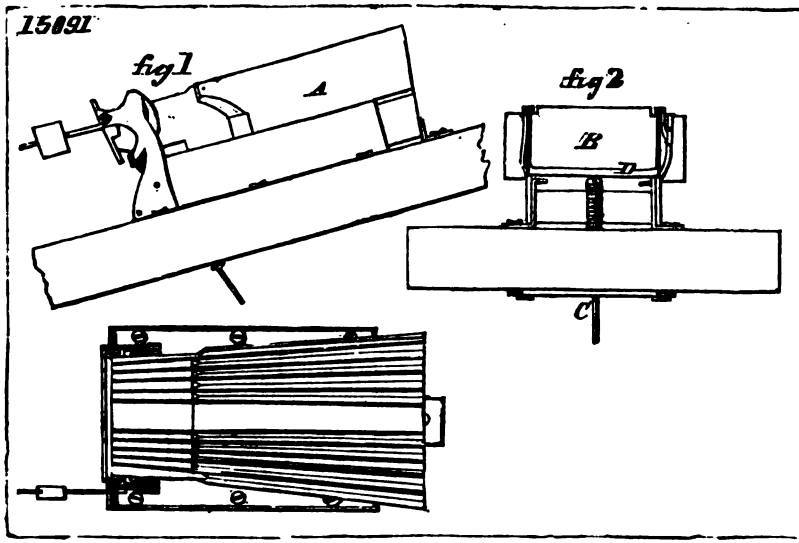

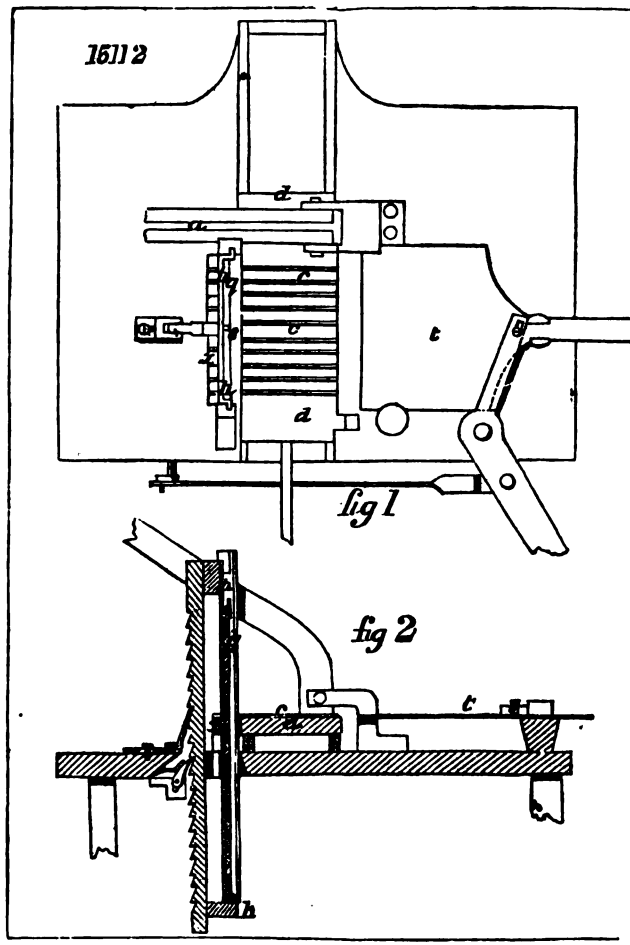

Digitized by Google

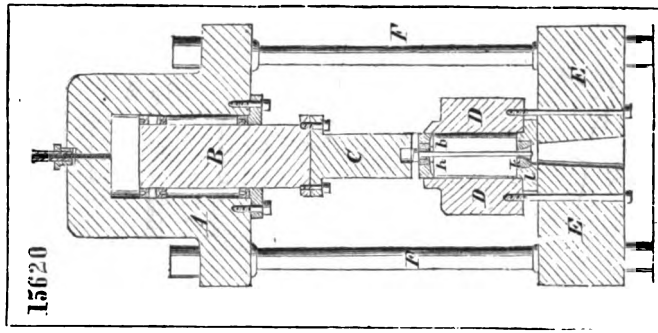

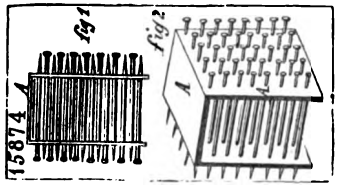

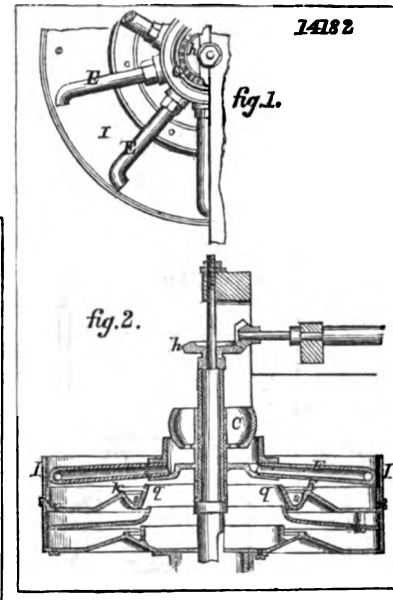

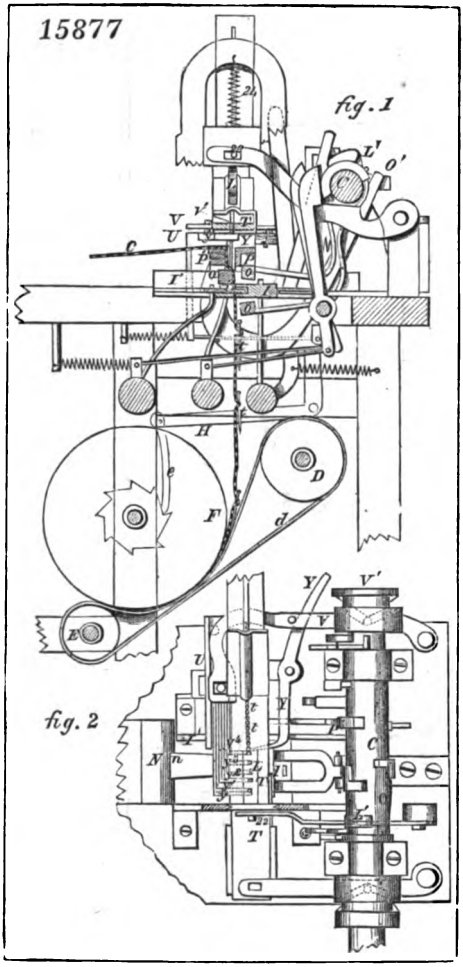

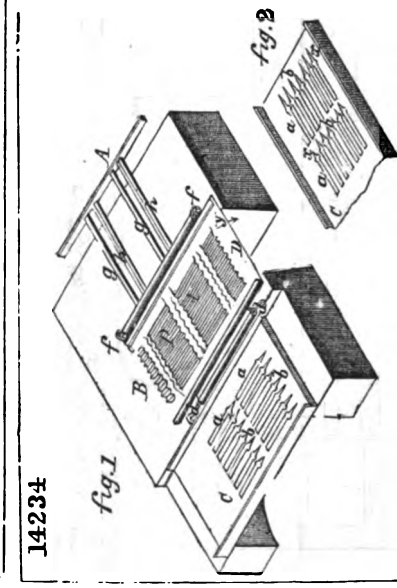

Digitized by Google

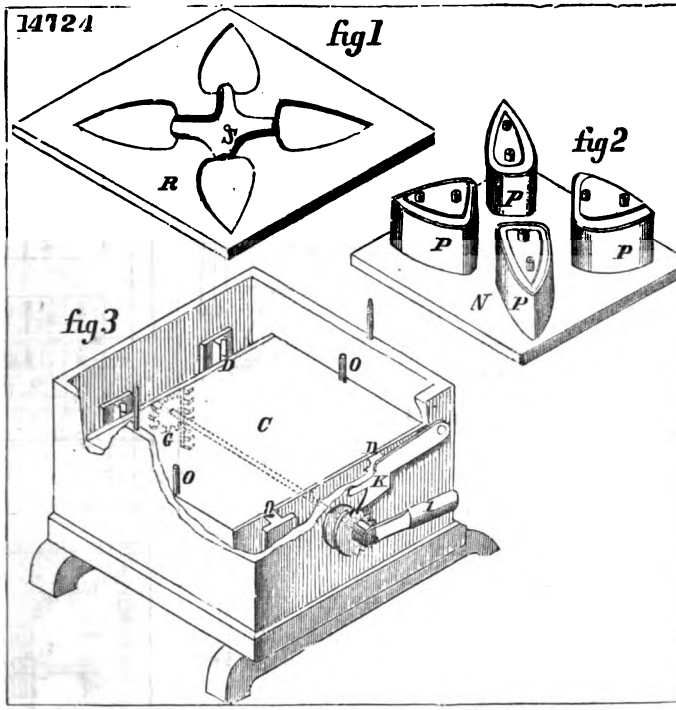

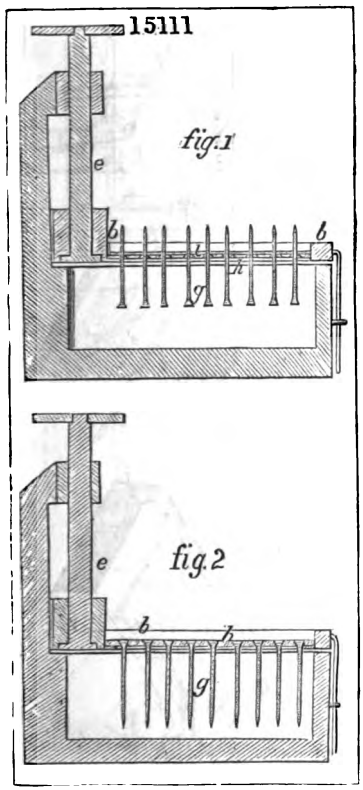

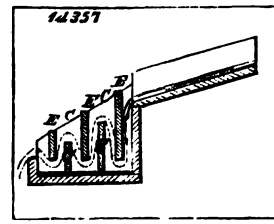

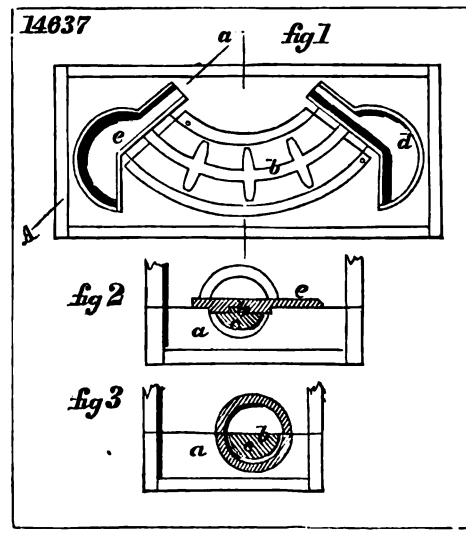

Digitized by Google

15860

fig 1

fig 2

fig 3

14866

16087

14701

fig 1

fig 2

14242

fig. 2

fig. 1

Digitized by Google

14807

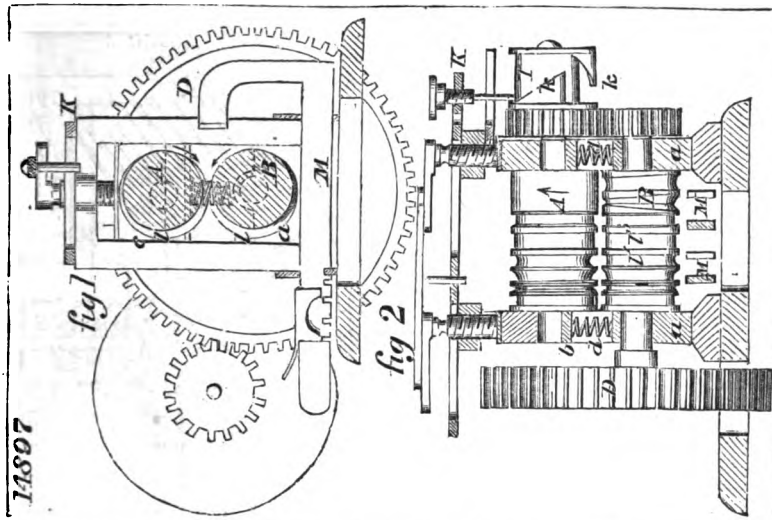

14600

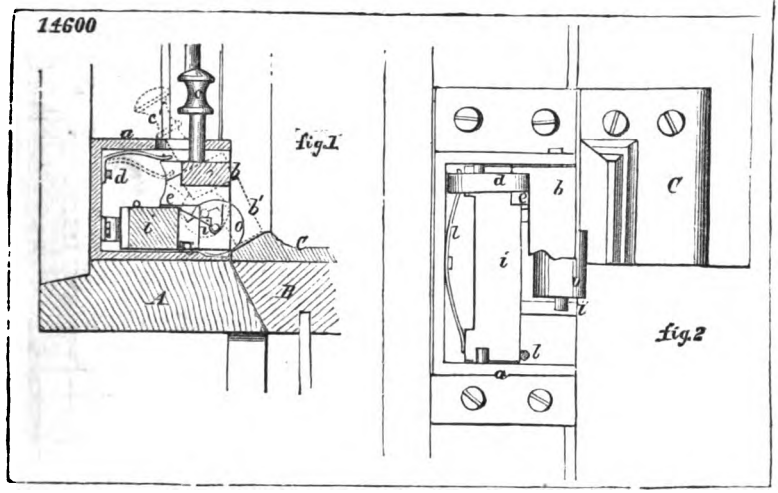

14166

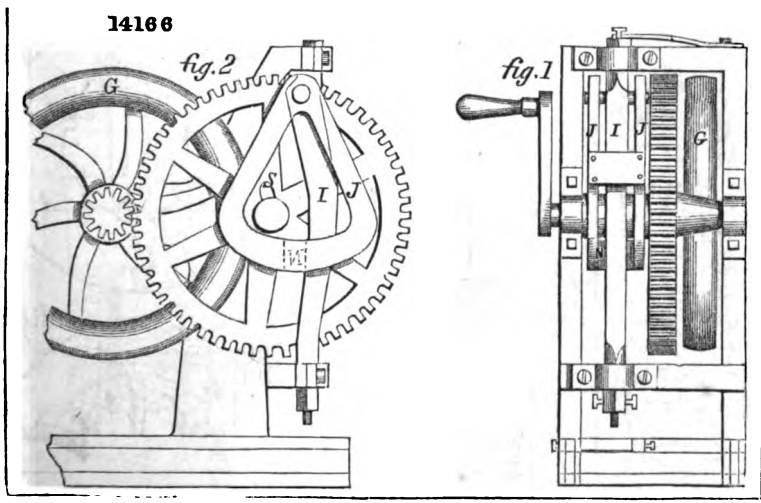

Digitized by Google

15523

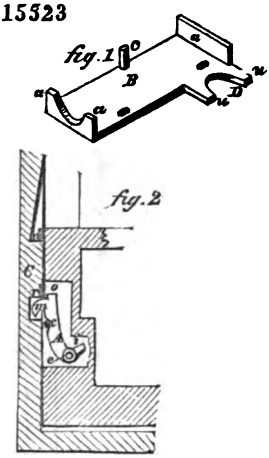

15404

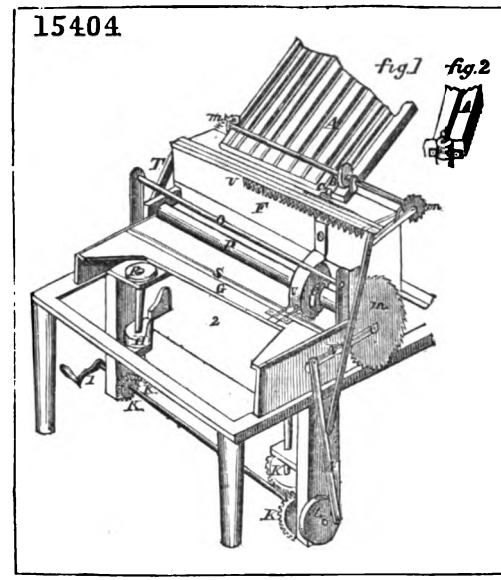

15939

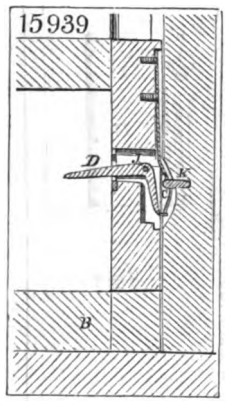

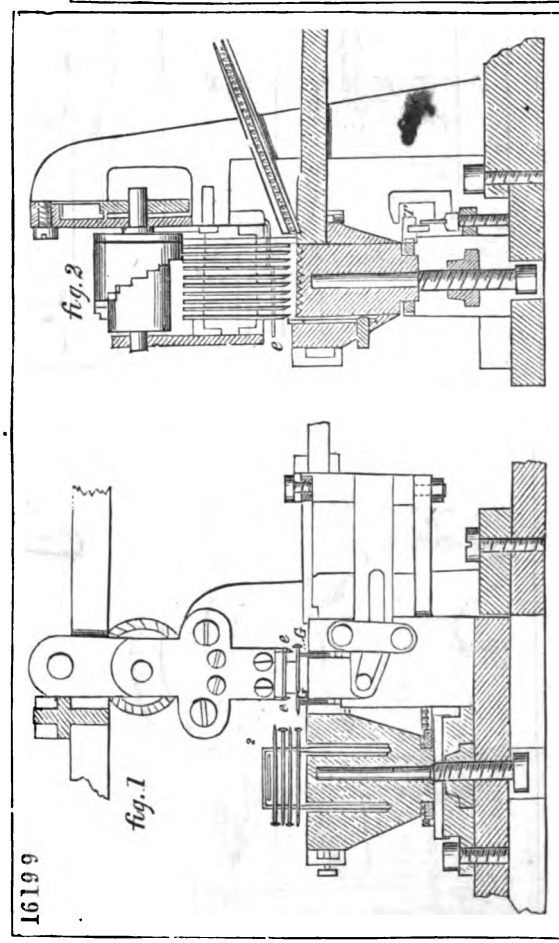

15343

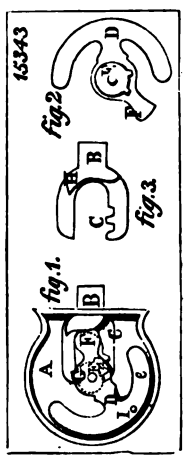

Digitized by Google

15700

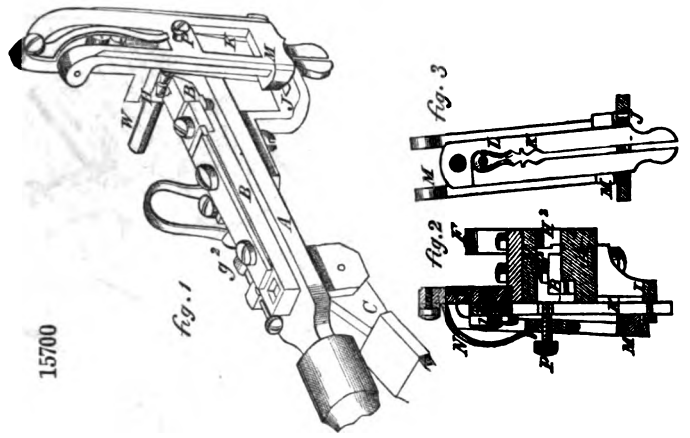

14552

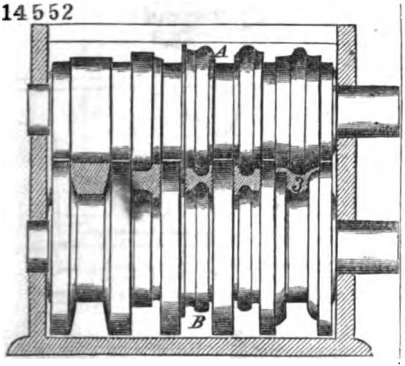

15932

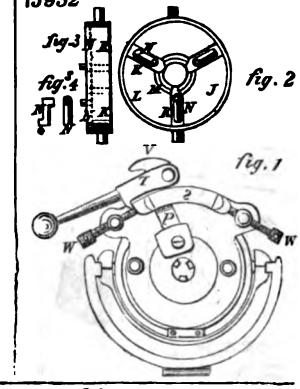

14137

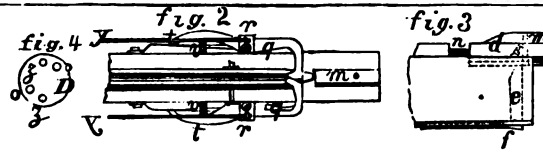

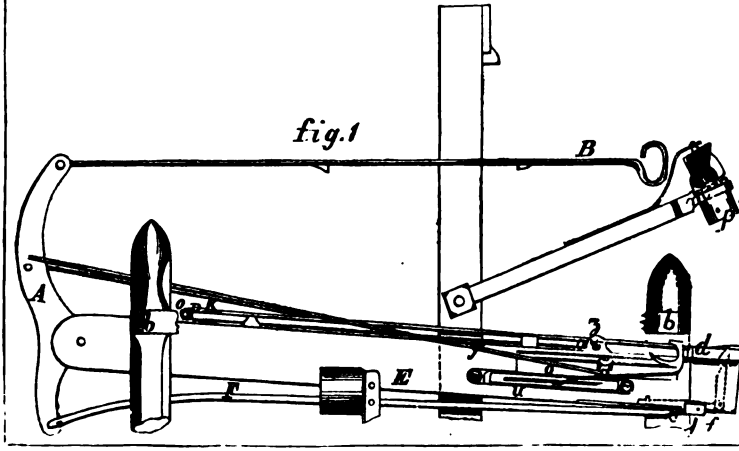

Digitized by Google

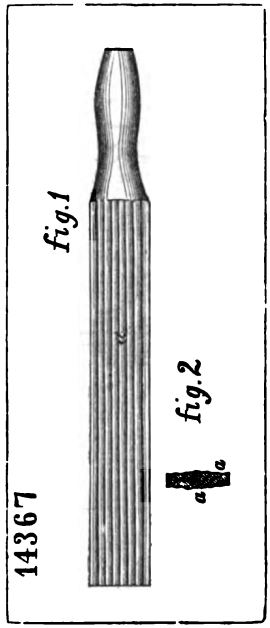

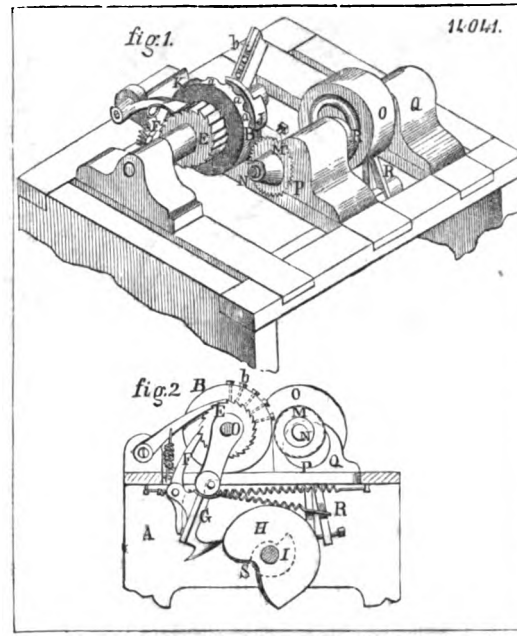

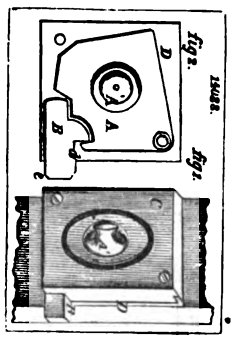

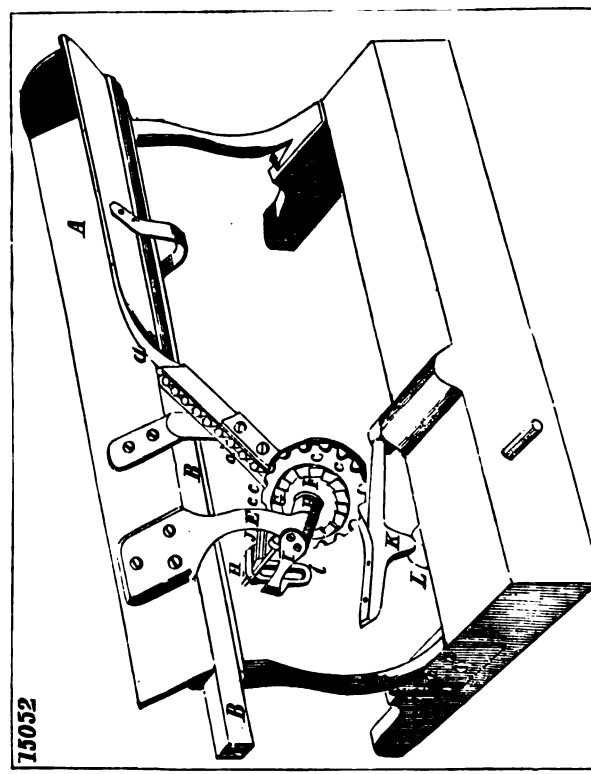

Digitized by Google

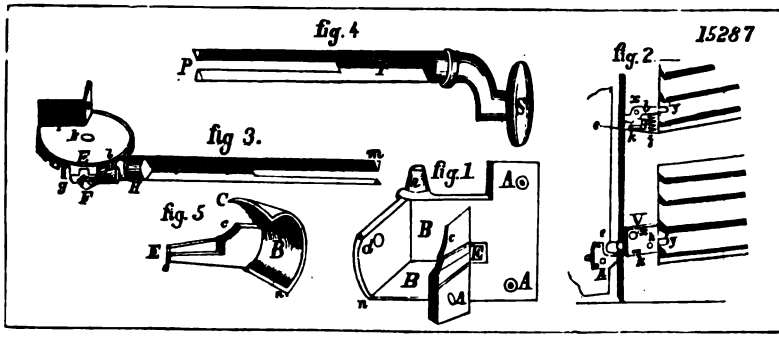

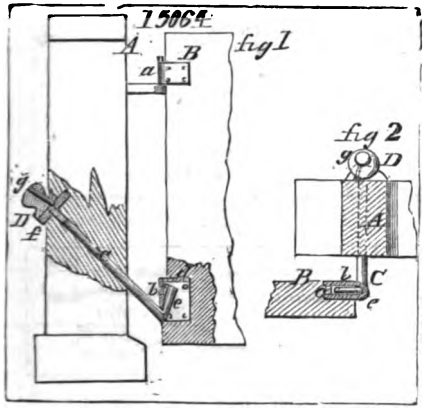

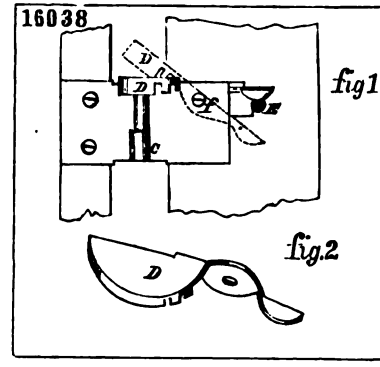

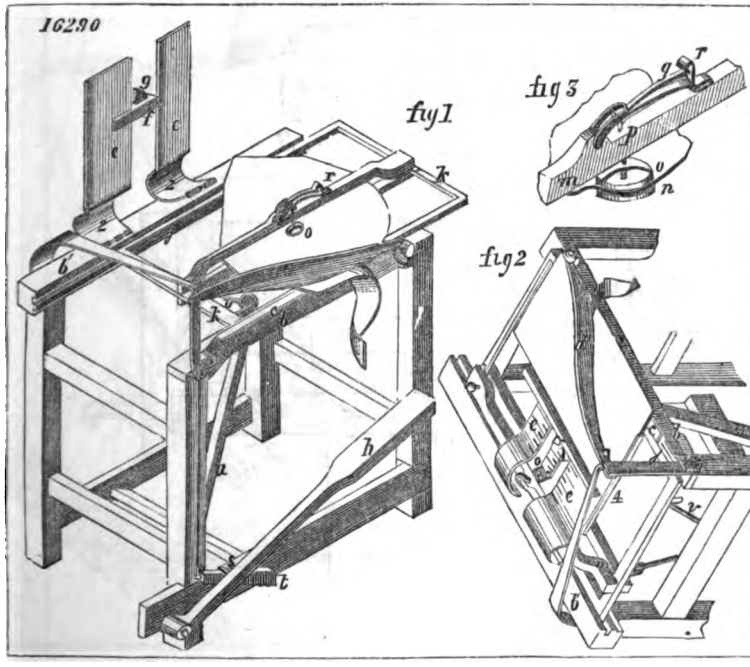

Digitized by Google

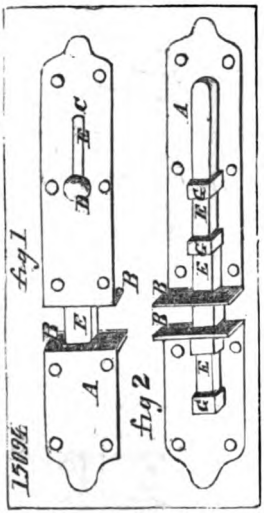

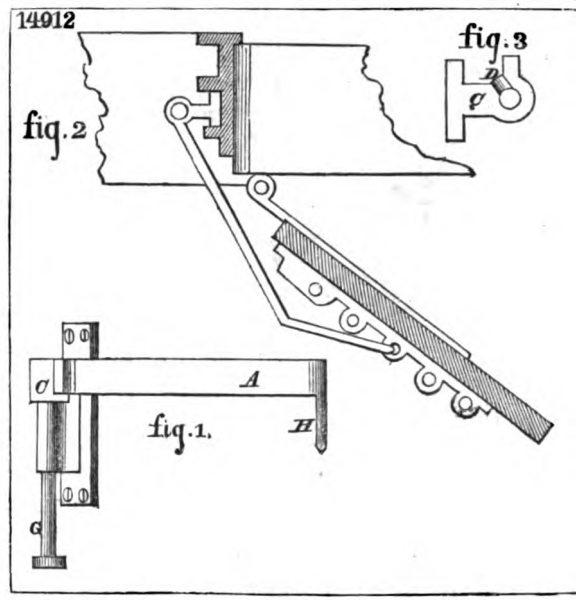

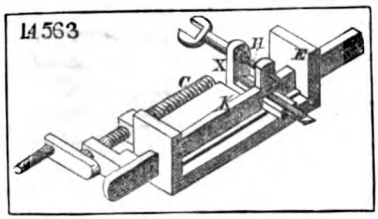

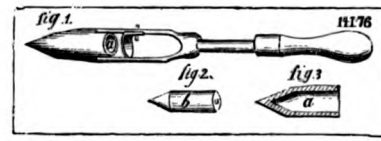

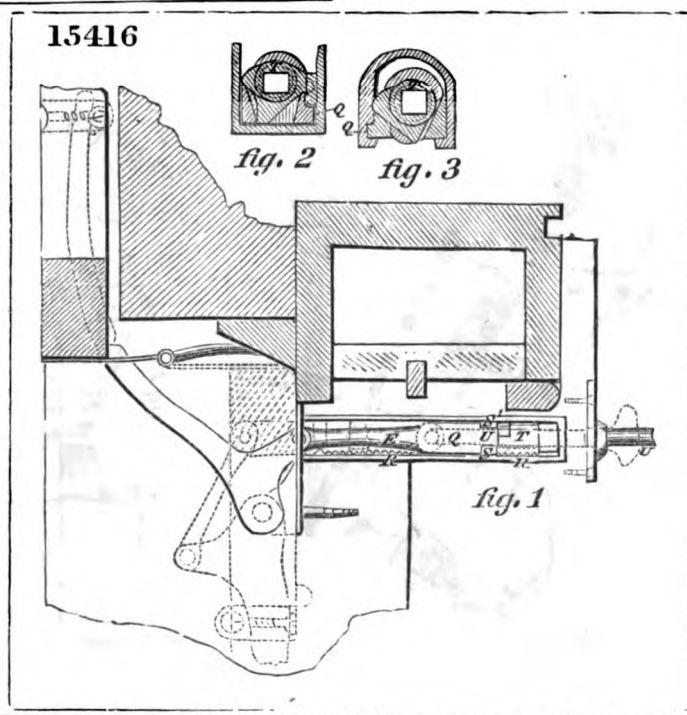

Digitized by Google

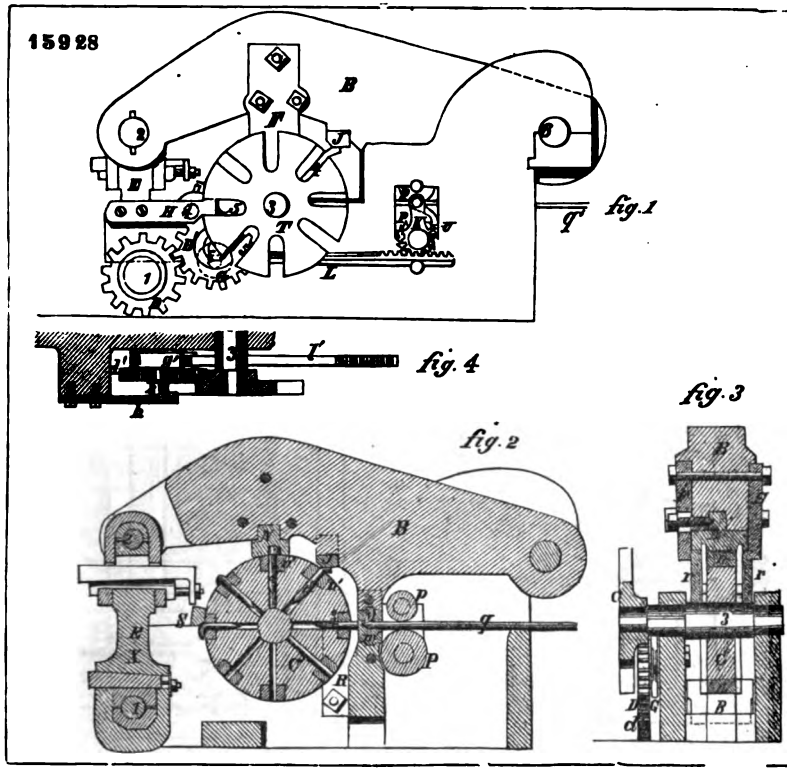

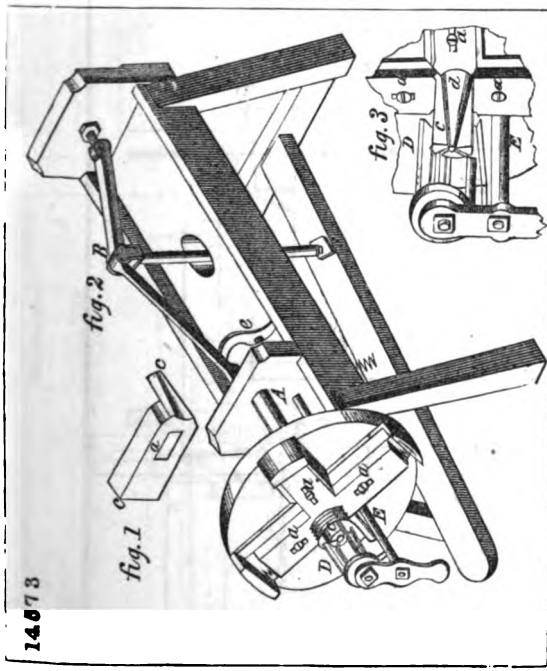

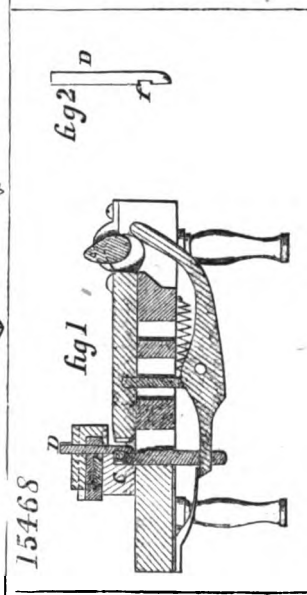

Digitized by Google

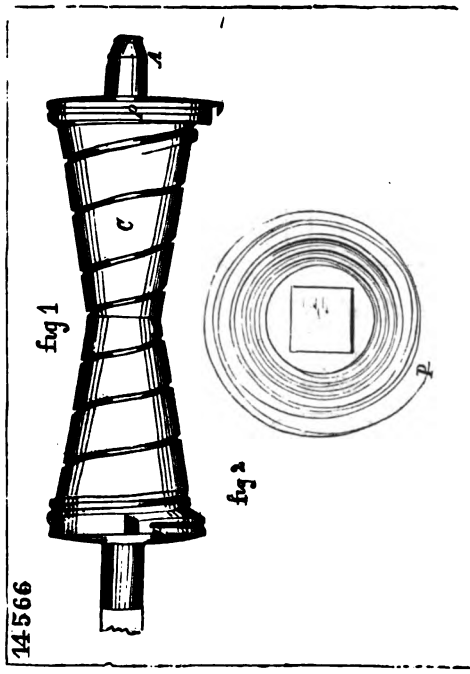

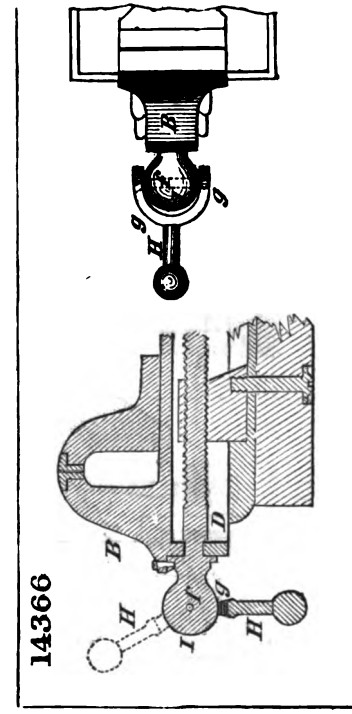

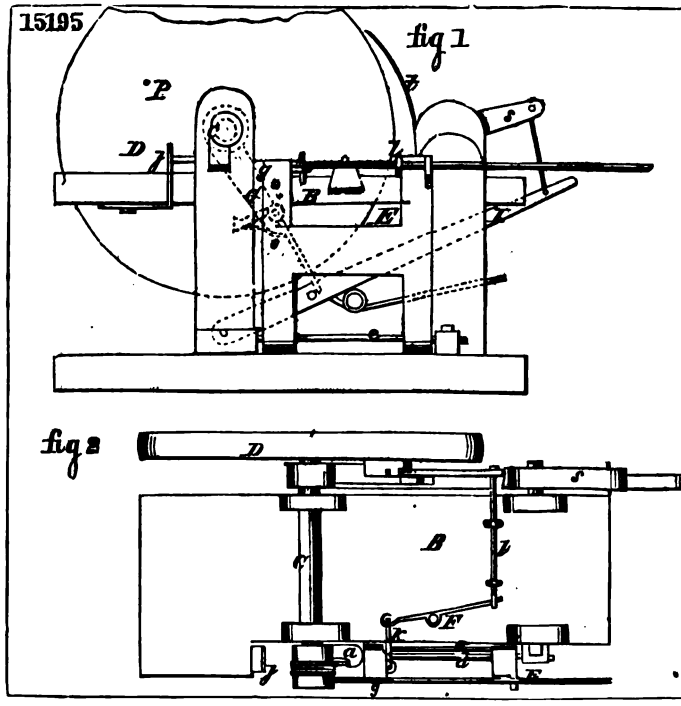

Digitized by Google

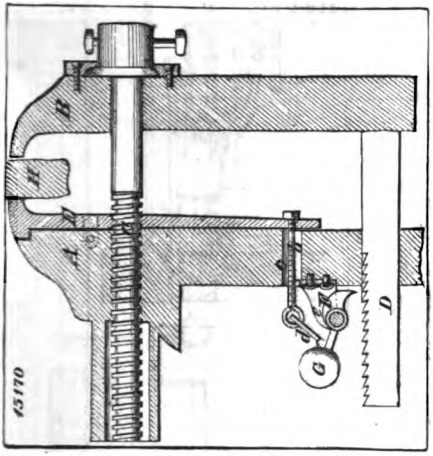

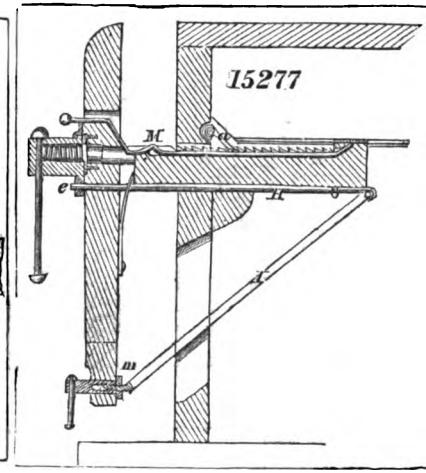

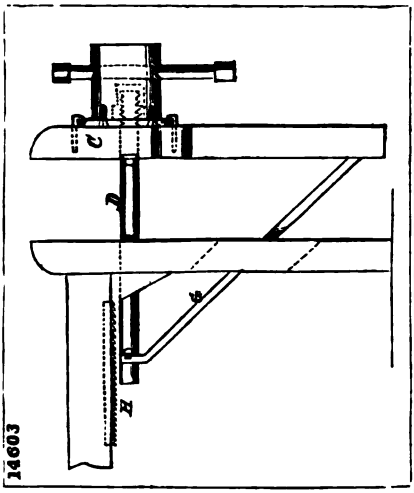

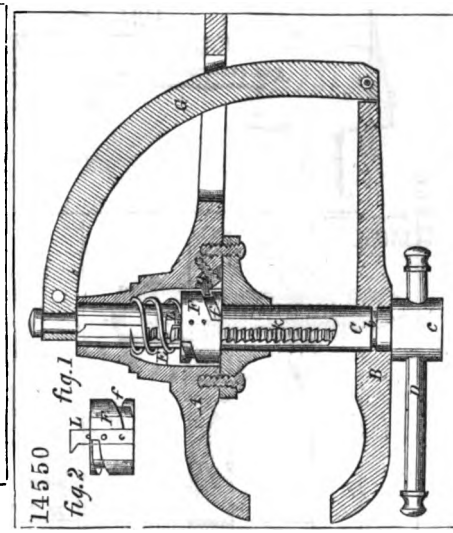

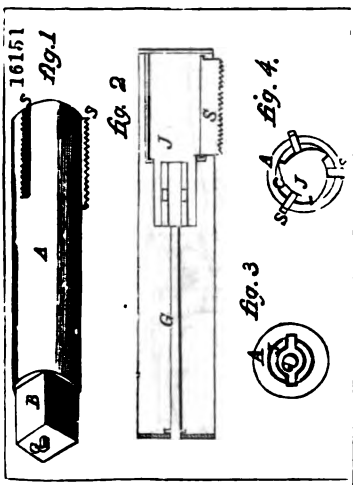

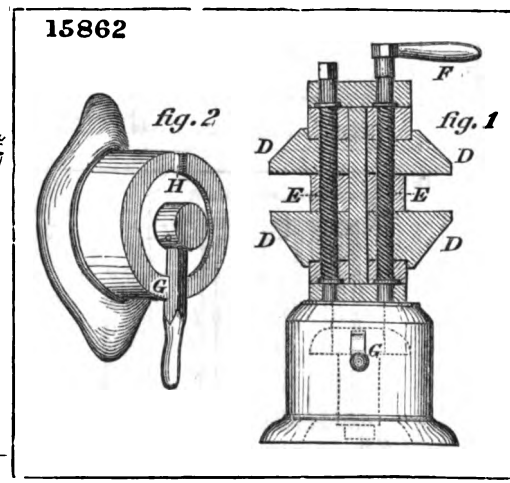

Digitized by Google

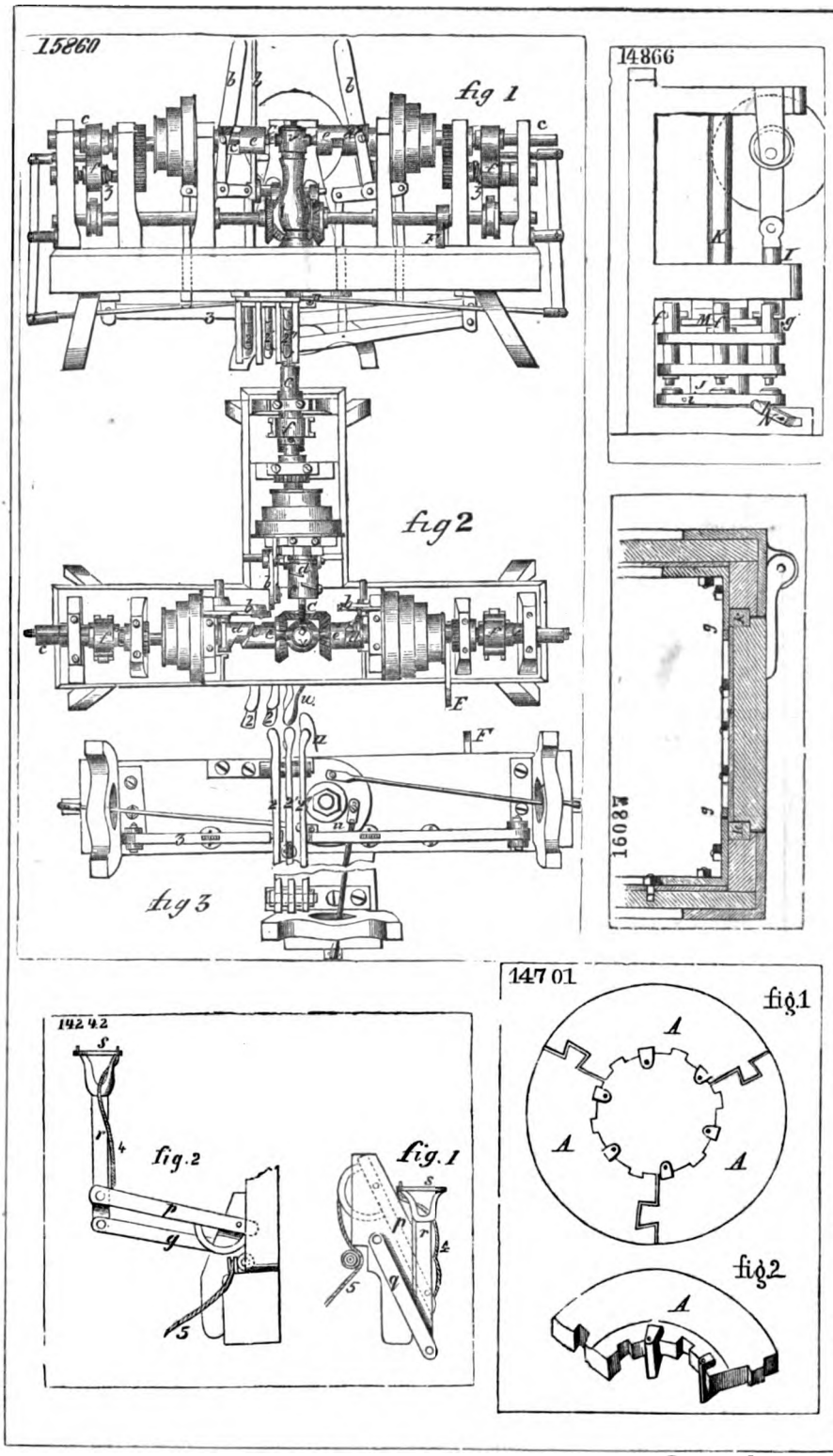

Digitized by Google

14807

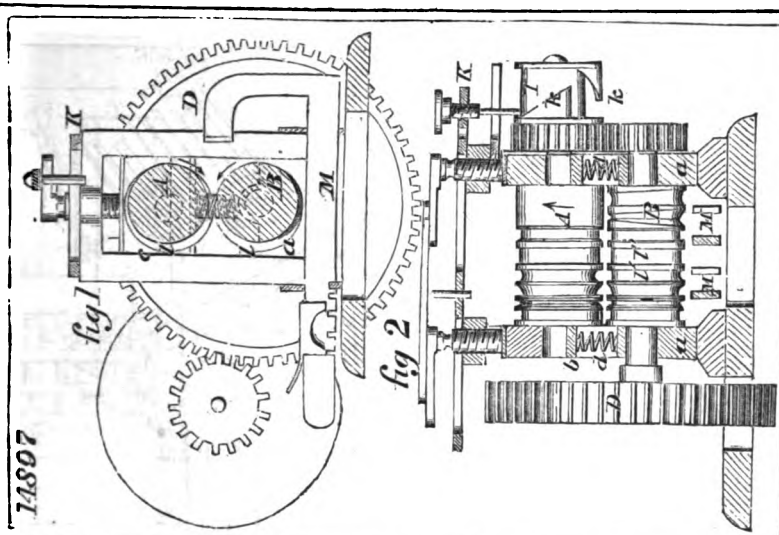

14600

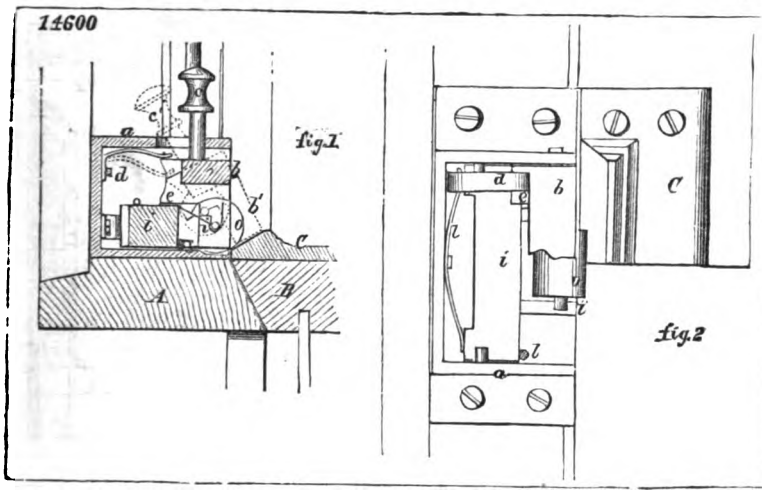

14166

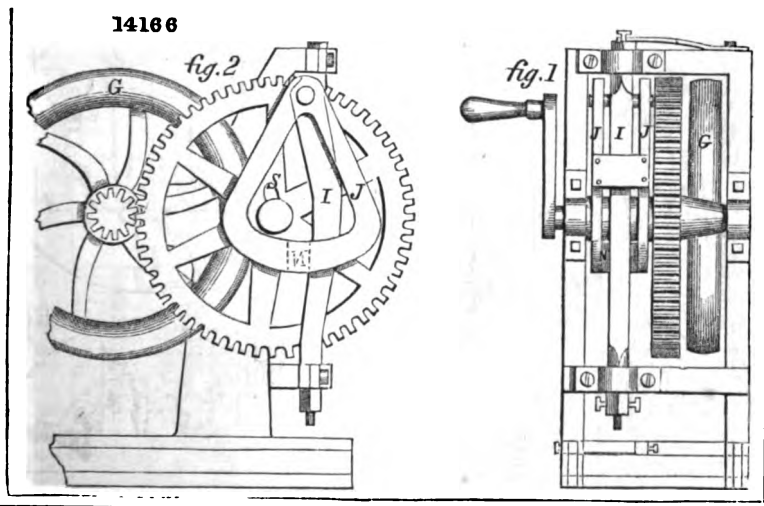

Digitized by Google

15523

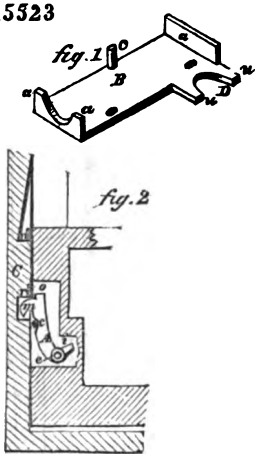

15404

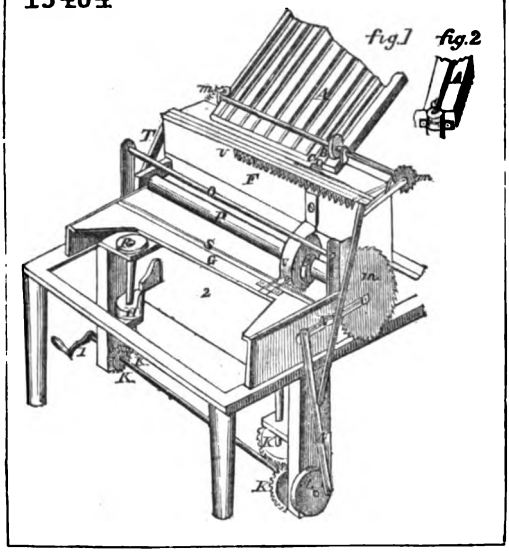

15939

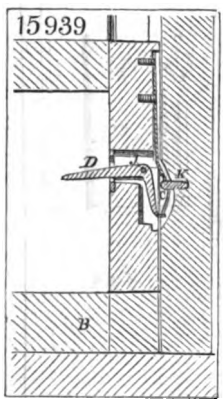

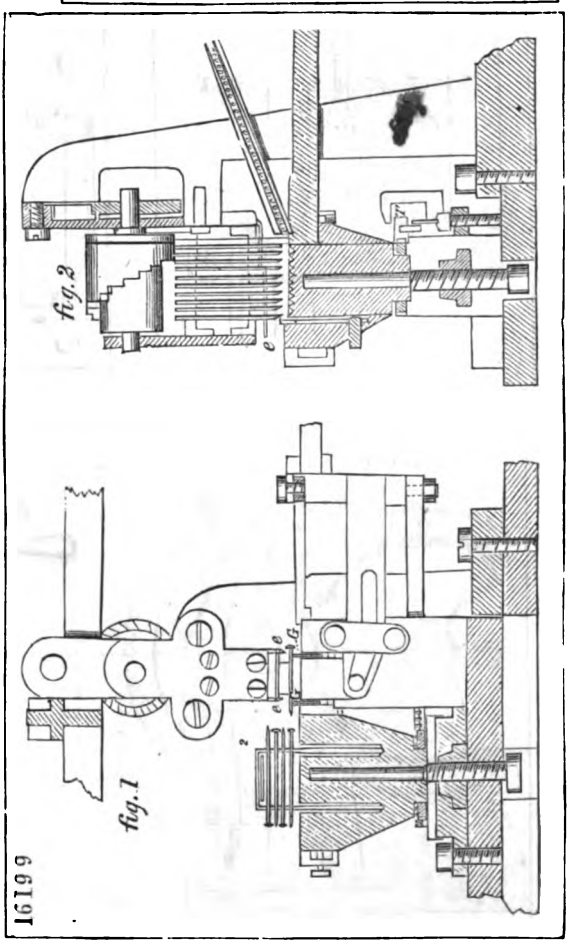

15343

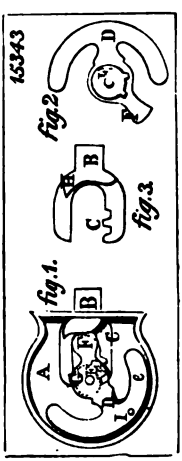

Digitized by Google

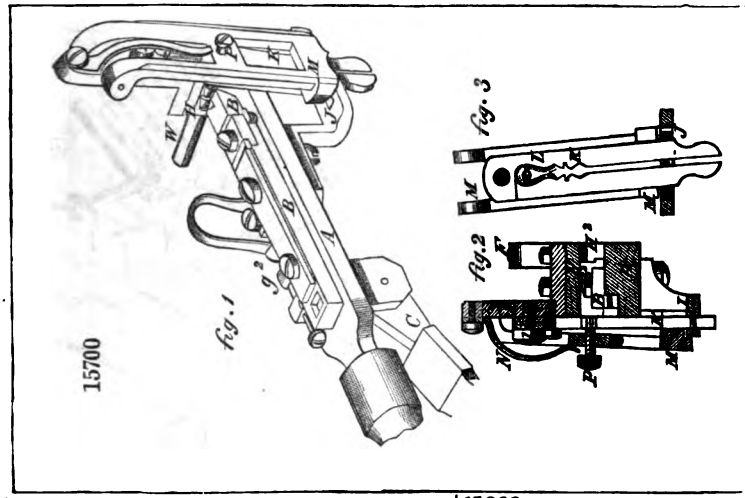

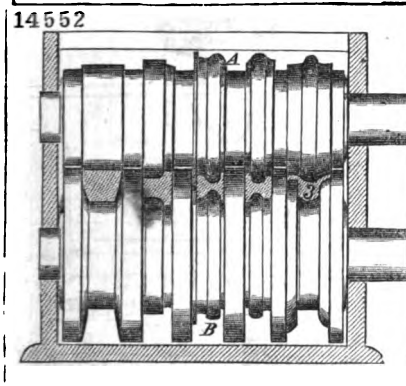

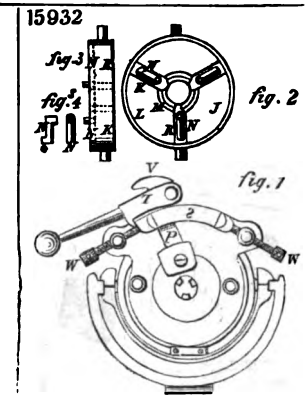

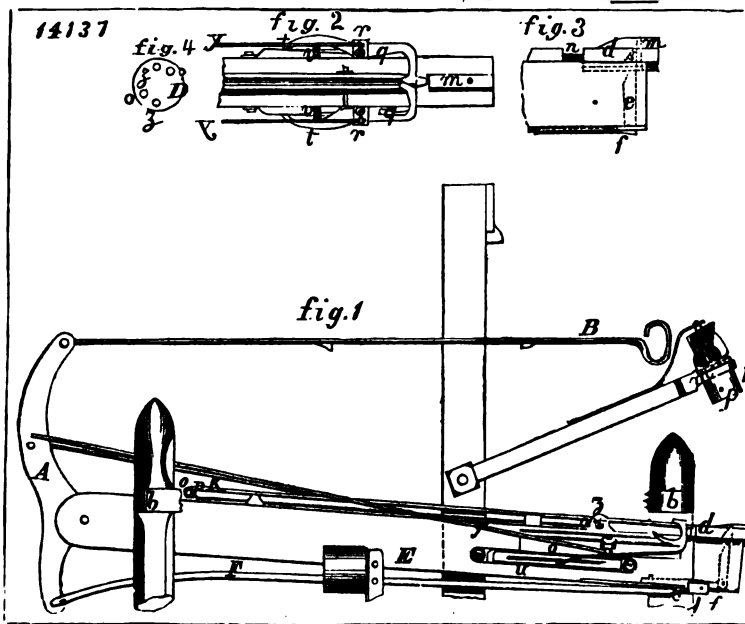

Digitized by Google

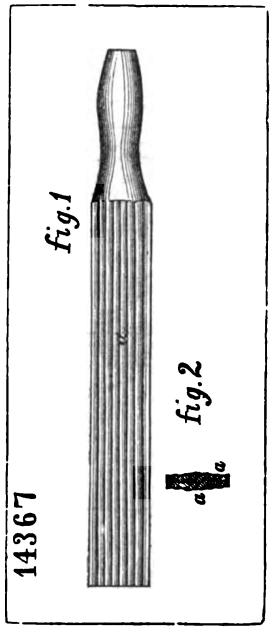

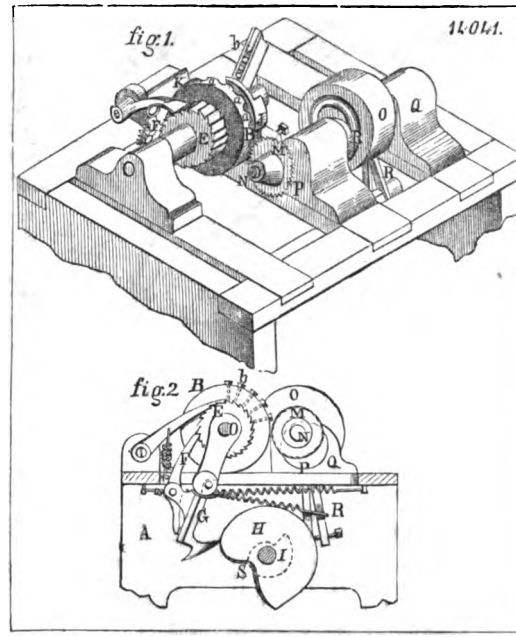

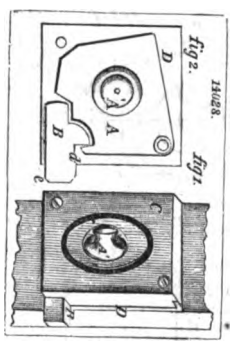

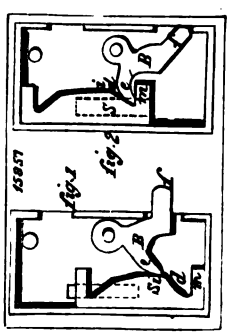

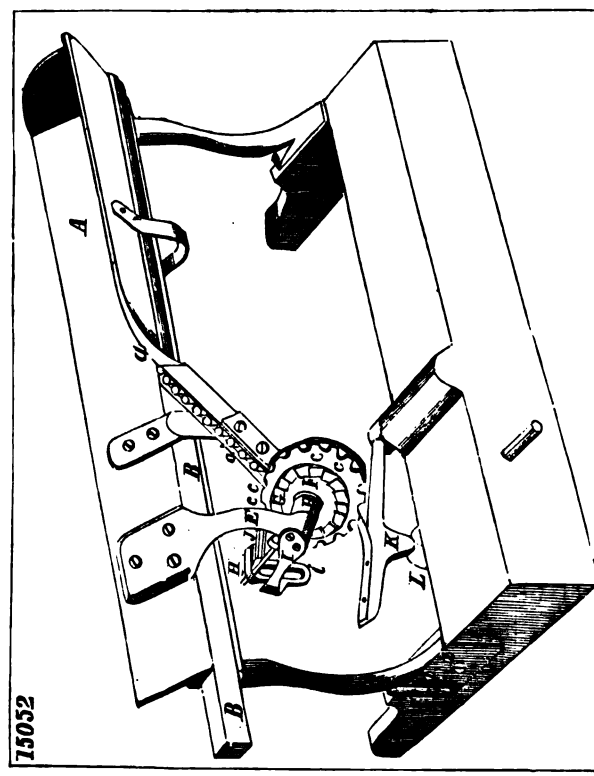

Digitized by Google

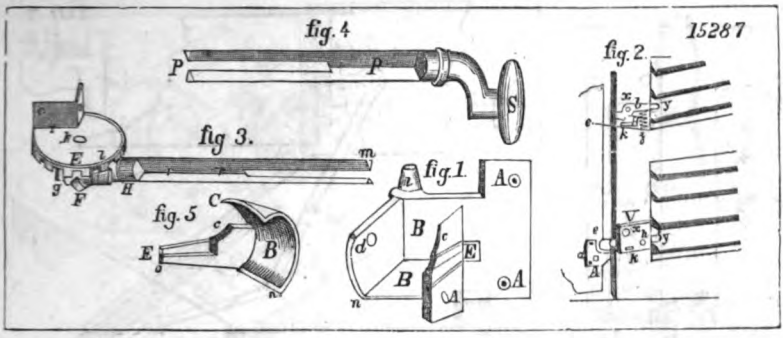

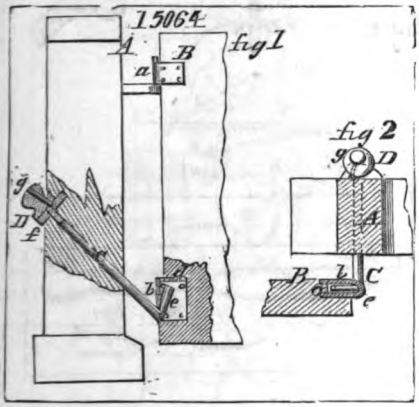

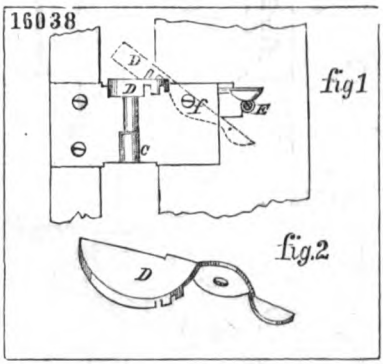

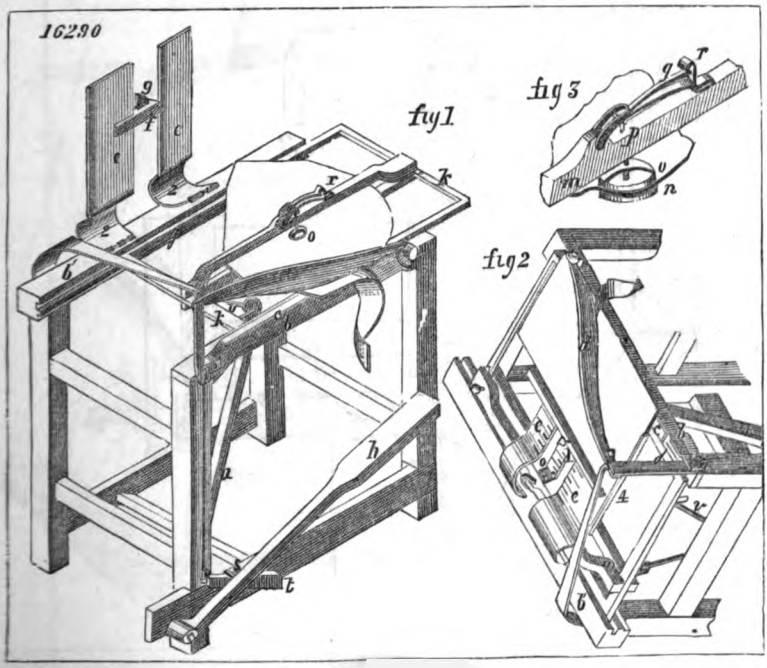

Digitized by Google

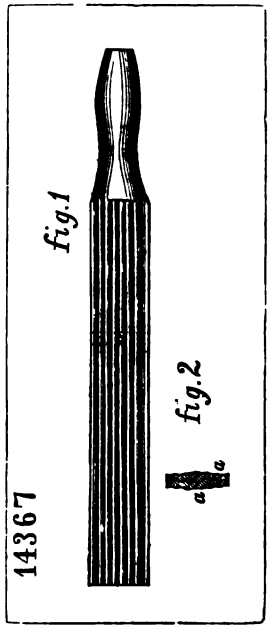

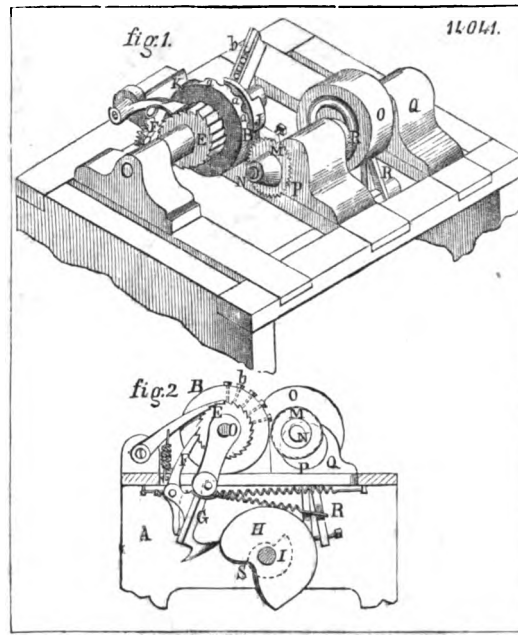

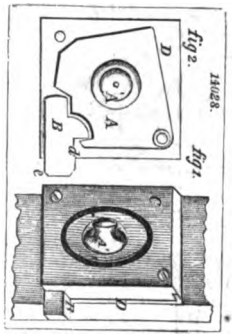

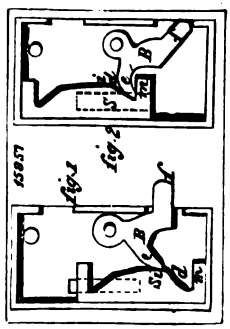

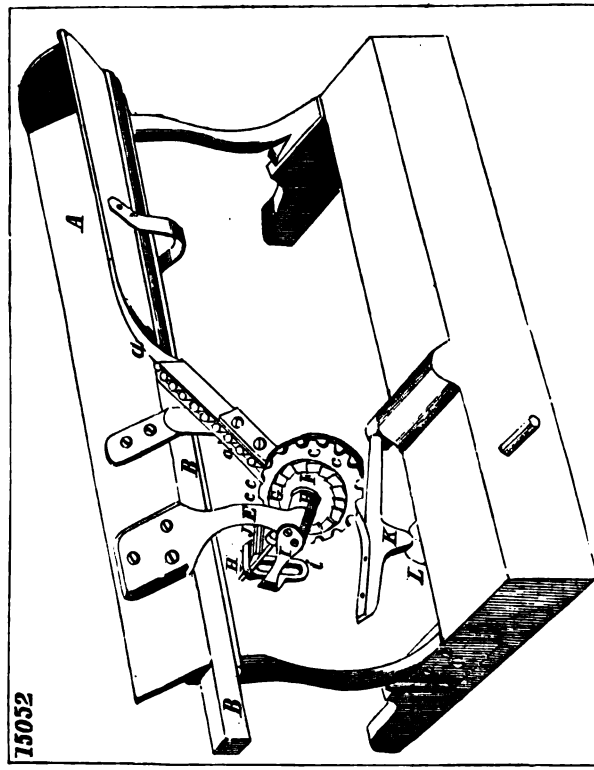

Digitized by Google

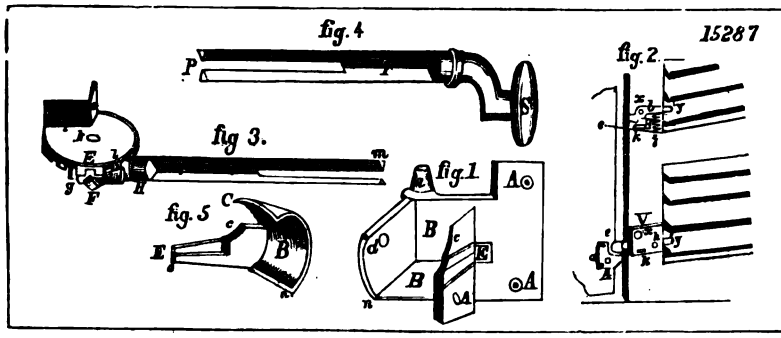

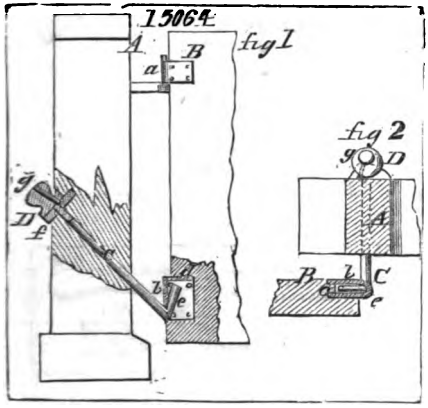

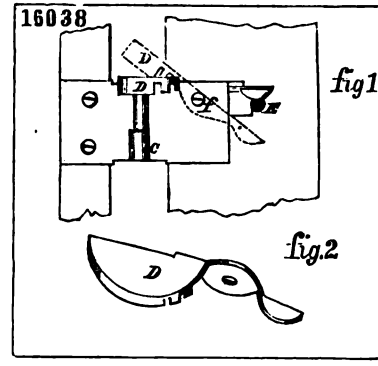

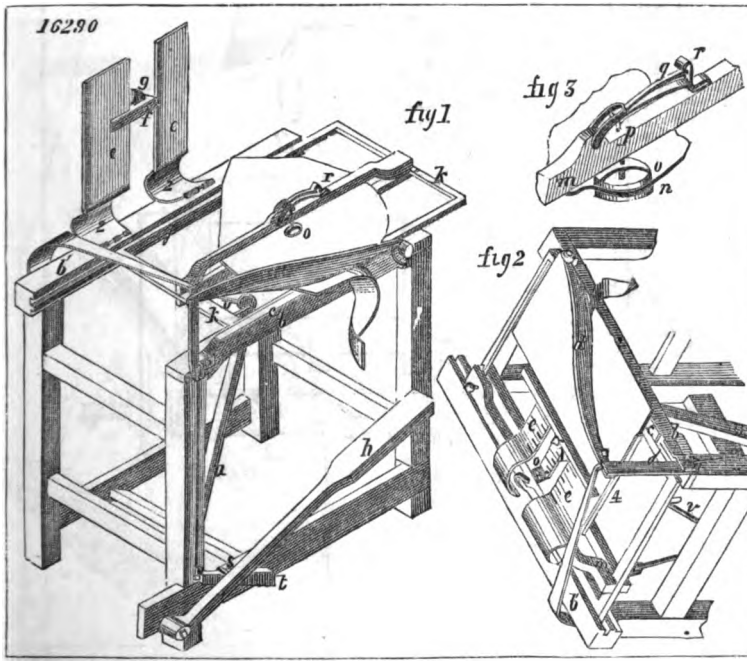

Digitized by Google

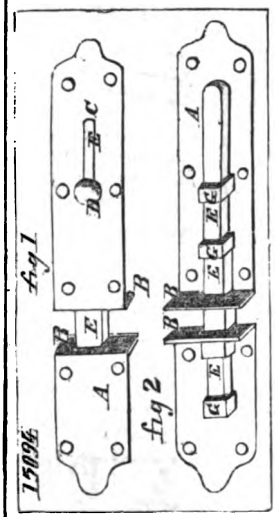

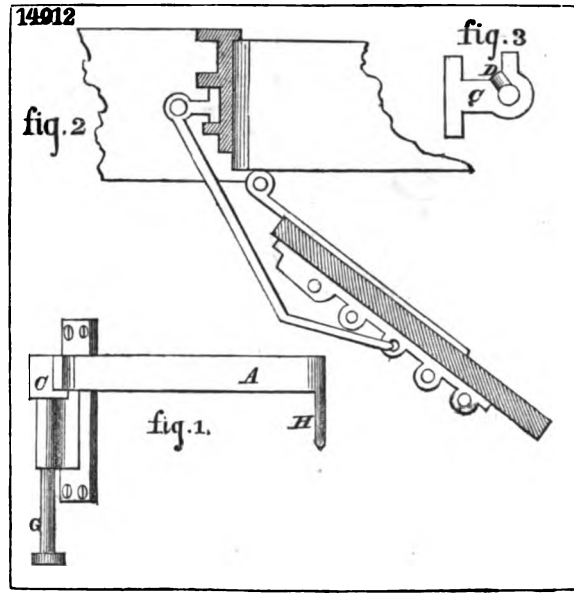

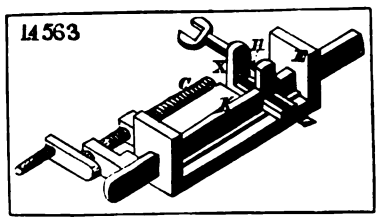

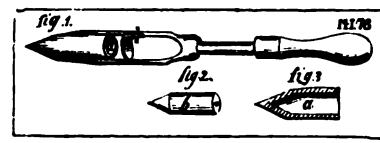

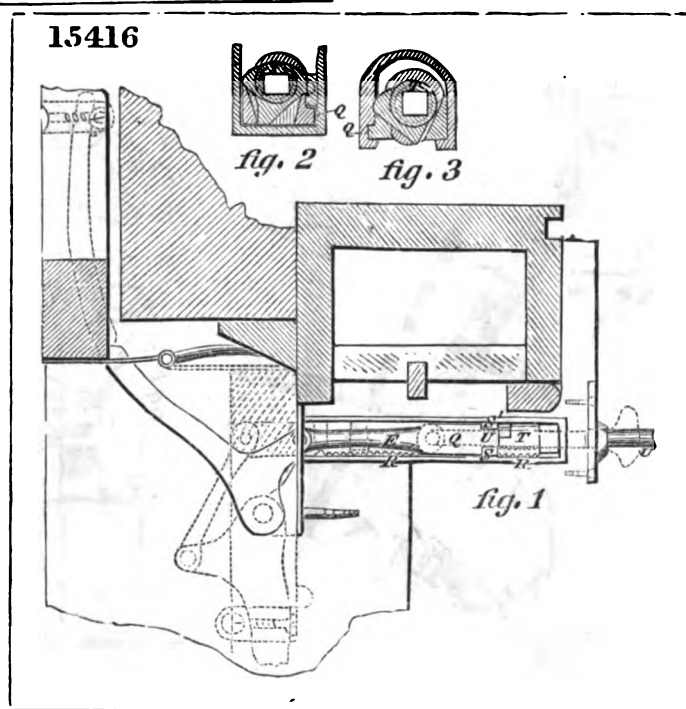

Digitized by Google

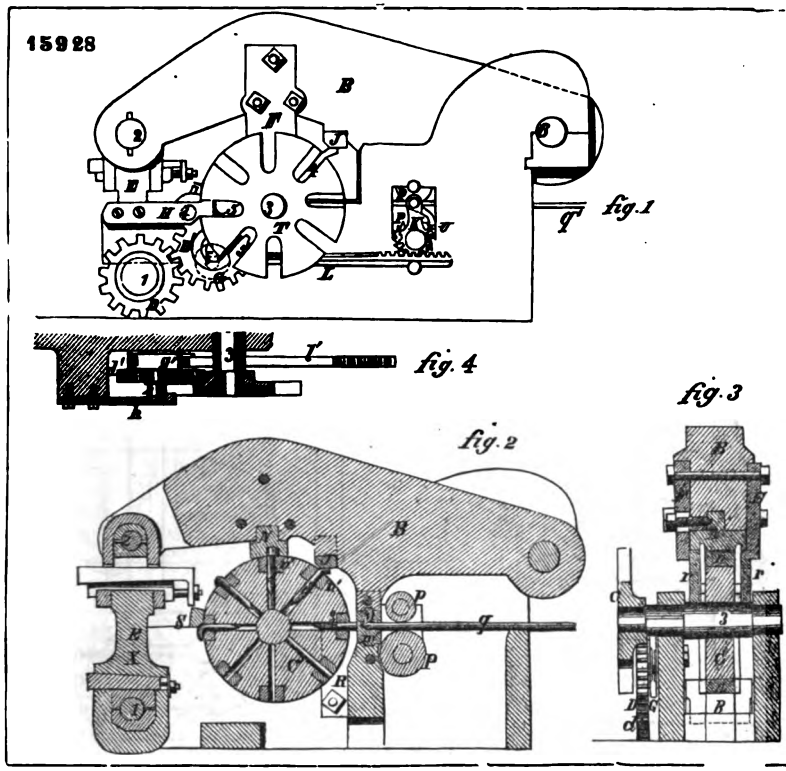

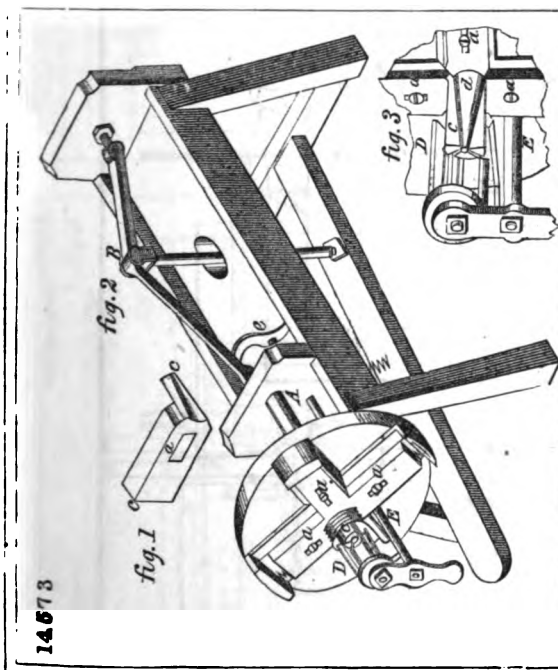

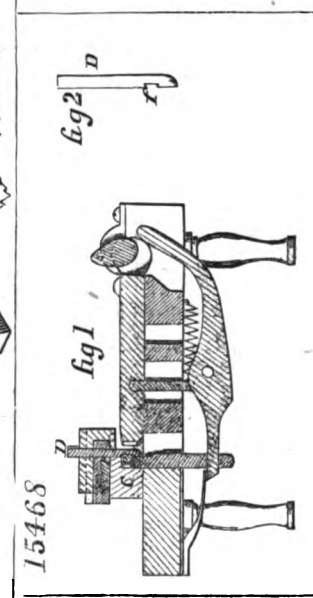

Digitized by Google

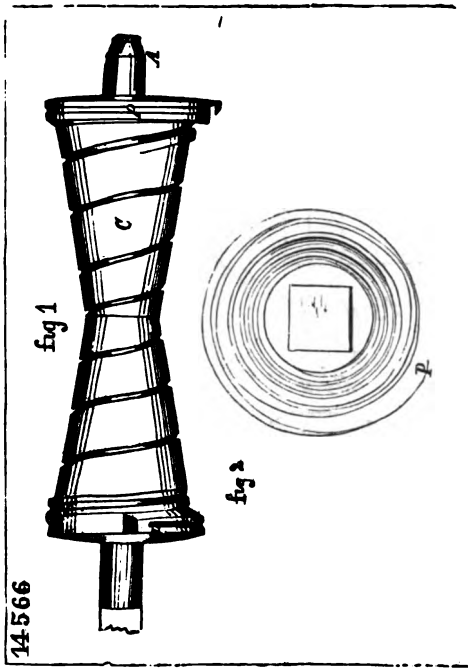

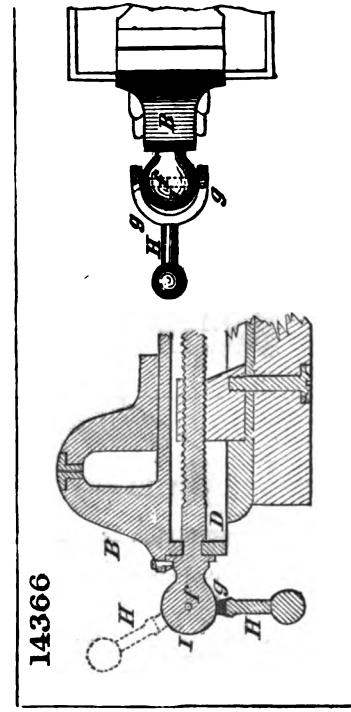

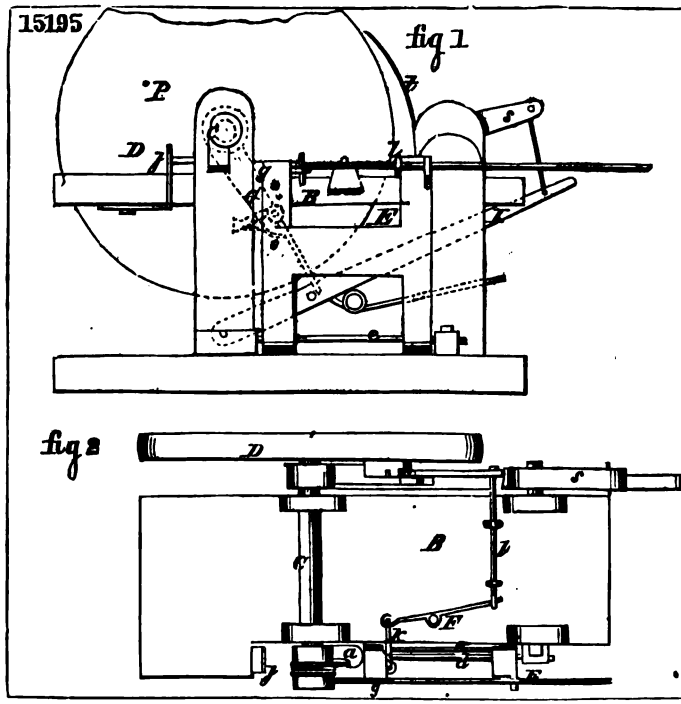

Digitized by Google

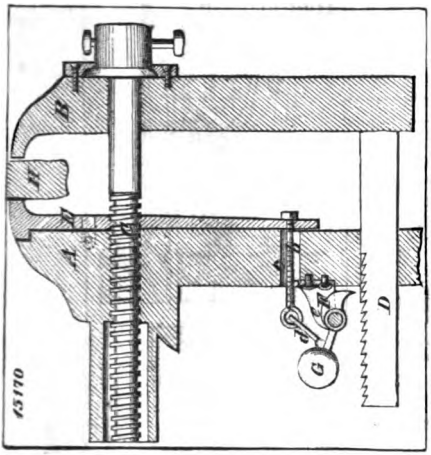

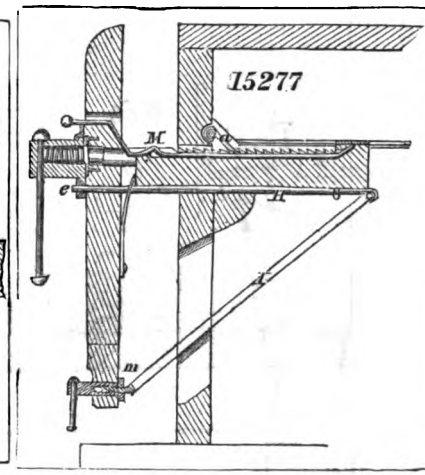

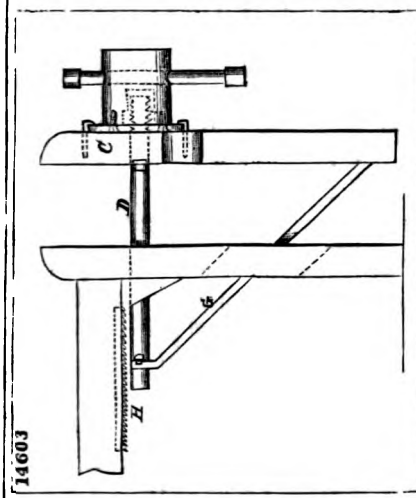

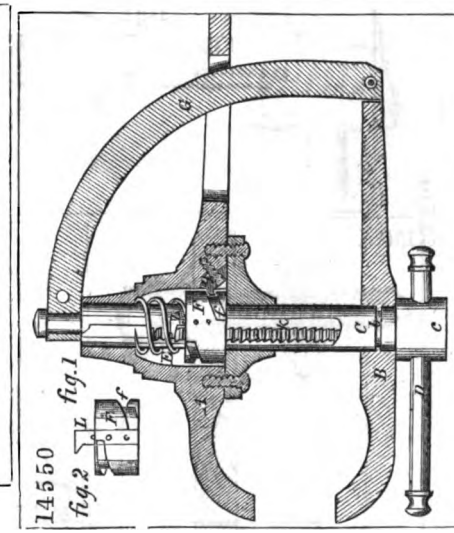

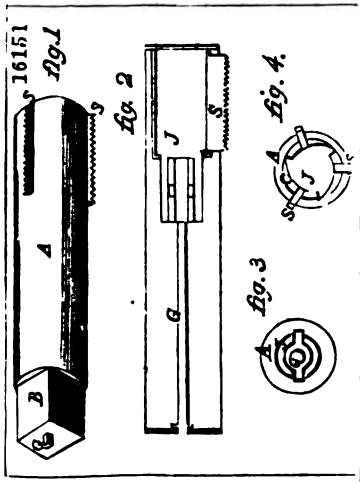

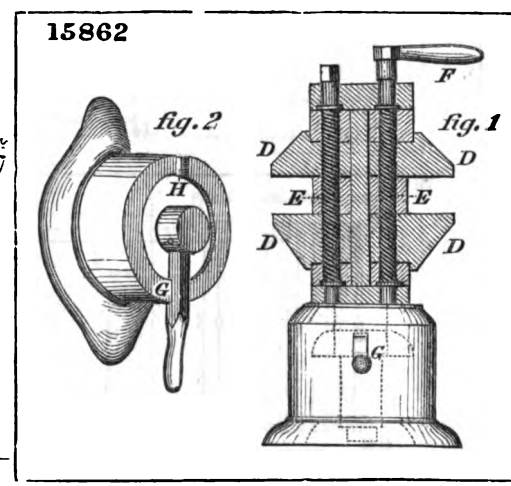

Digitized by Google

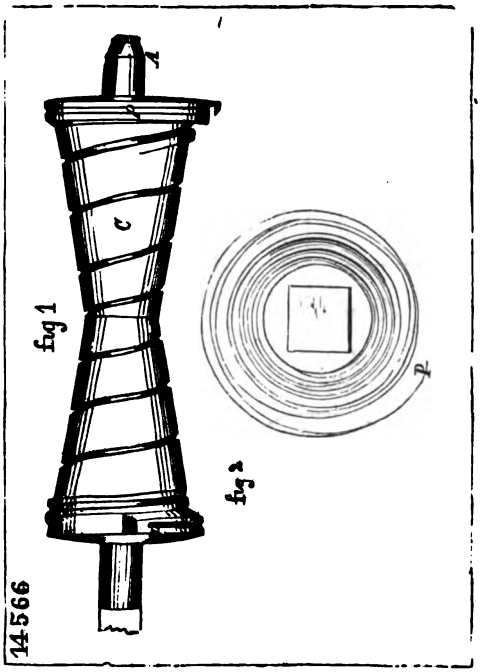

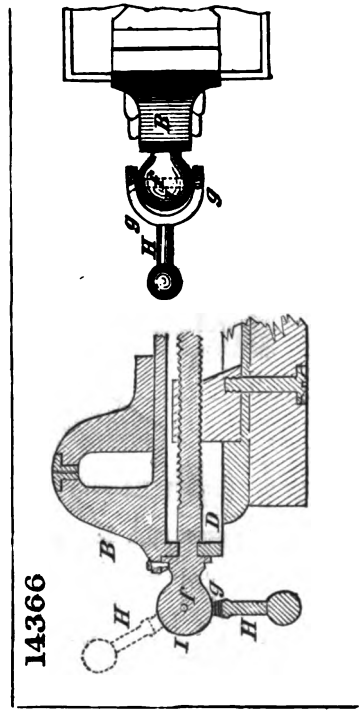

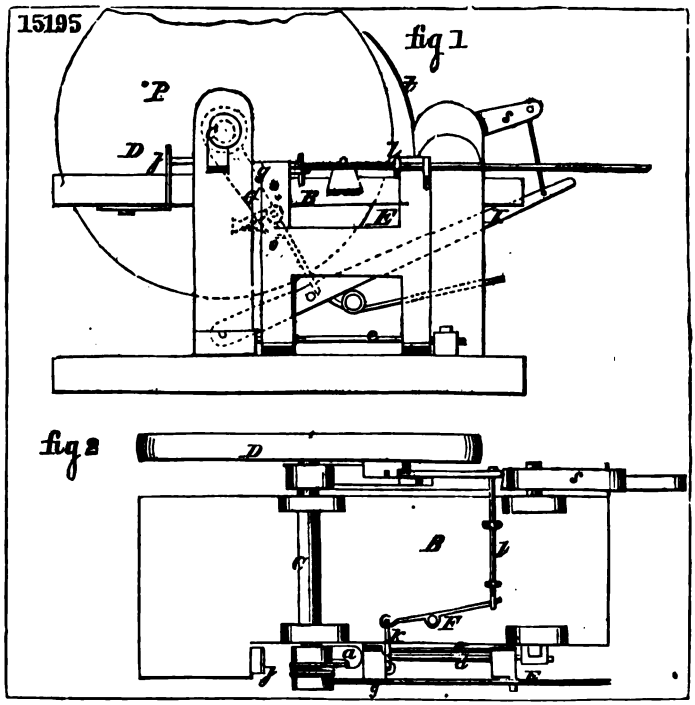

Digitized by Google

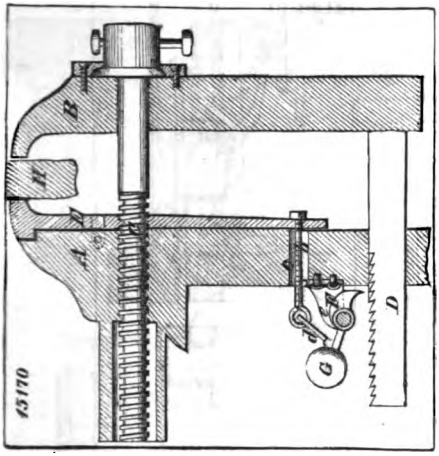

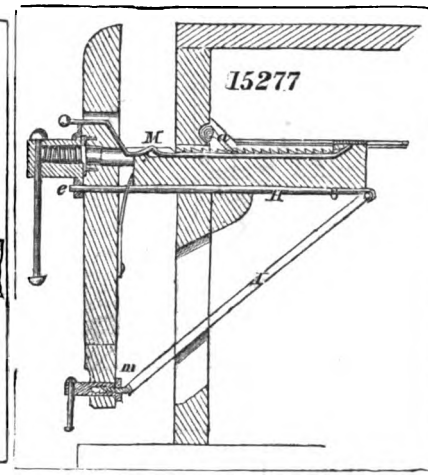

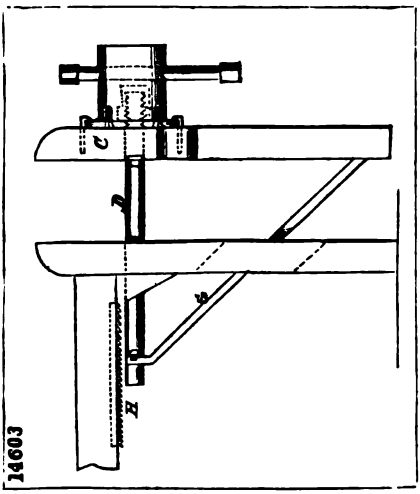

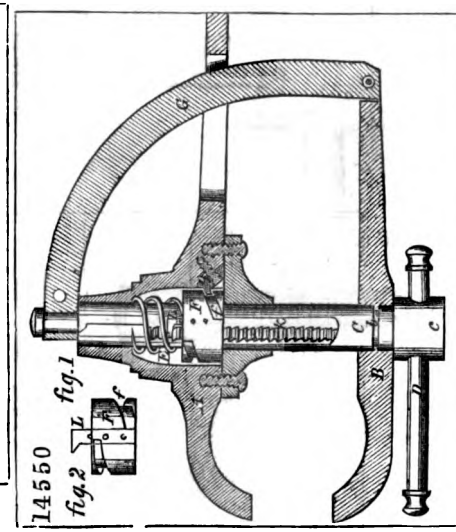

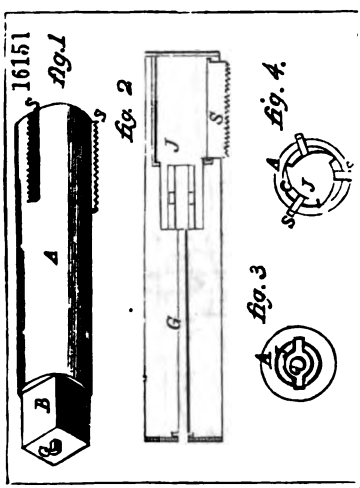

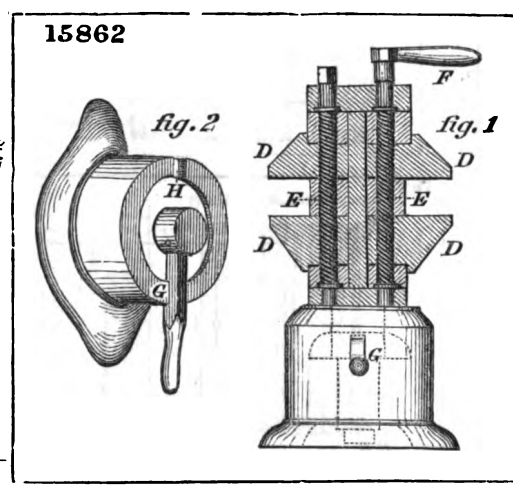

Digitized by Google

16252

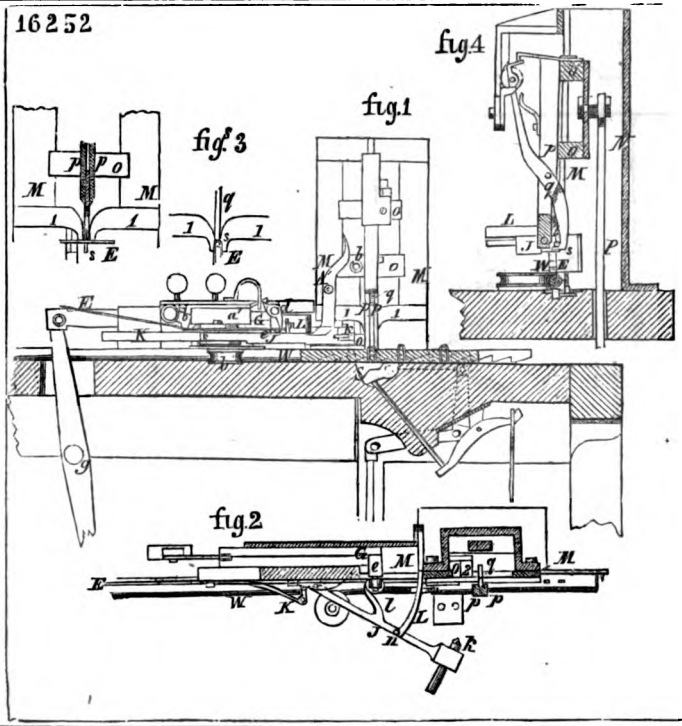

15051

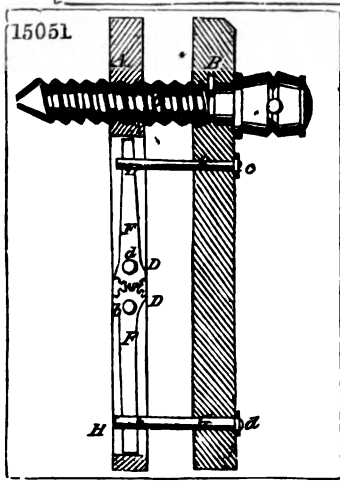

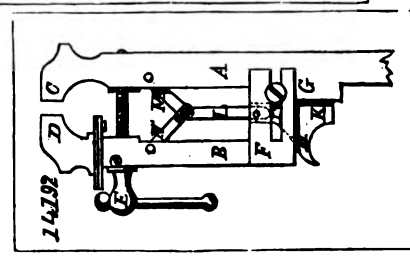

14192

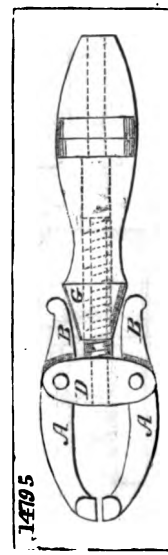

14195

16213

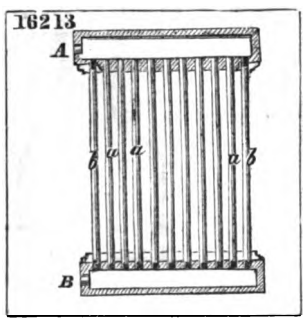

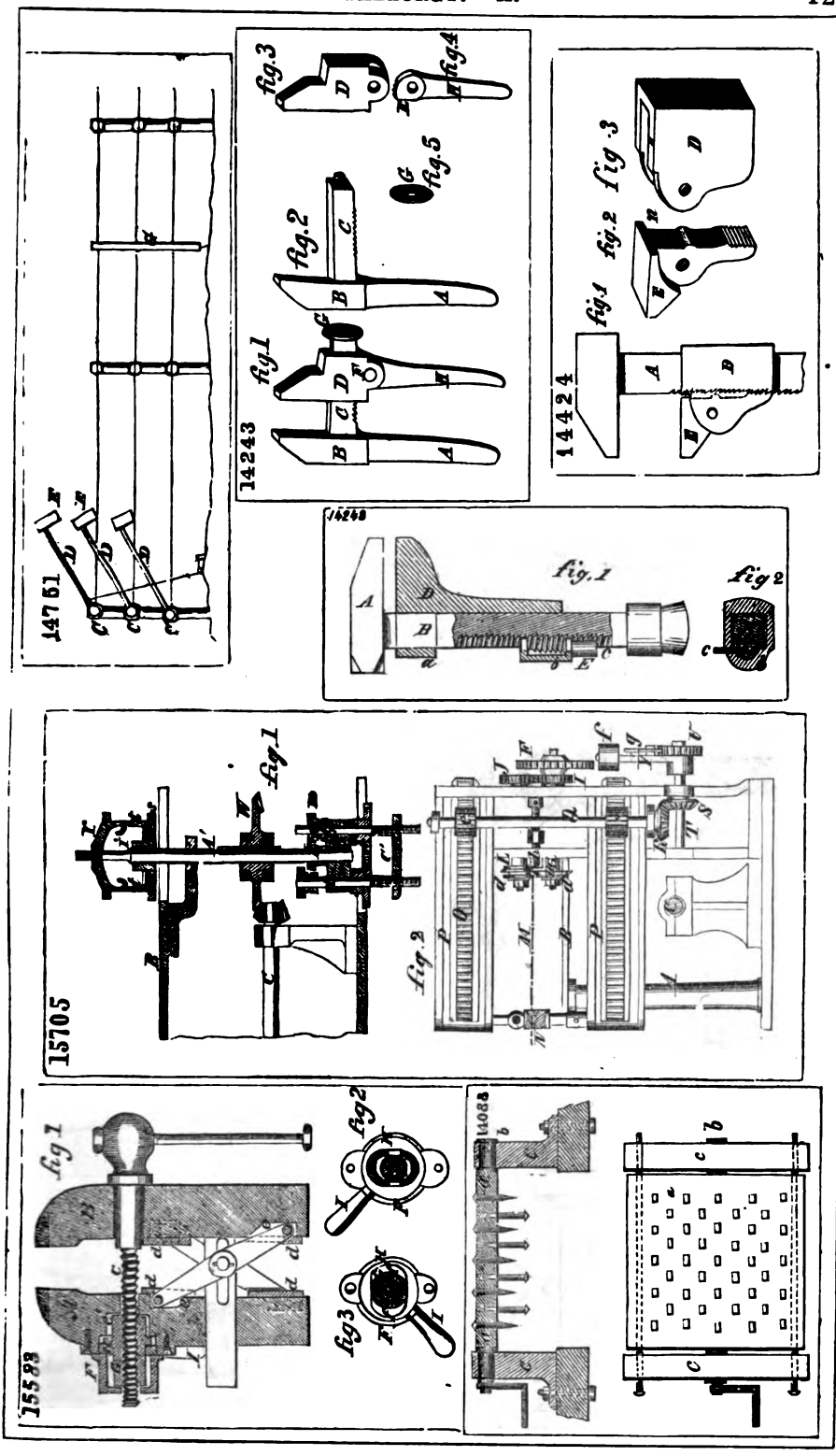

Digitized by Google

16252

fig.4

fig.1

fig.3

fig.2

15051

14192

16213

14195

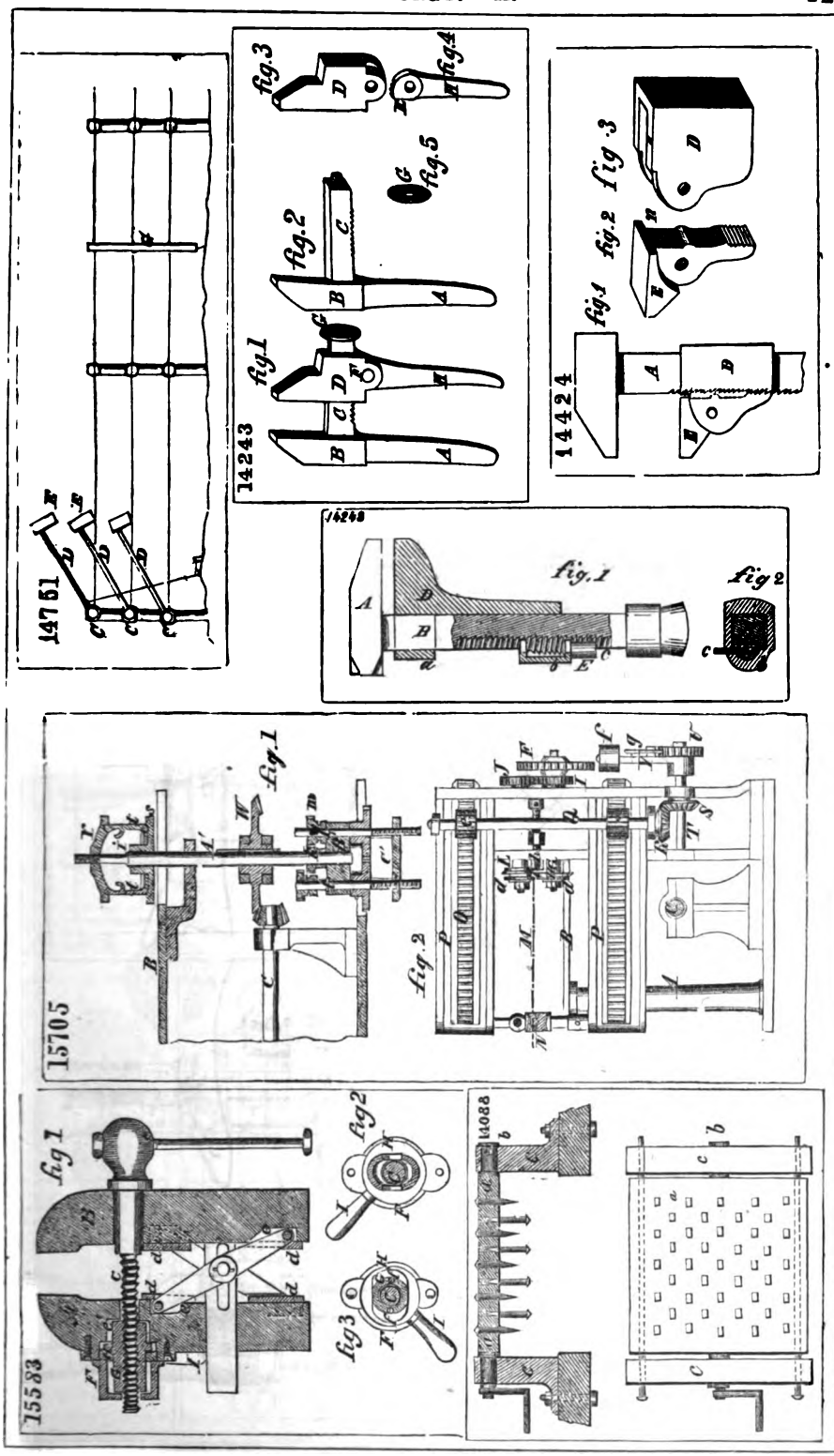

Digitized by Google

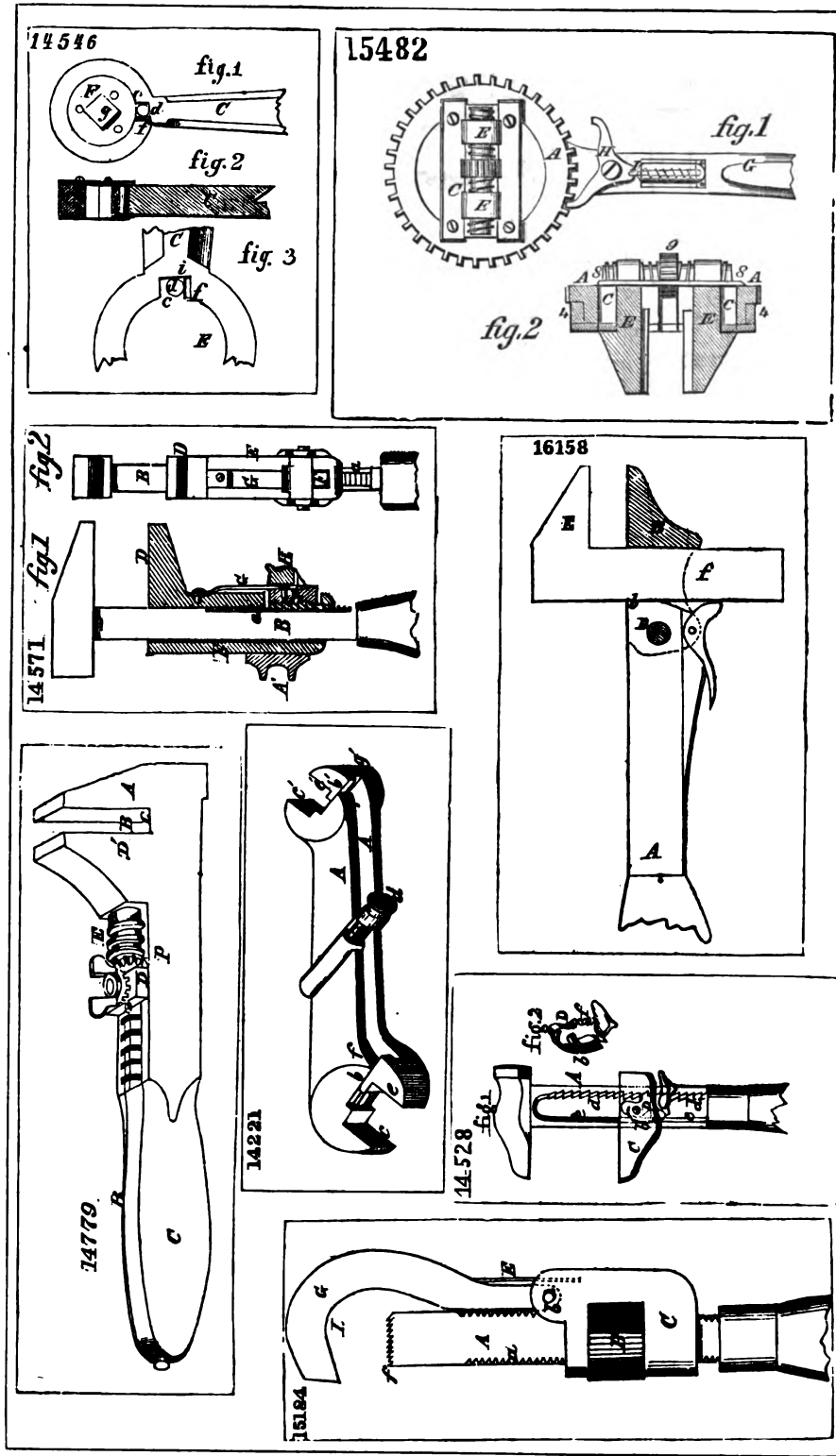

Digitized by Google

1619

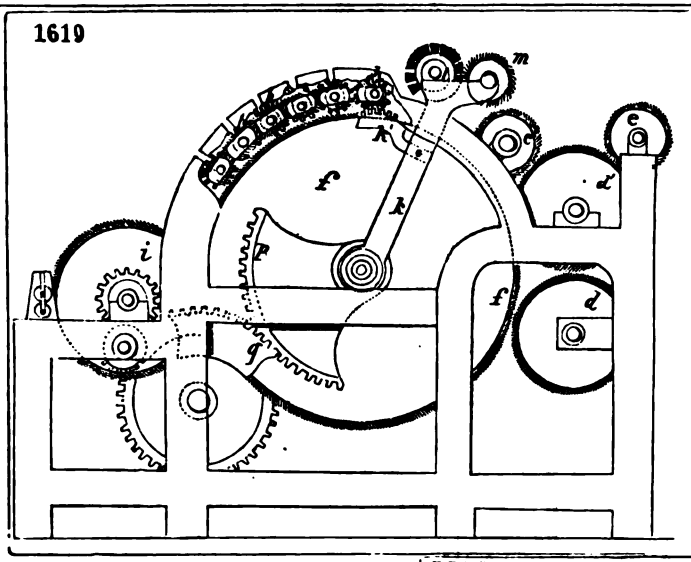

14322

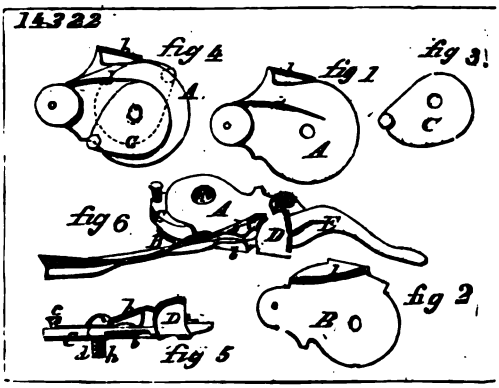

15784

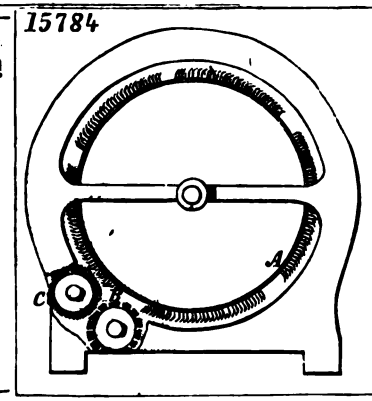

14585

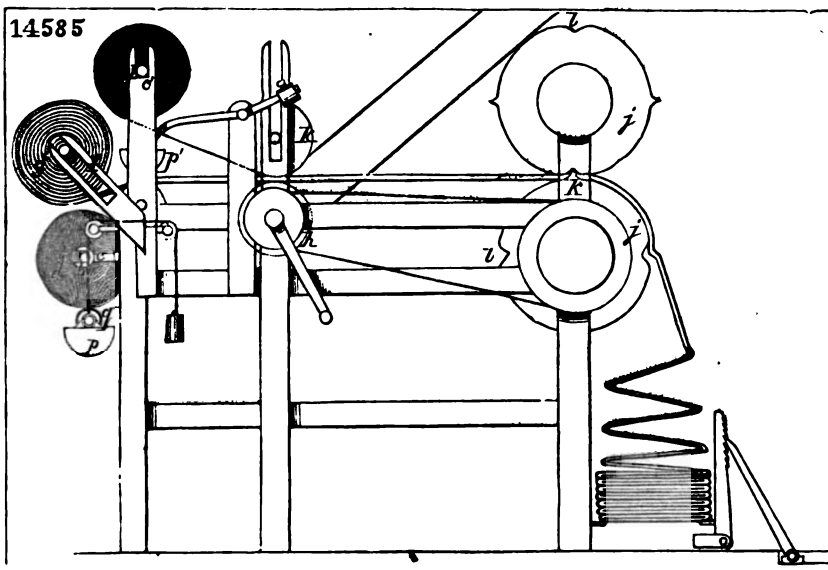

Digitized by Google

15313

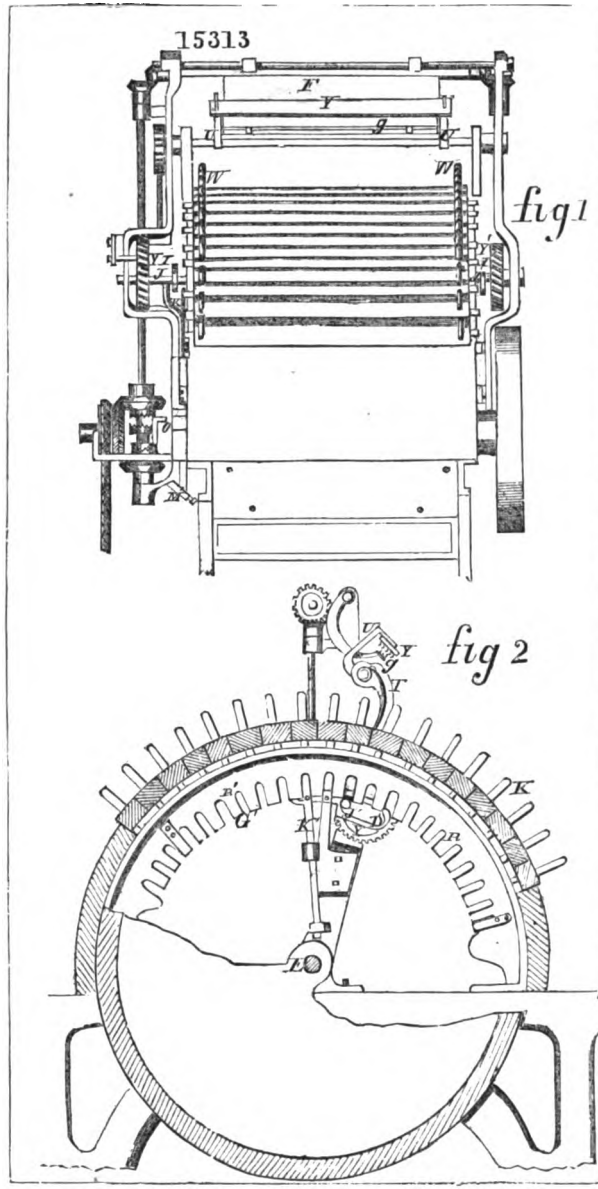

16319

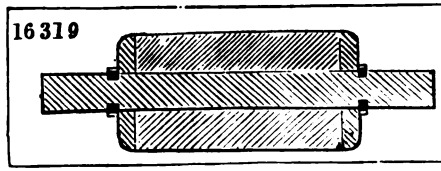

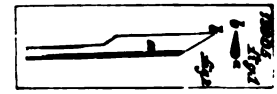

Digitized by Google

14481

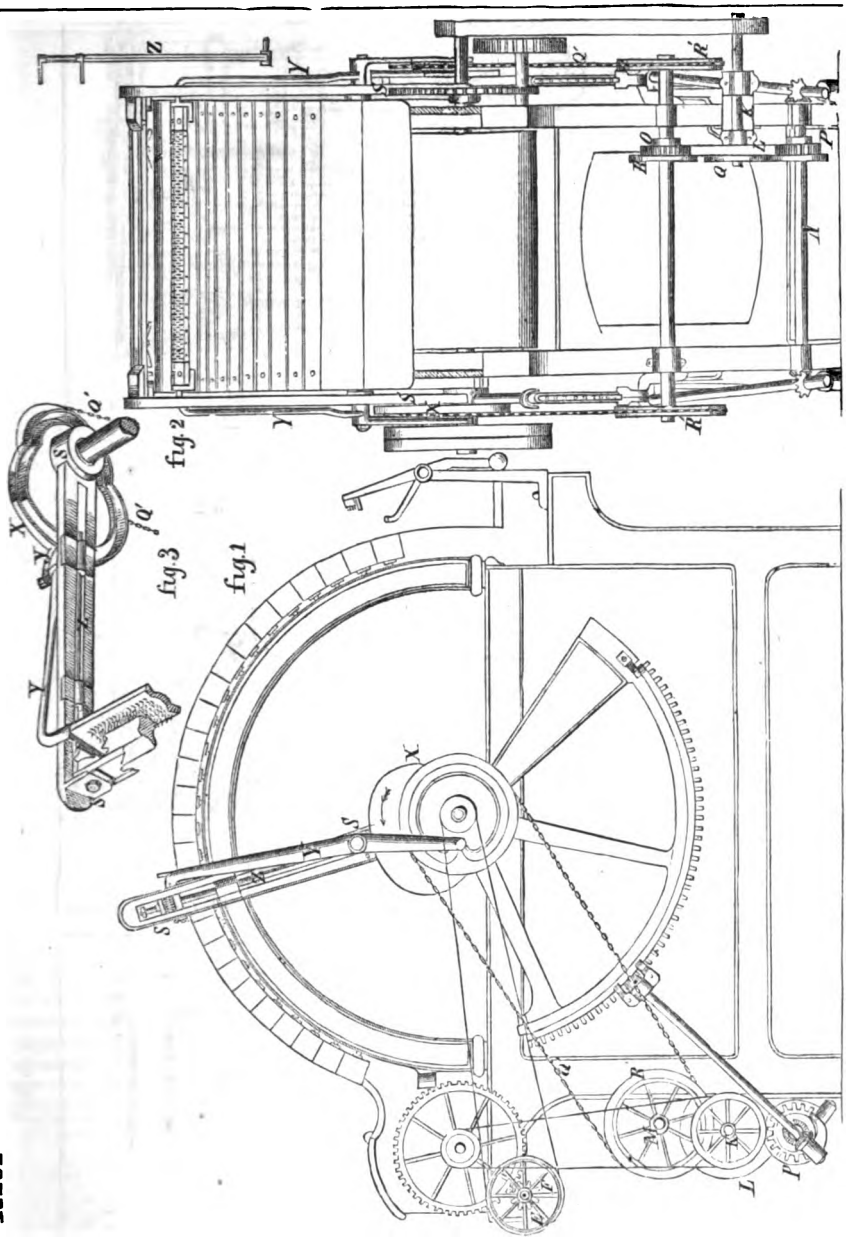

15872

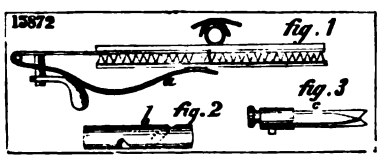

15886

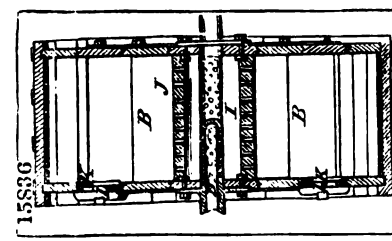

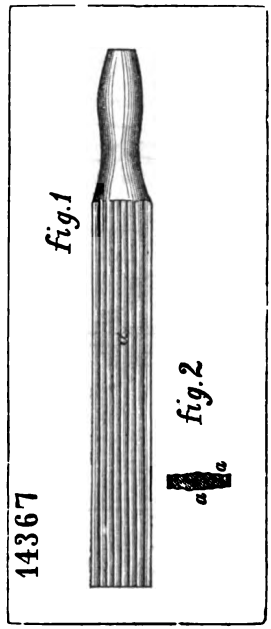

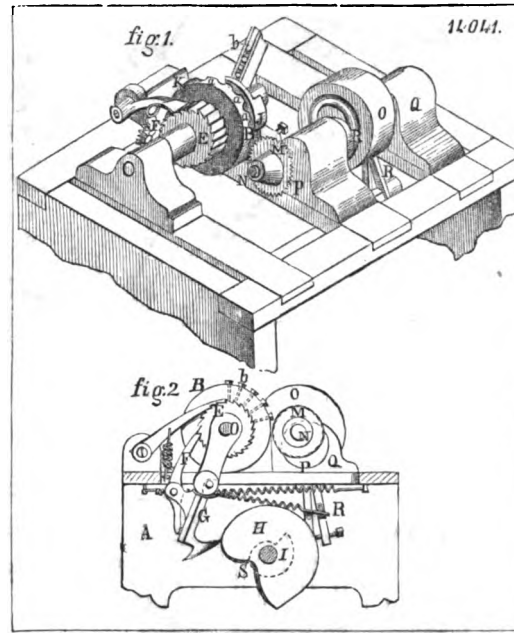

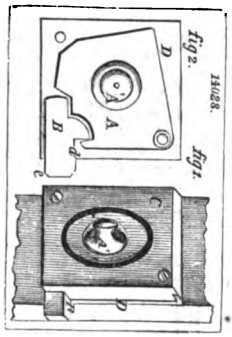

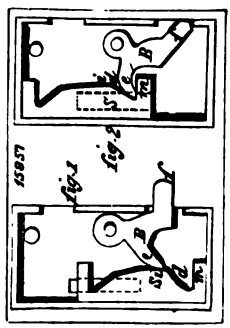

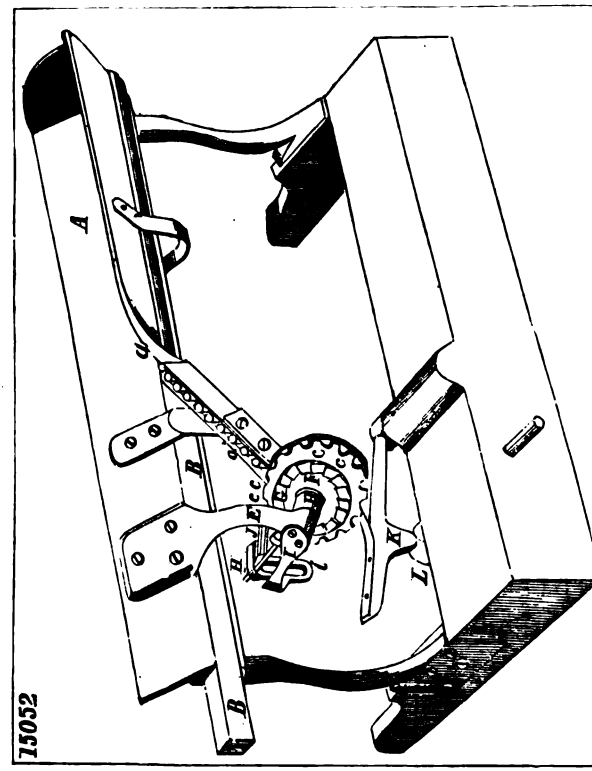

Digitized by Google

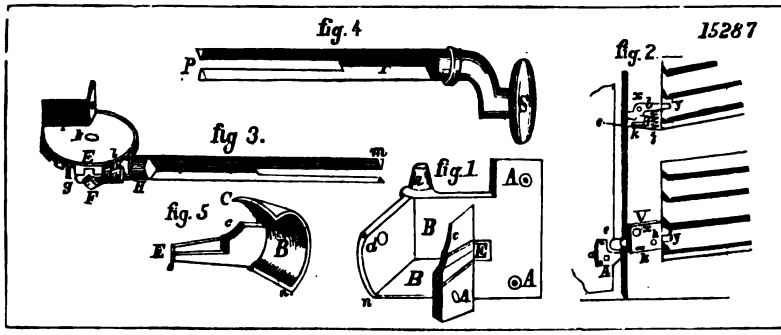

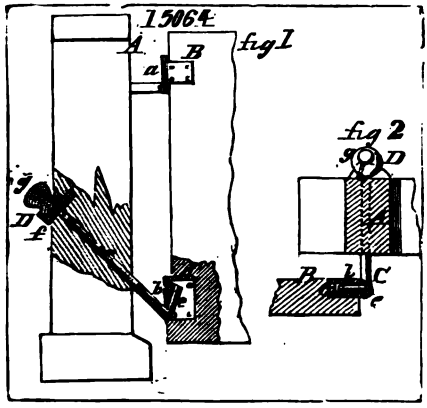

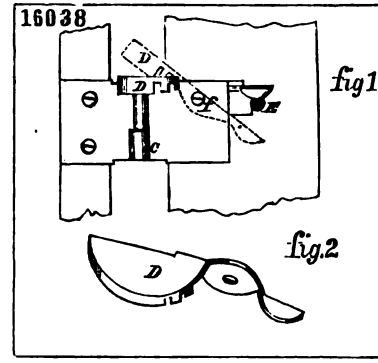

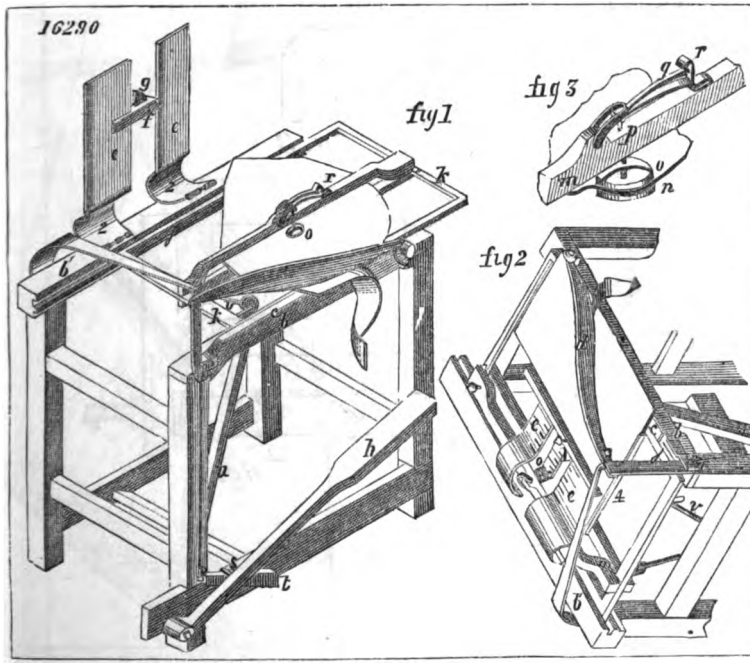

Digitized by Google

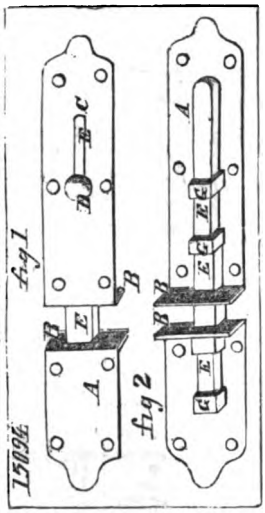

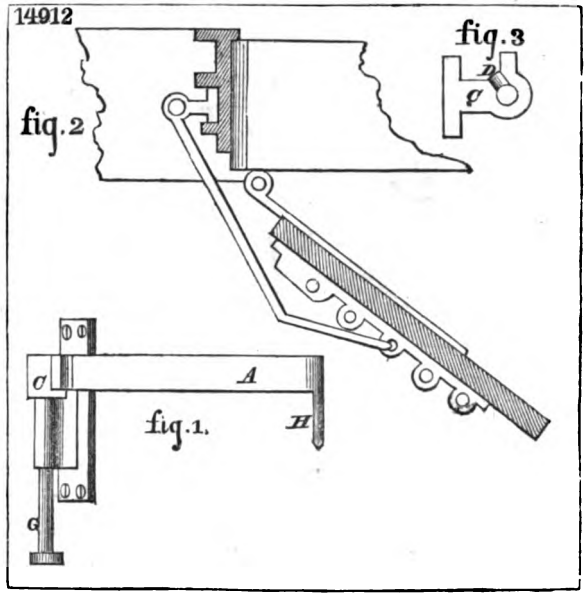

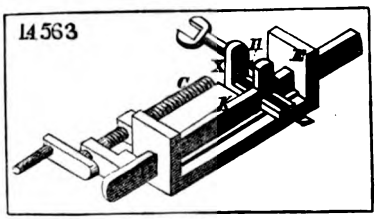

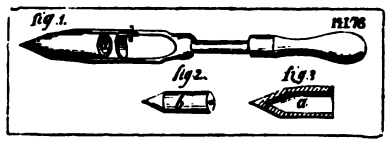

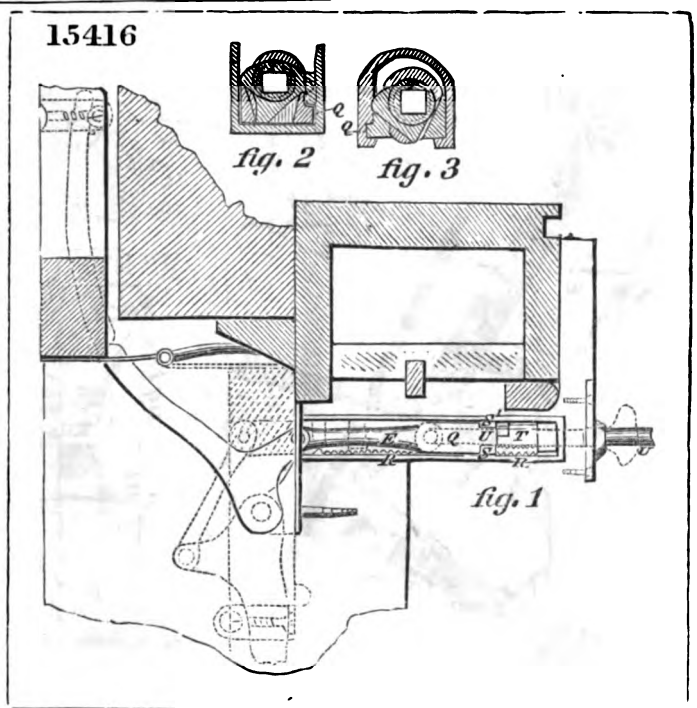

Digitized by Google

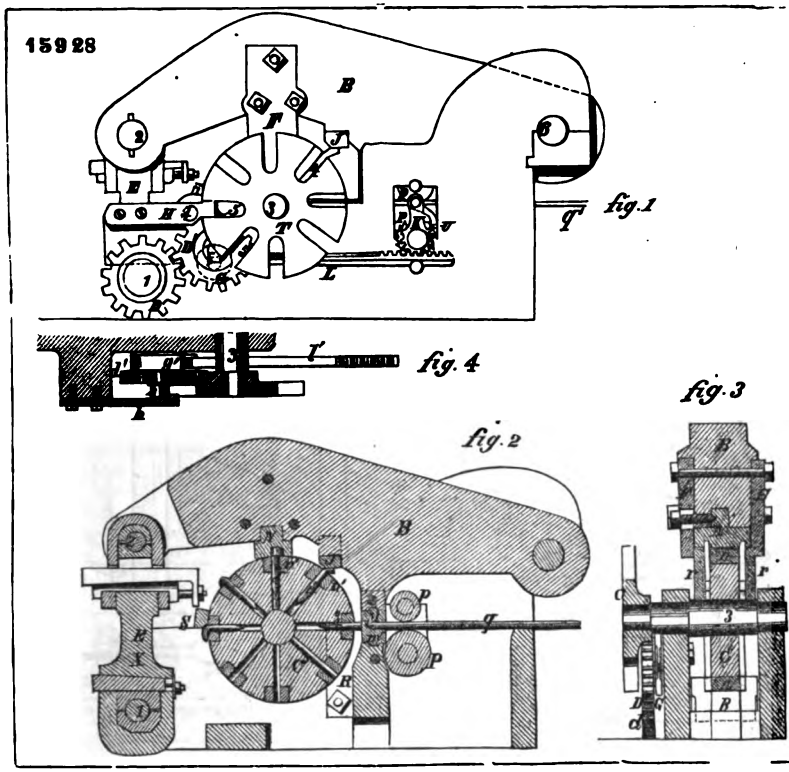

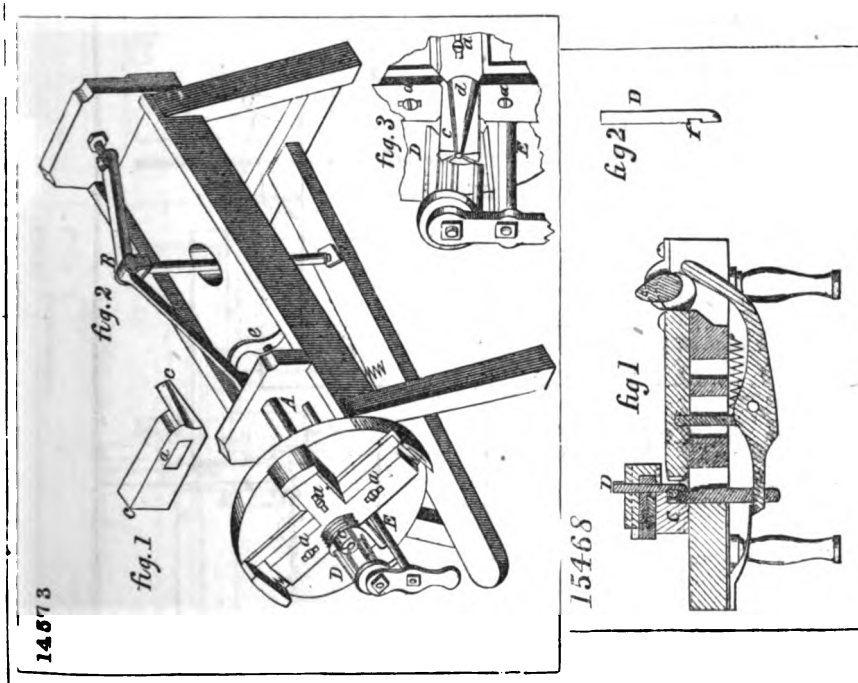

Digitized by Google

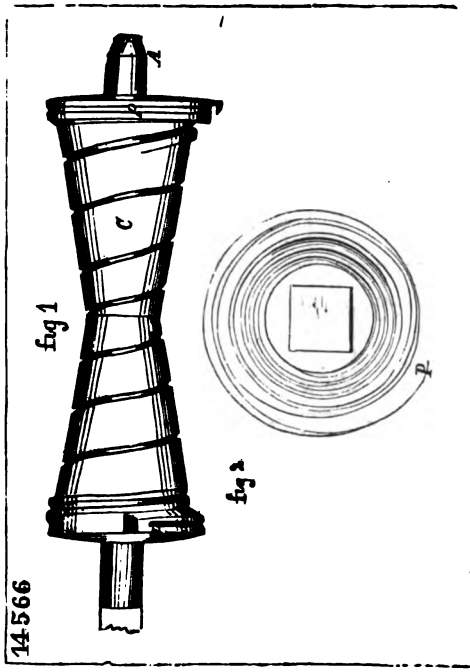

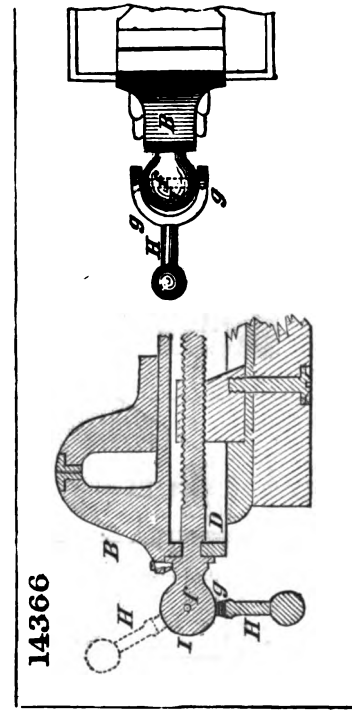

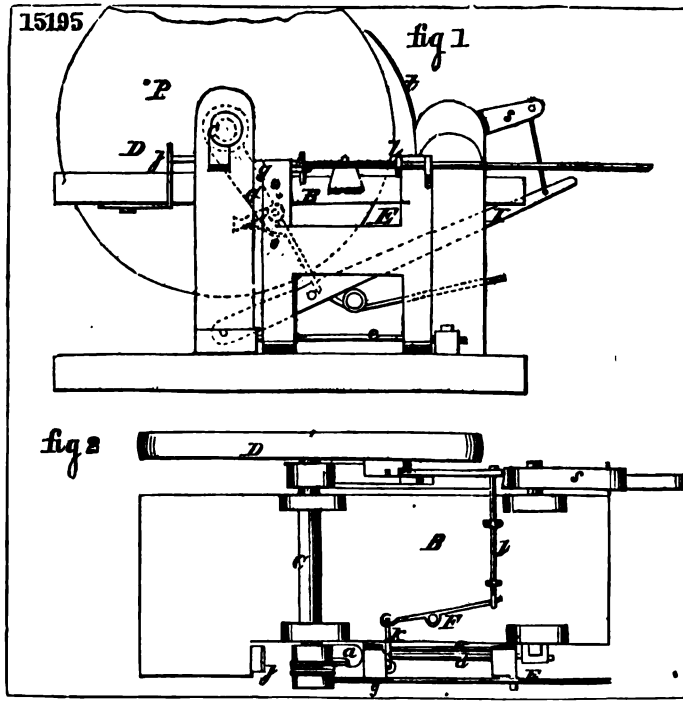

Digitized by Google

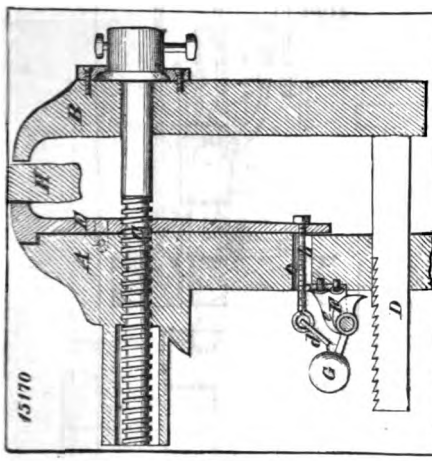

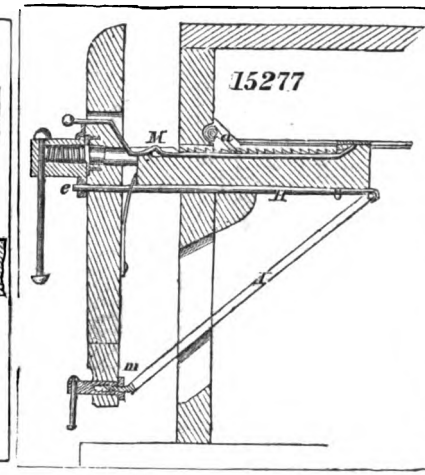

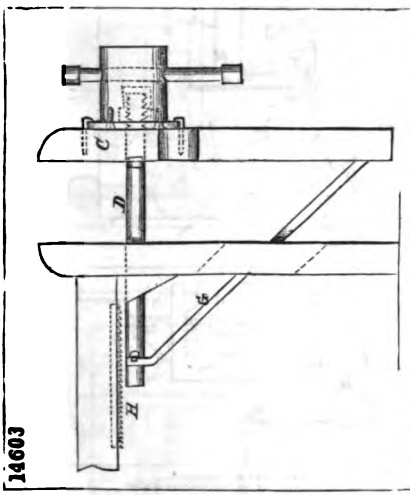

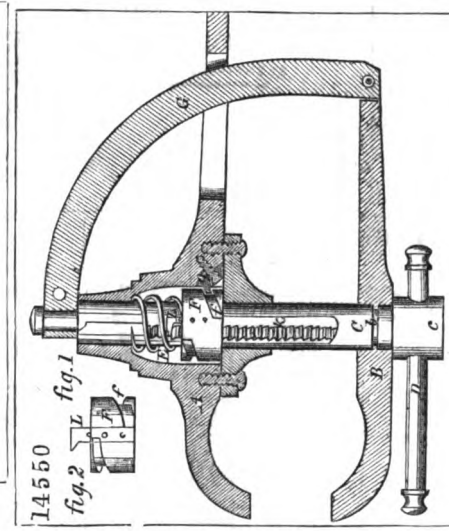

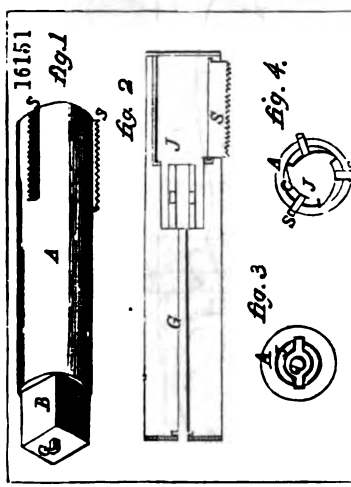

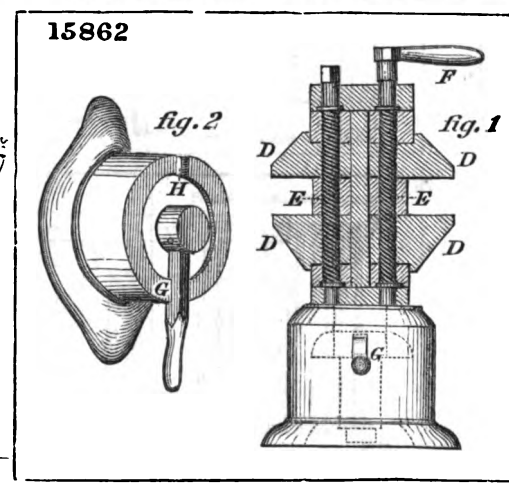

Digitized by Google

16252

fig.4

fig.1

fig.s 3

fig.2

15051

14792

16213

14795

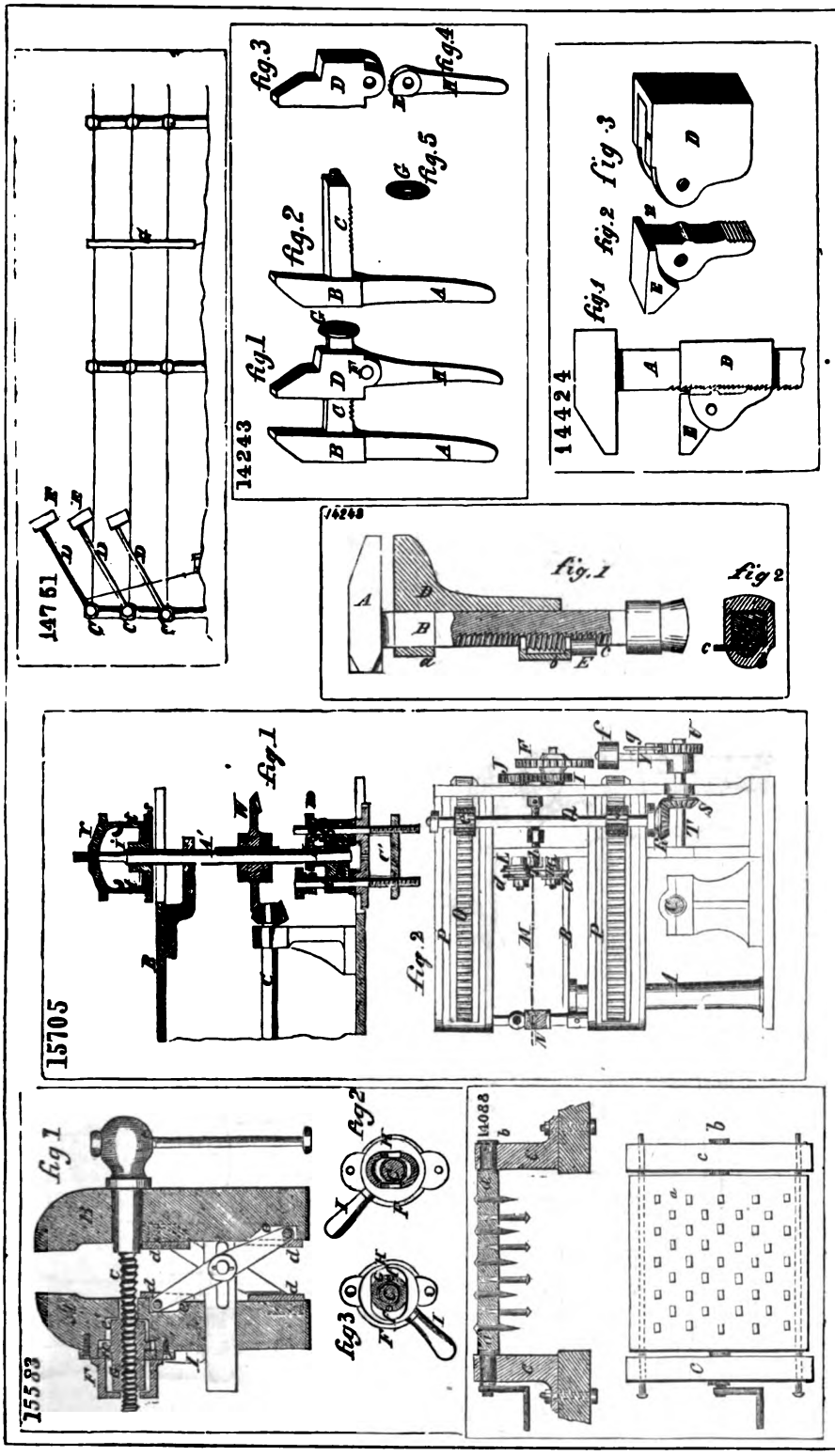

Digitized by Google

14546

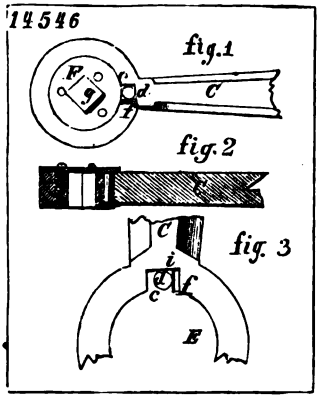

15482

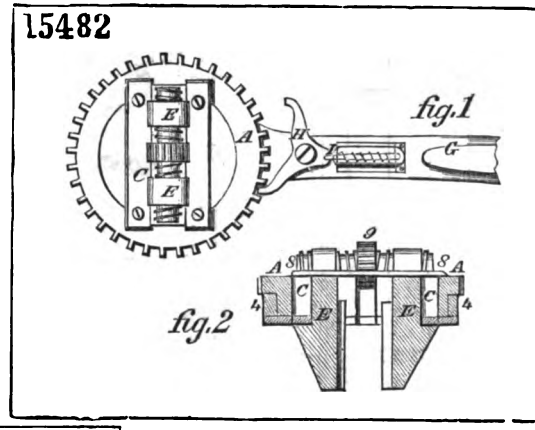

14571

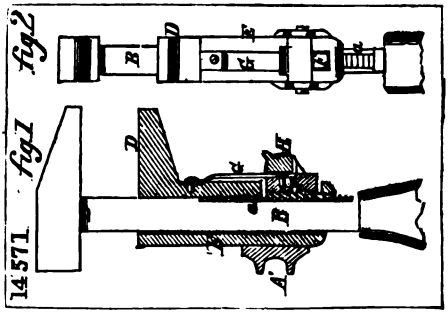

16158

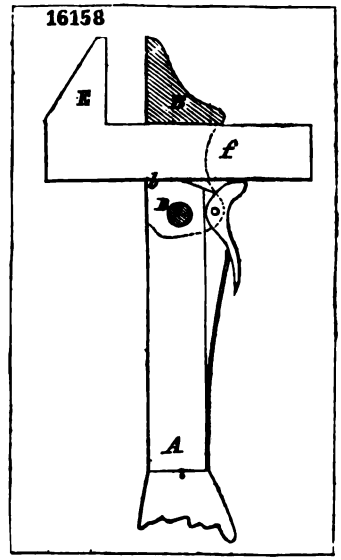

14779.

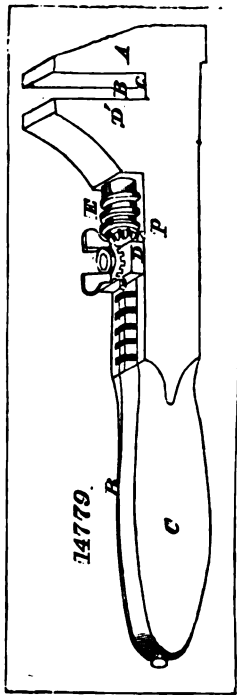

14221

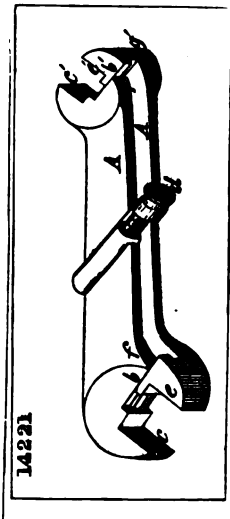

14528

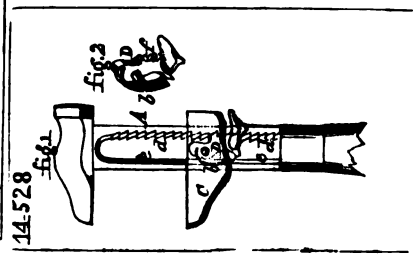

15184

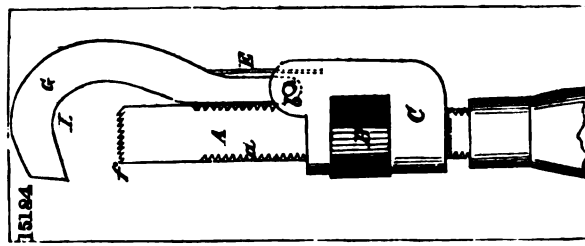

Digitized by Google

1619

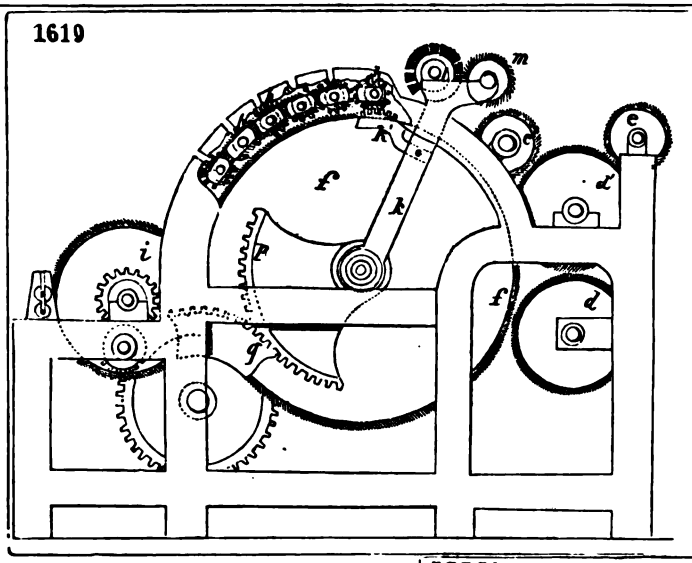

14322

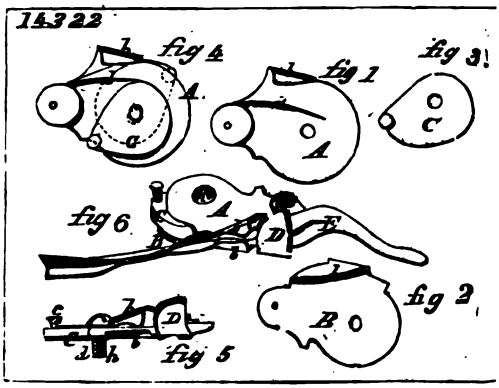

15784

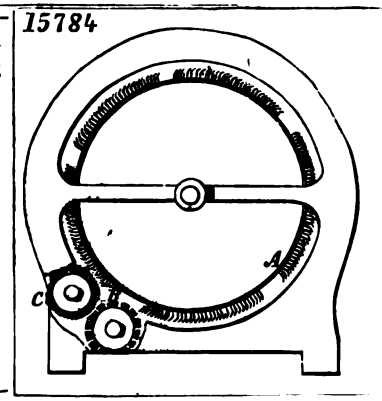

14585

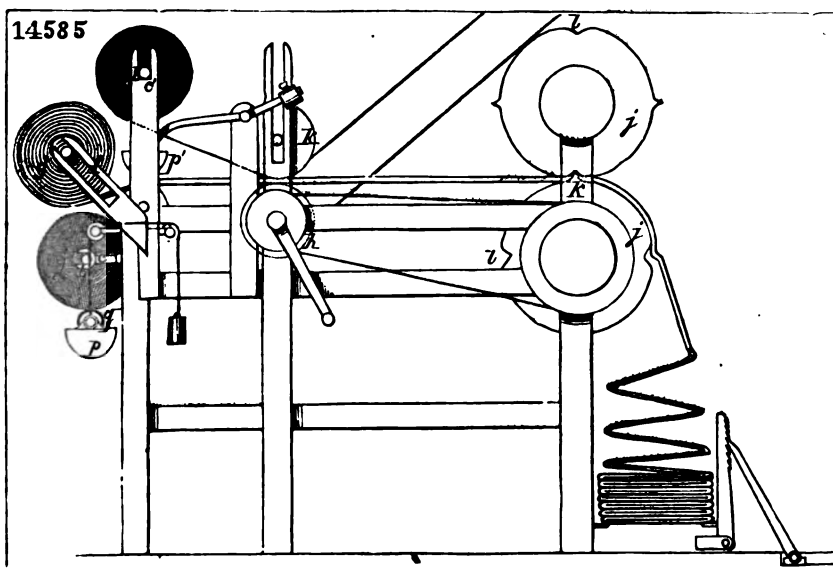

Digitized by Google

15313

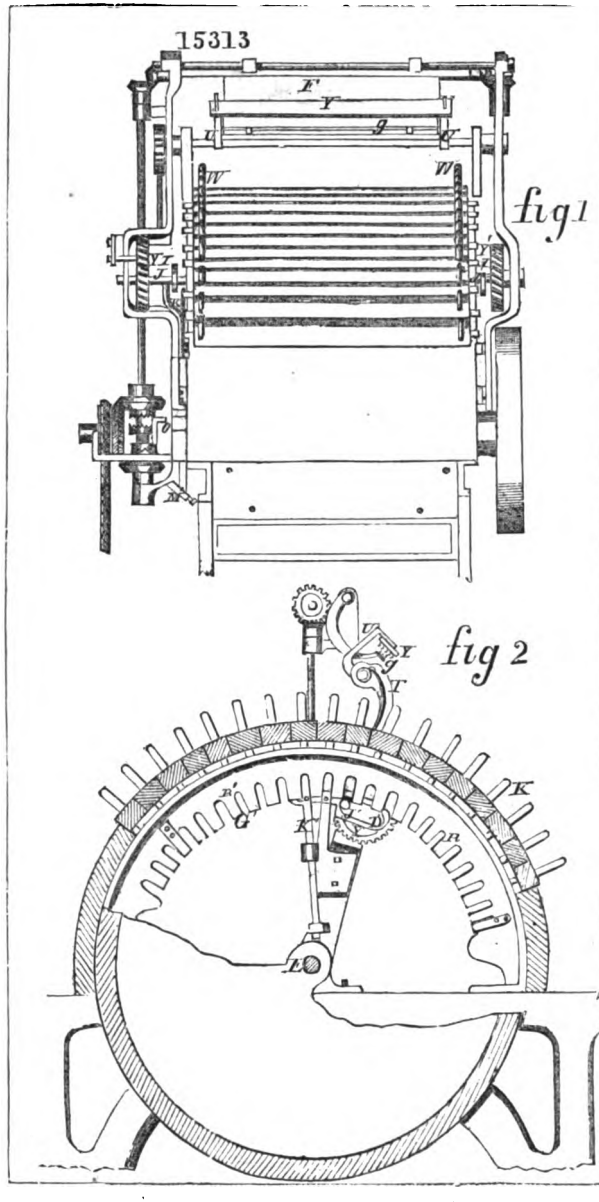

16319

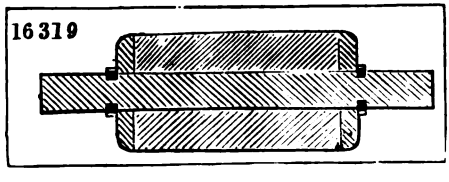

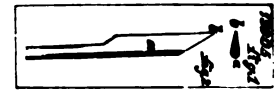

Digitized by Google

14481

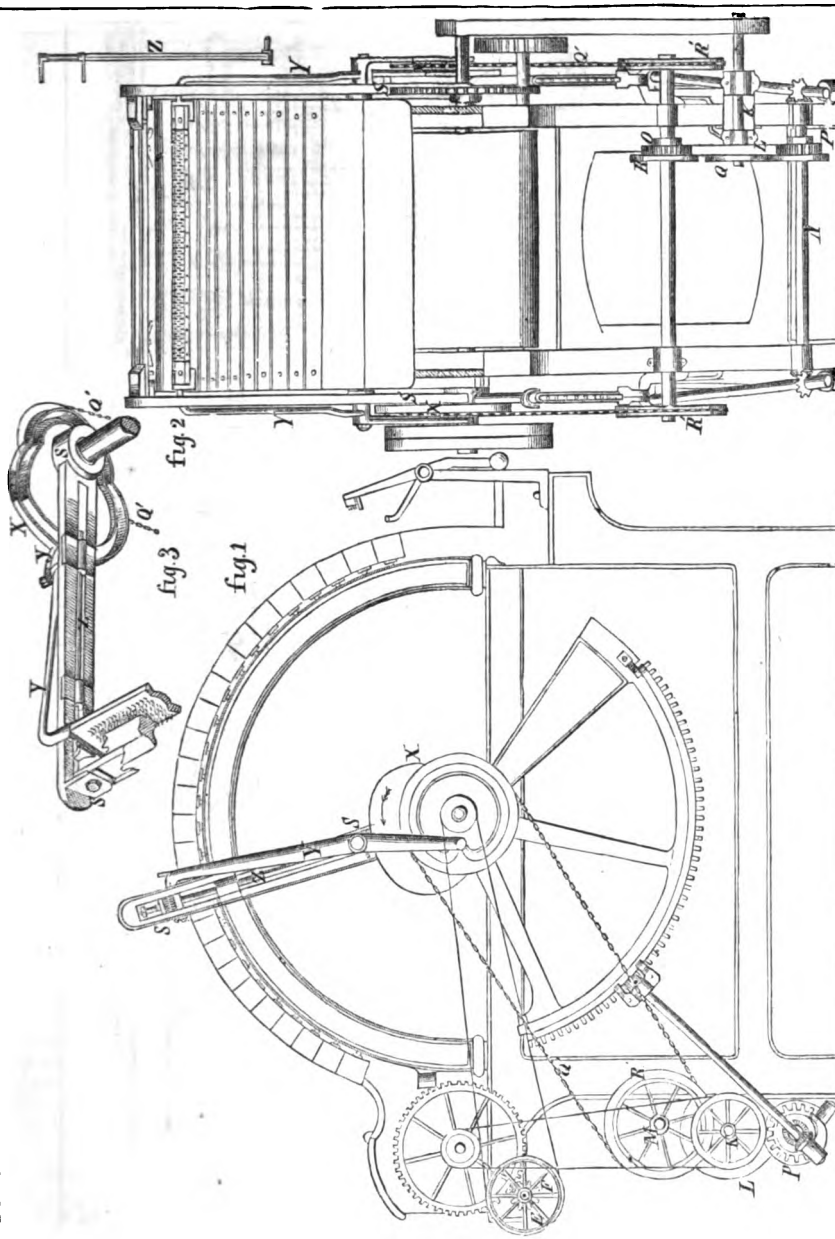

15872

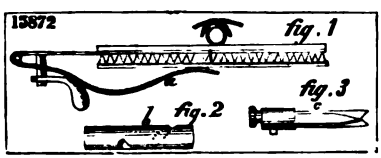

15836

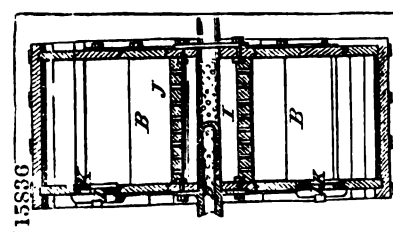

Digitized by Google

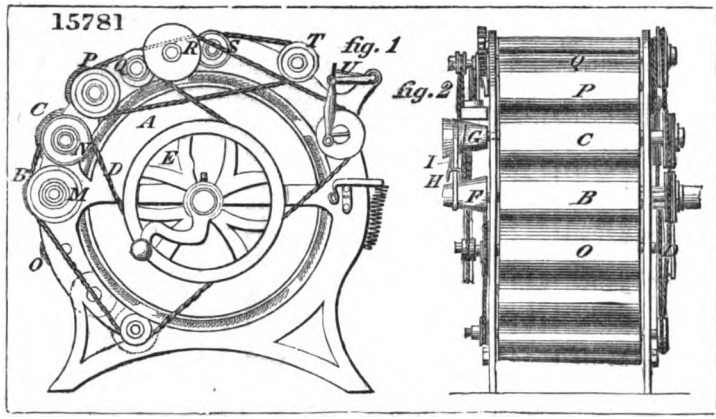

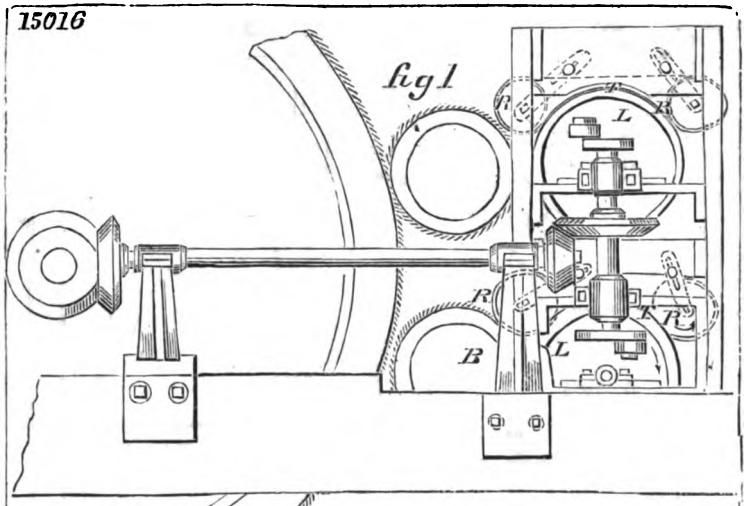

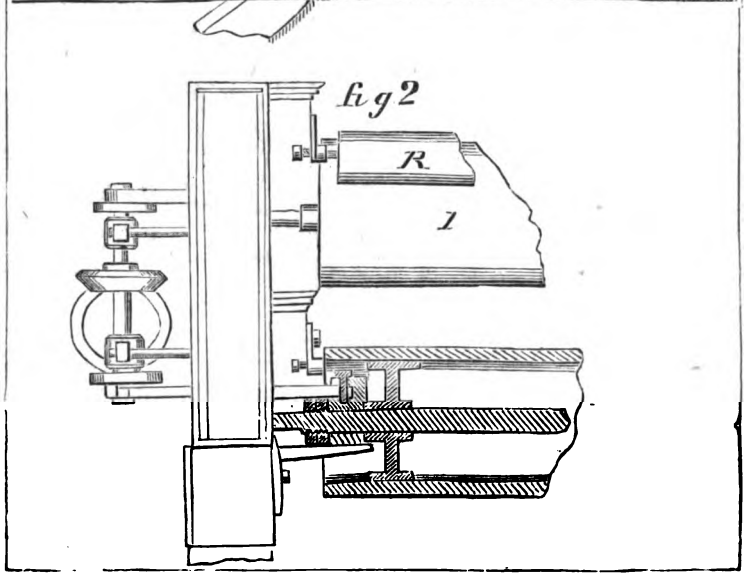

Digitized by Google

14725

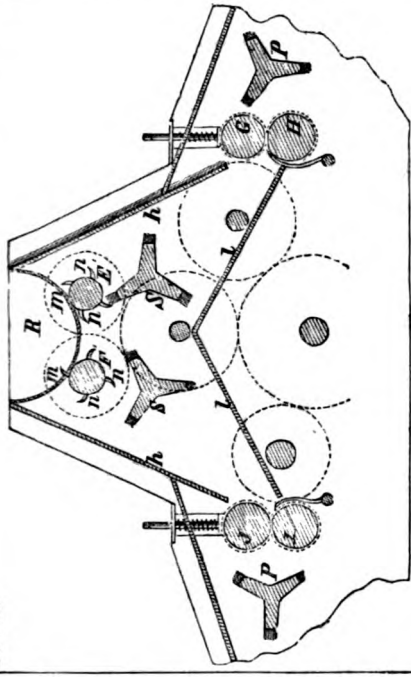

15904

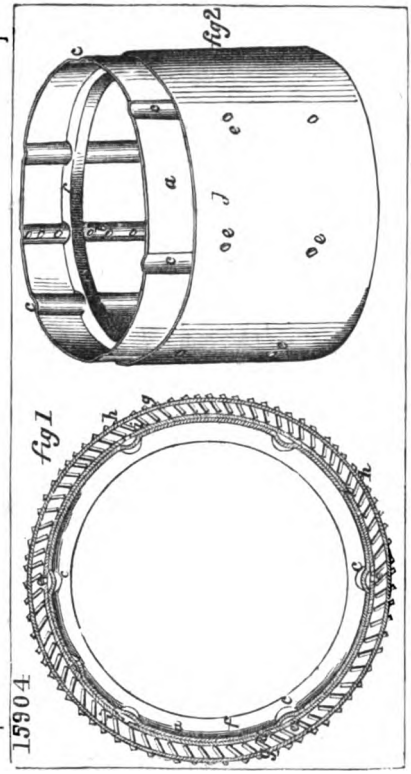

16149

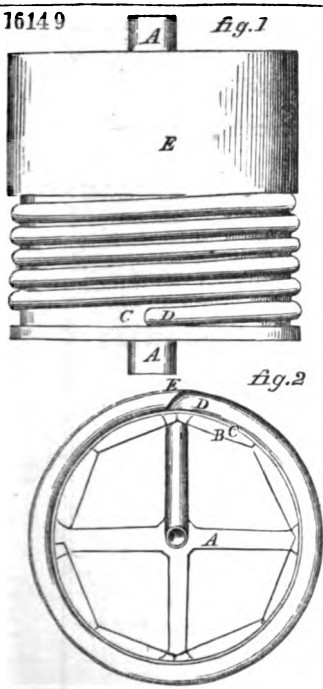

14965

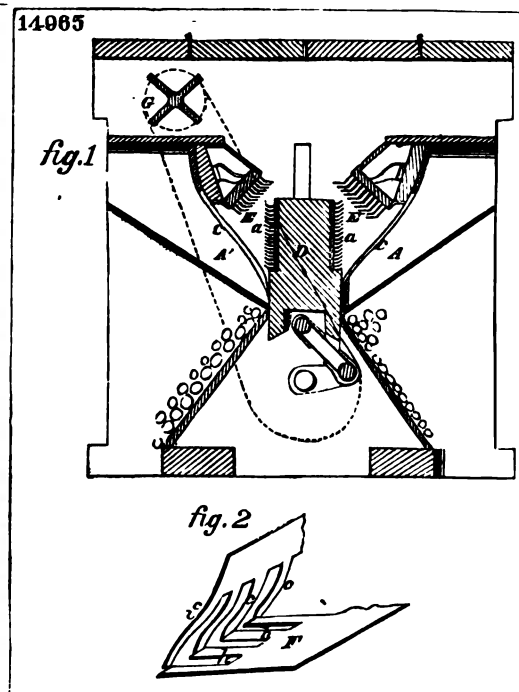

Digitized by Google

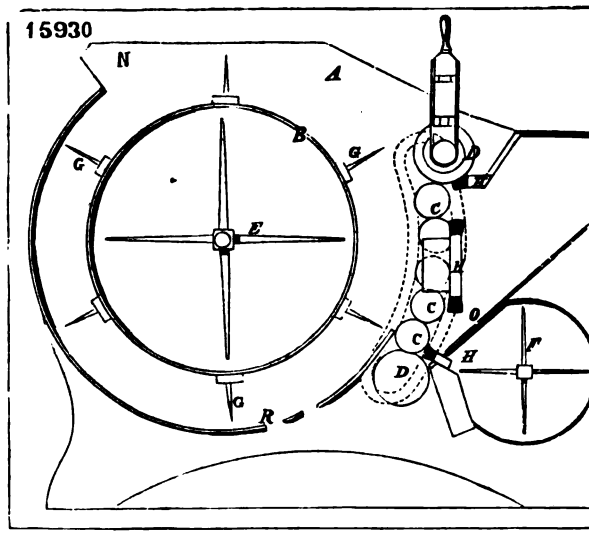

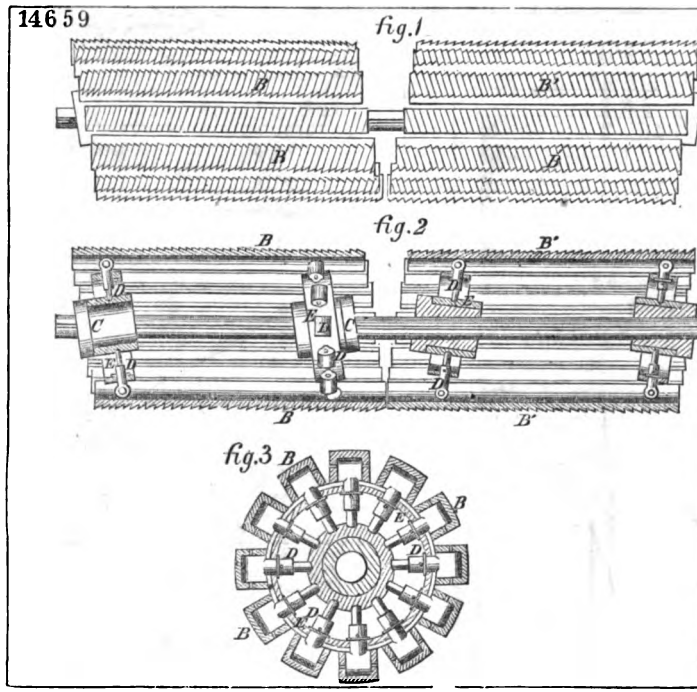

Digitized by Google

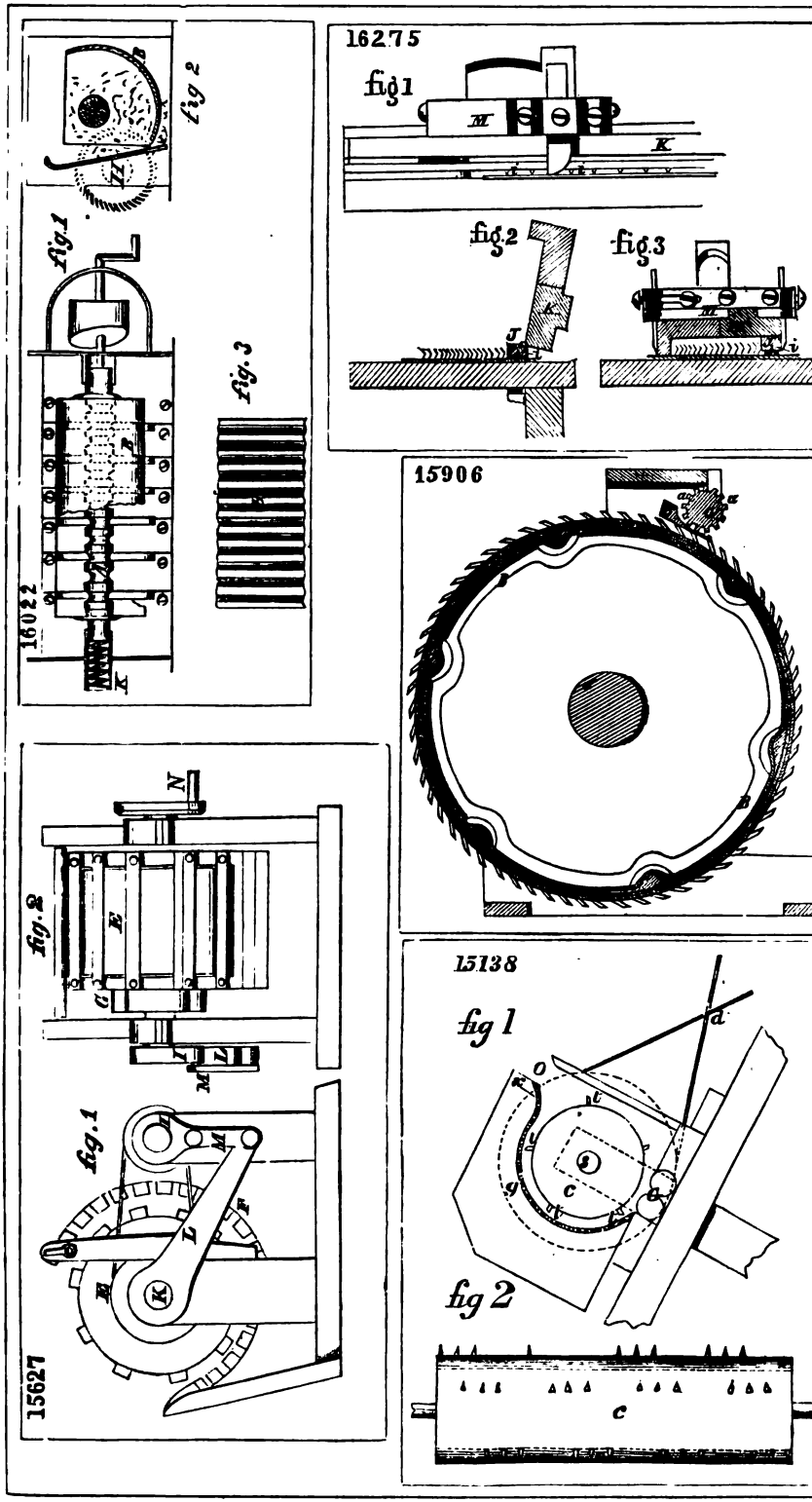

Digitized by Google

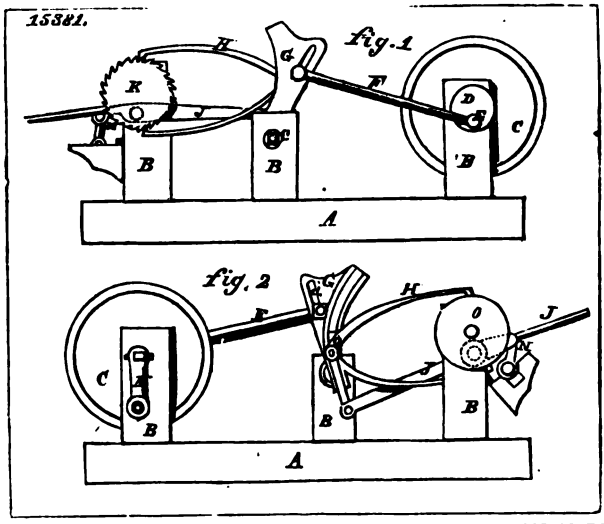

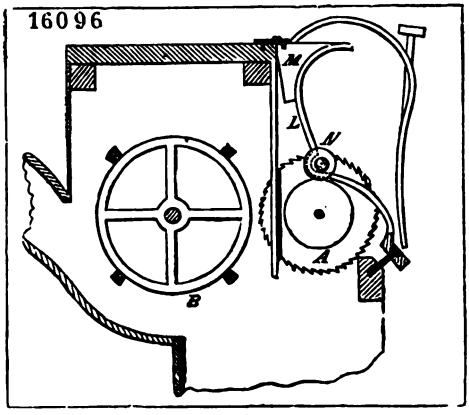

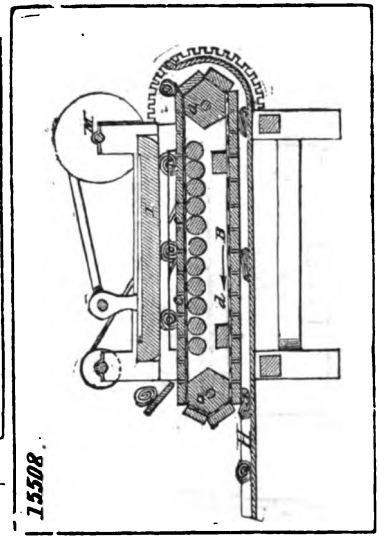

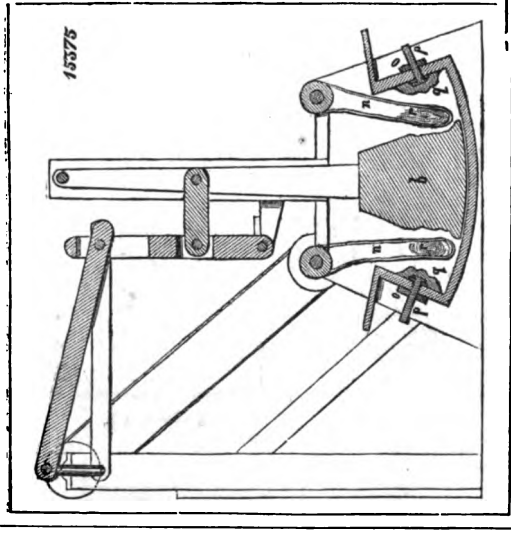

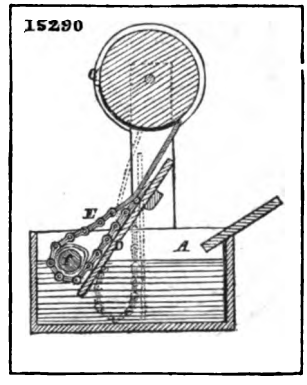

Digitized by Google

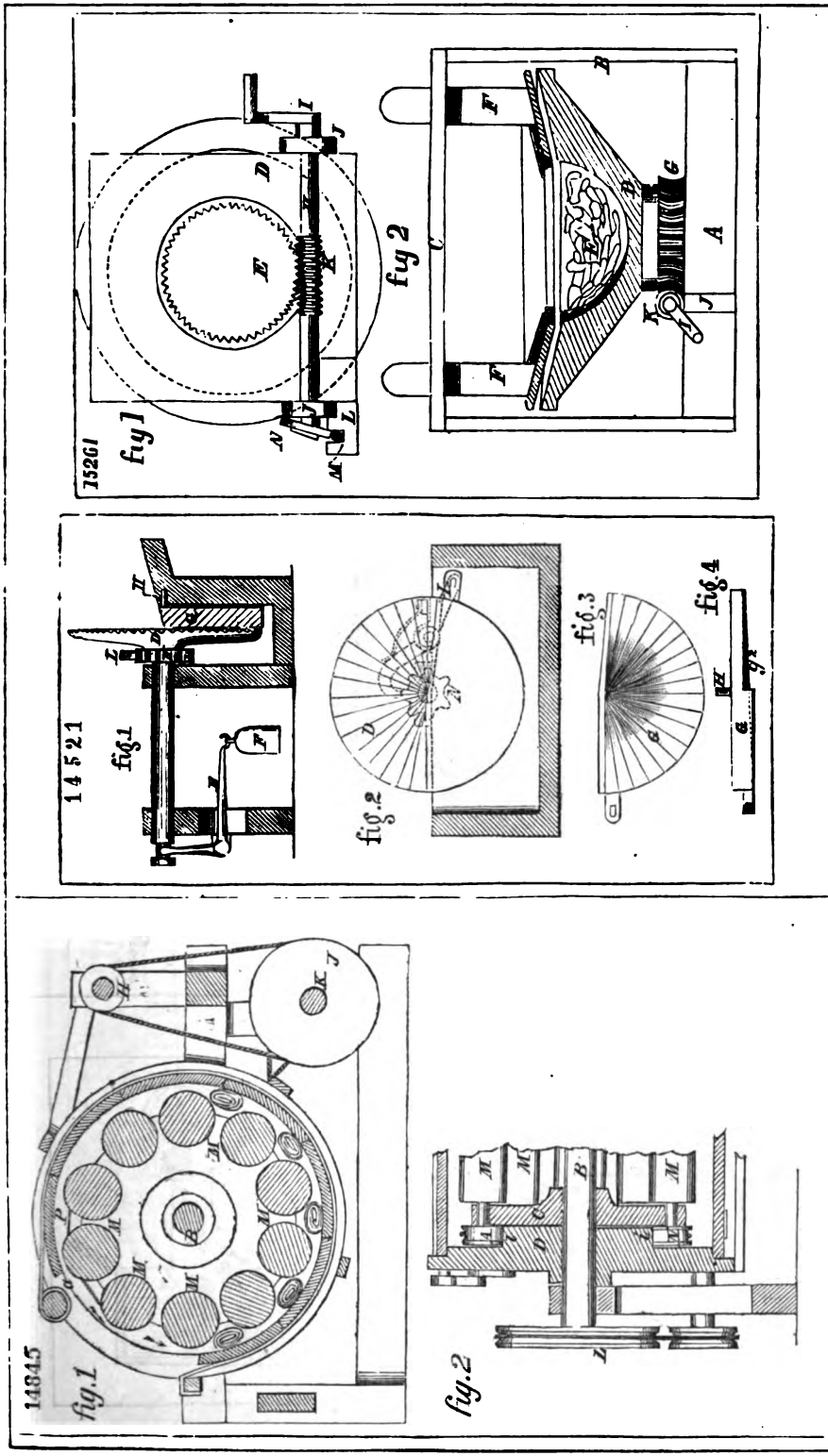

Digitized by Google

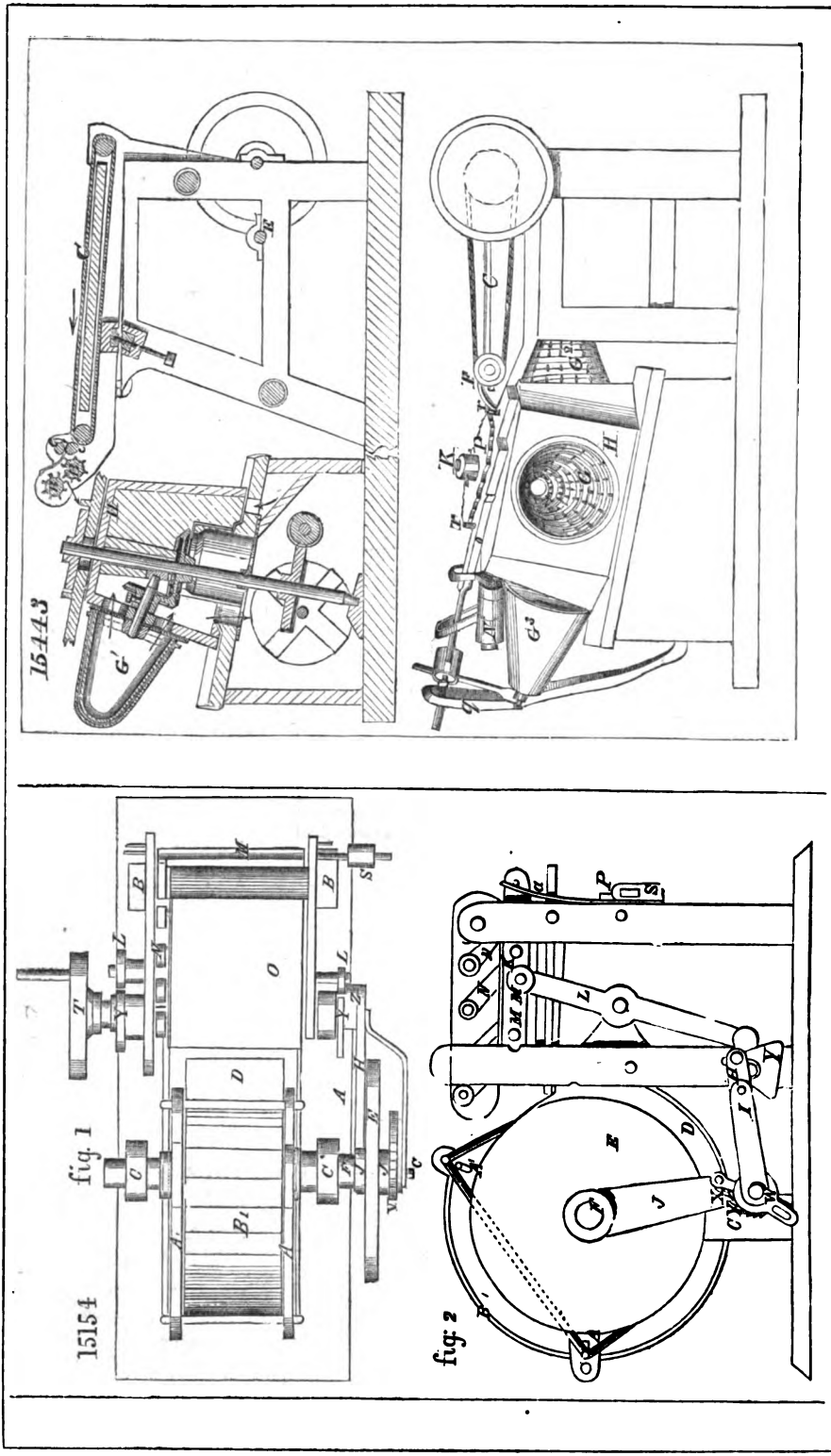

Digitized by Google

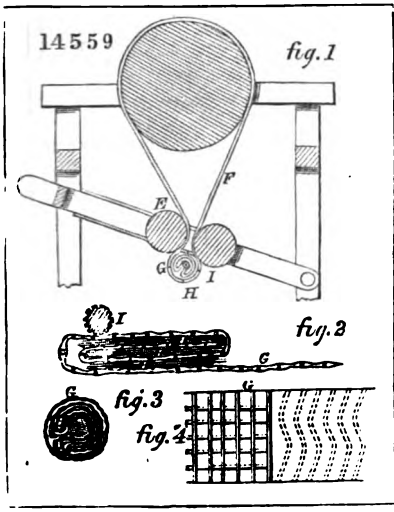

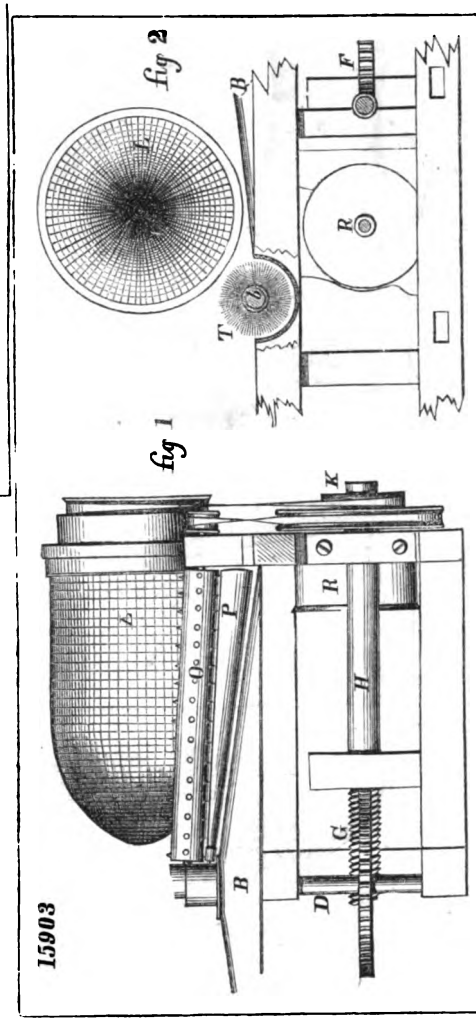

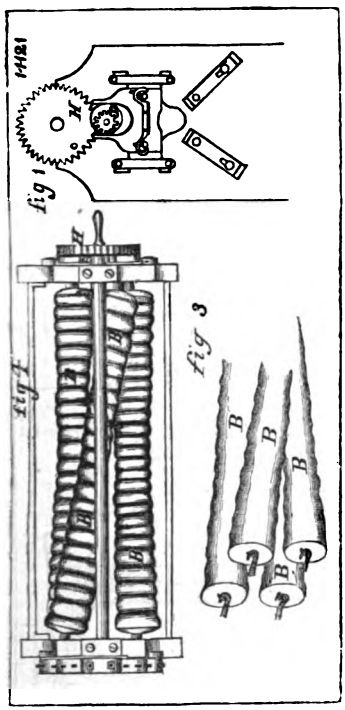

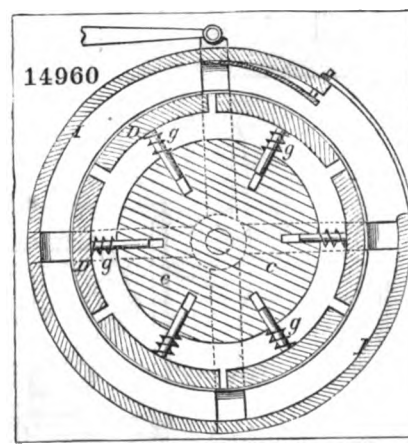

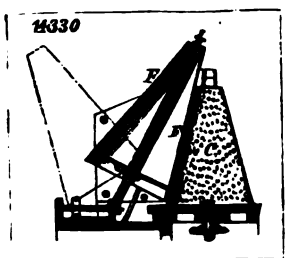

Digitized by Google

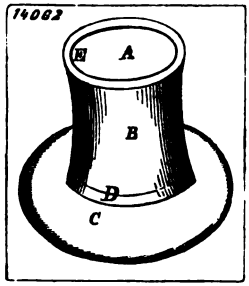

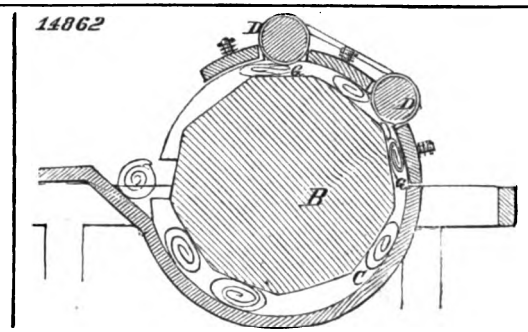

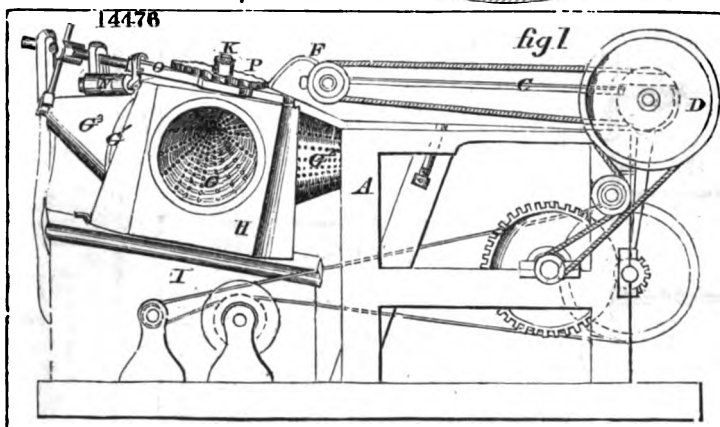

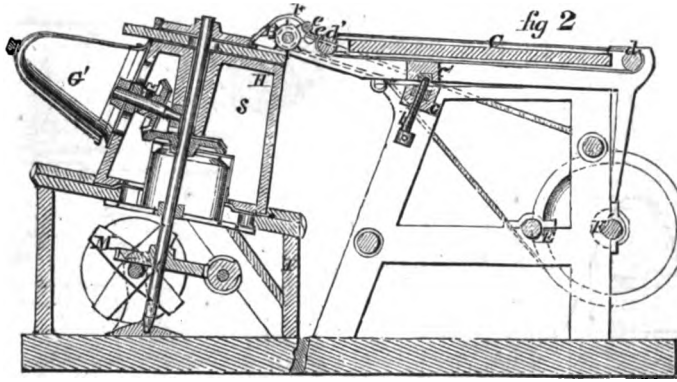

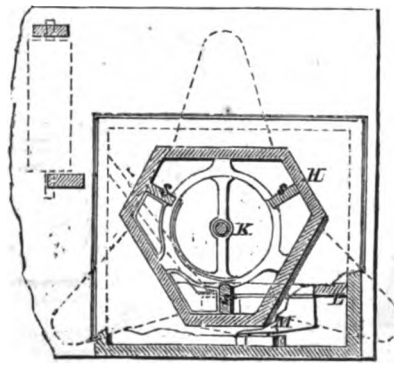

Digitized by Google

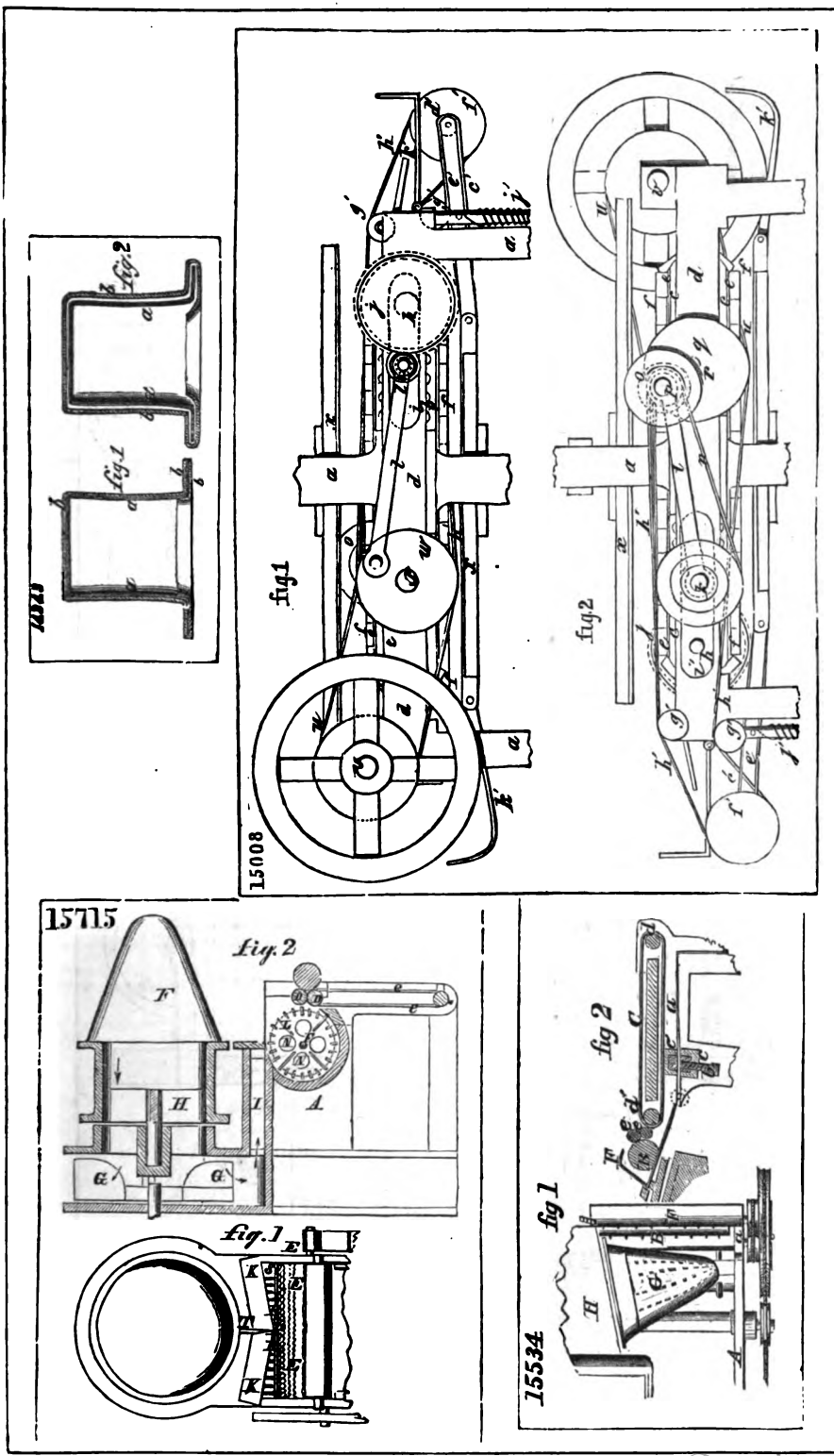

Digitized by Google

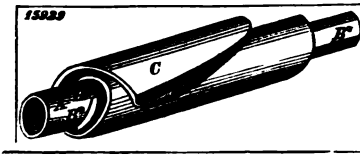

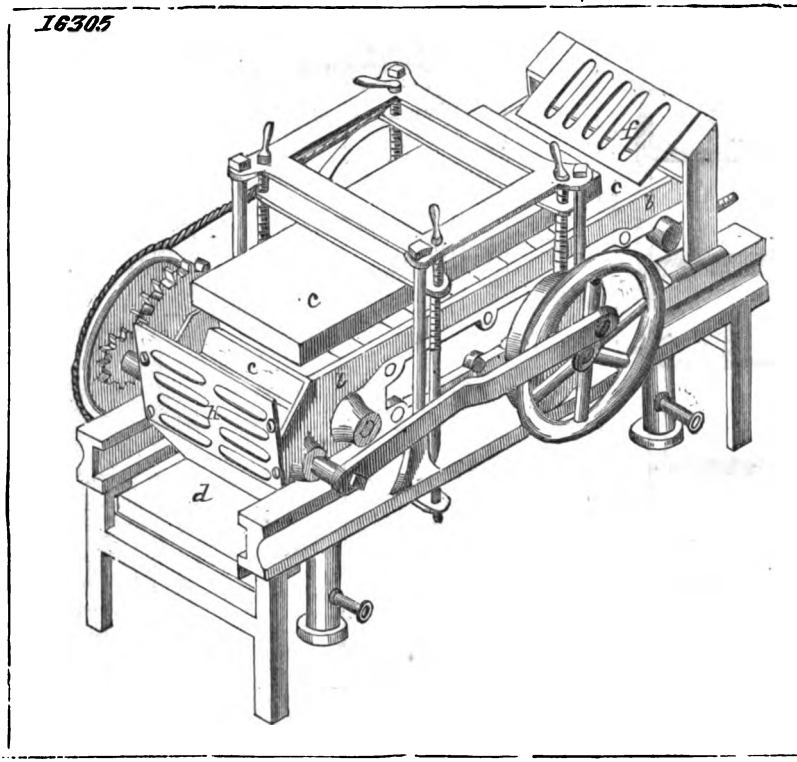

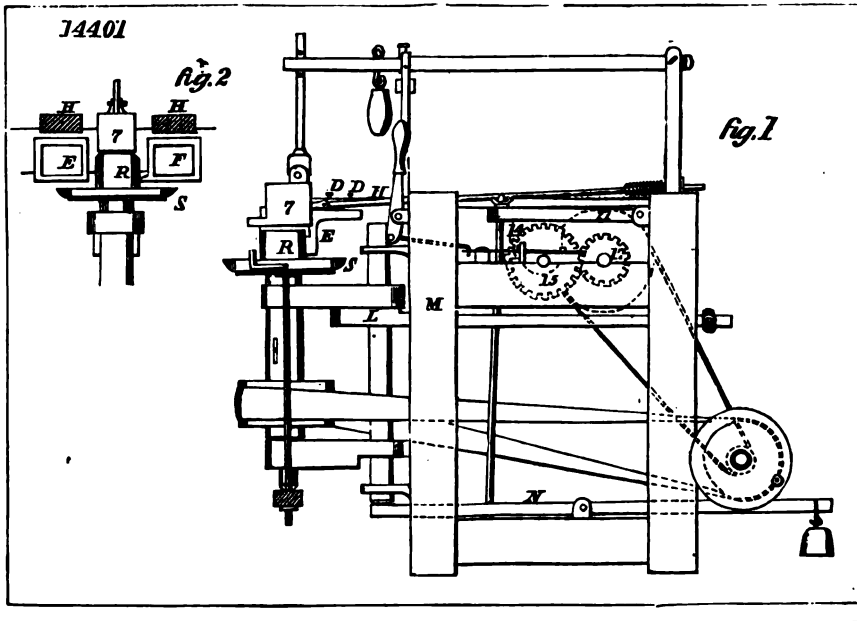

Digitized by Google

15484

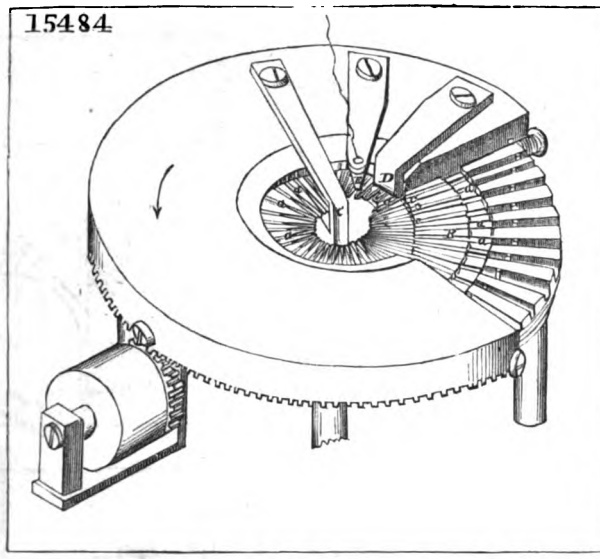

15166

fig 1

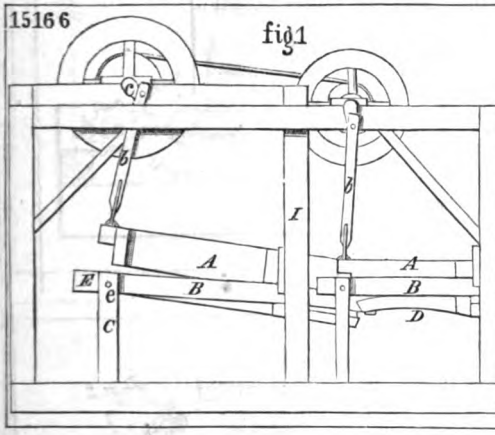

fig. 2

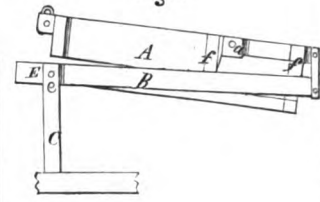

15498

fig. 1

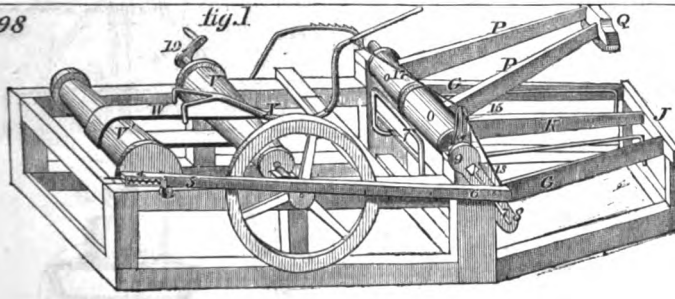

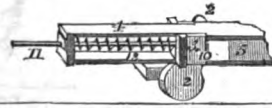

fig. 2

Digitized by Google

14394

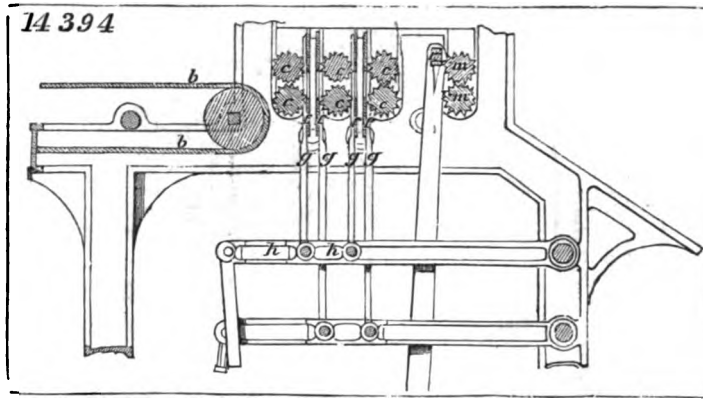

15607

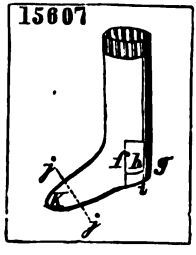

16279

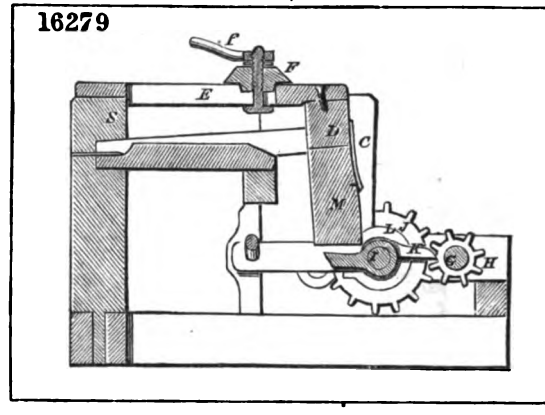

16285

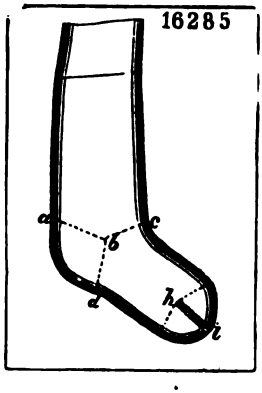

15314

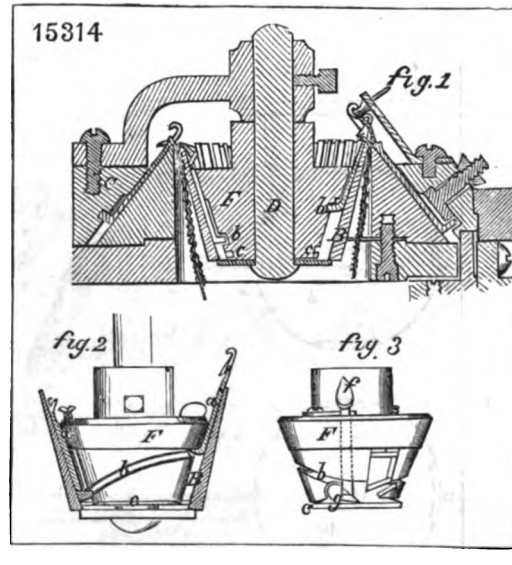

15006

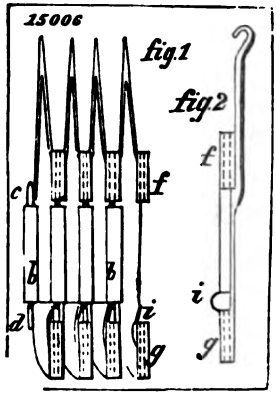

Digitized by Google

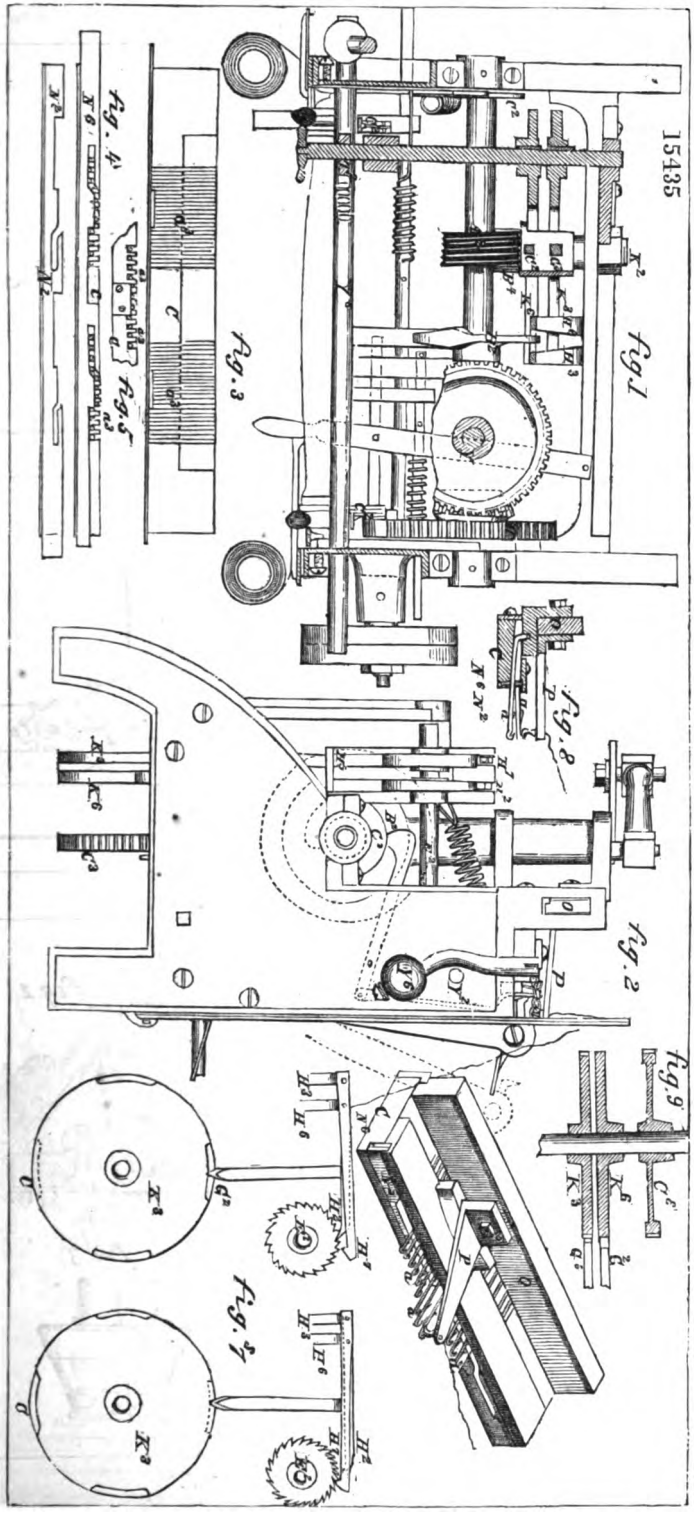

Digitized by Google

15492

Fig 1

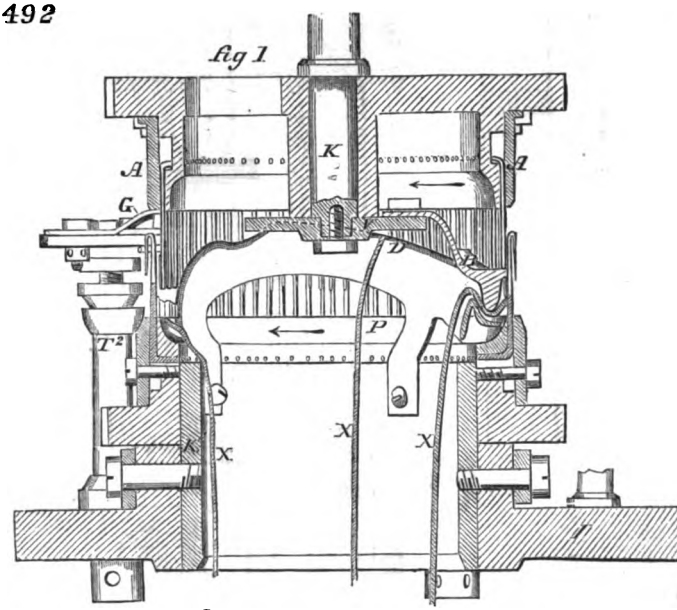

Fig 2

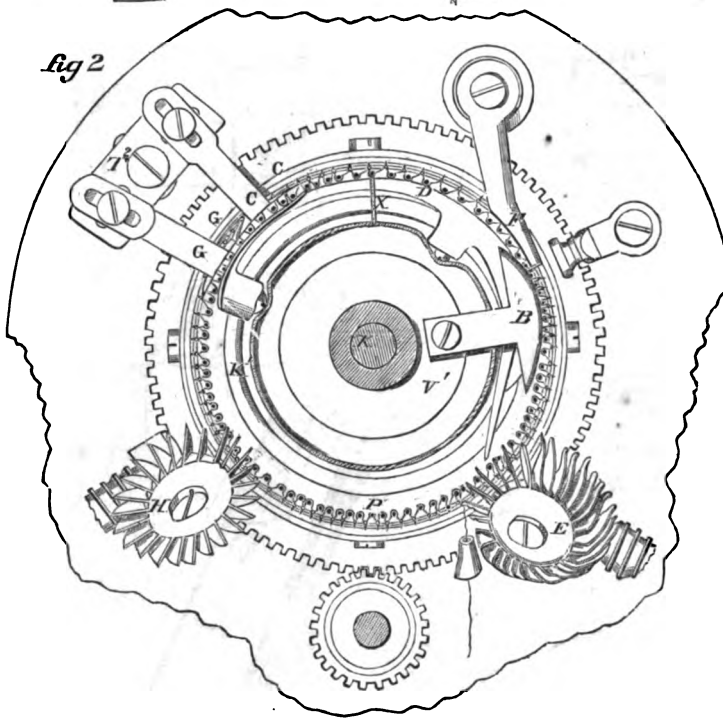

Digitized by Google

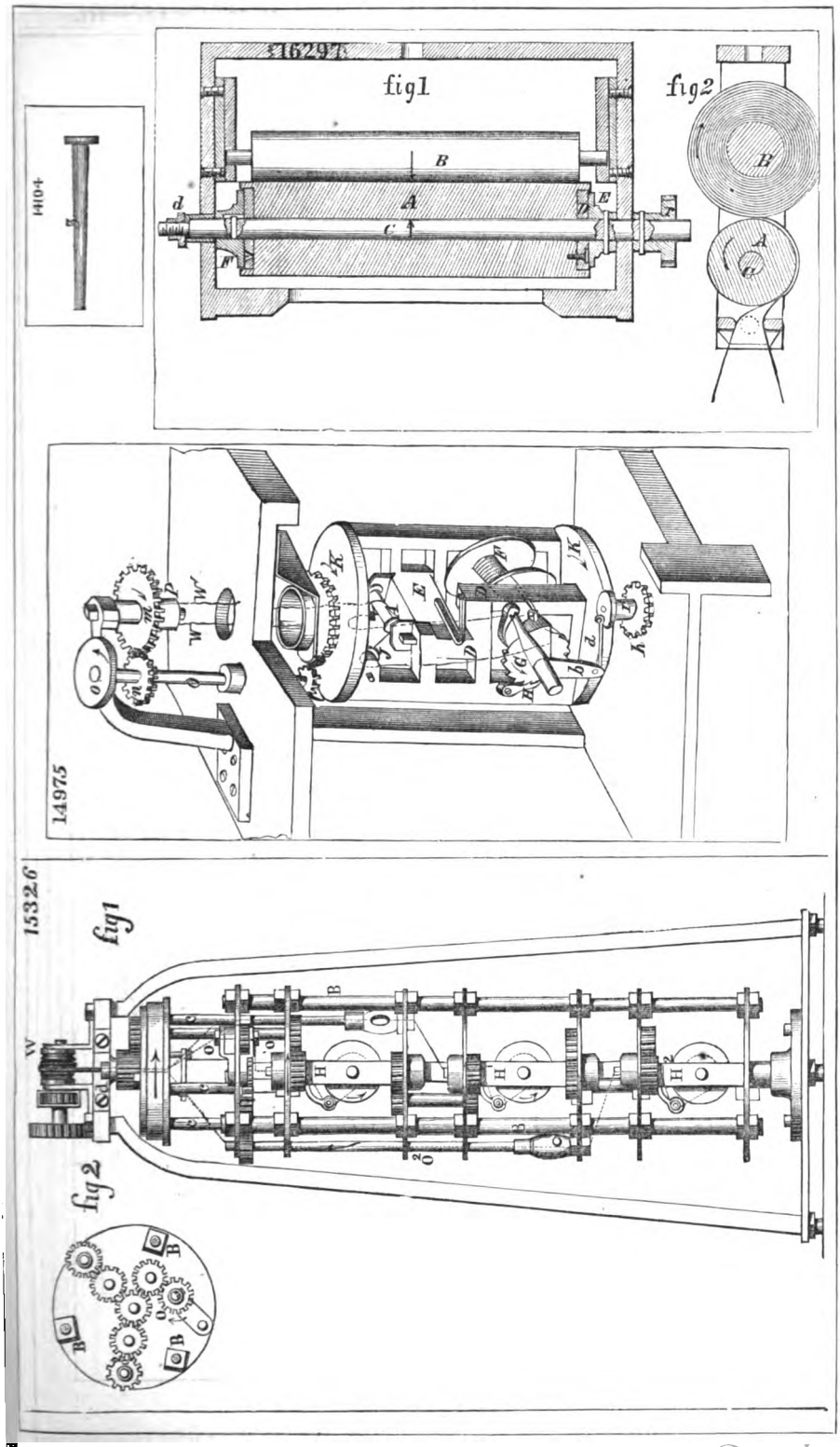

Digitized by Google

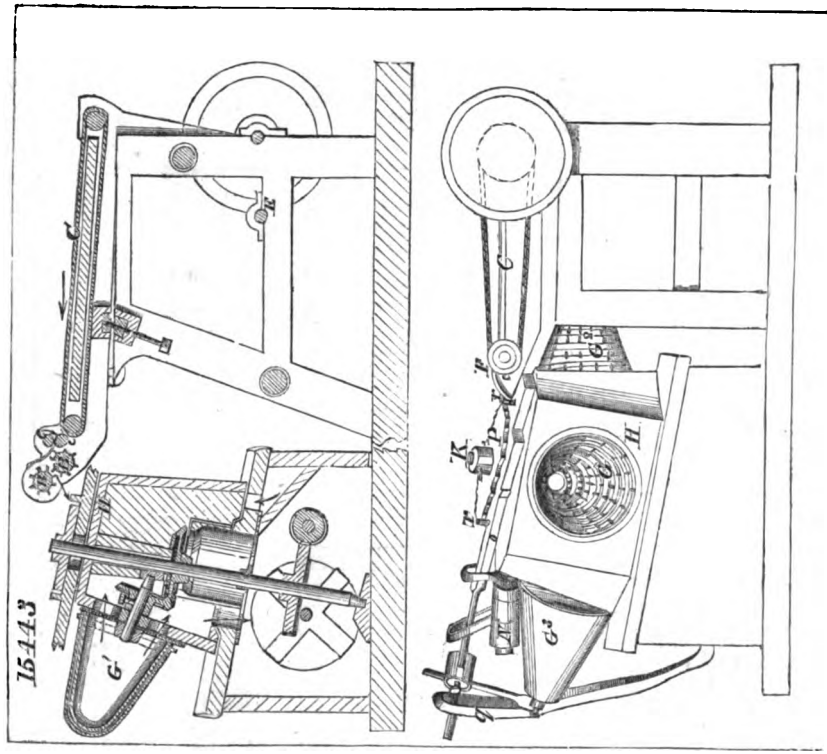

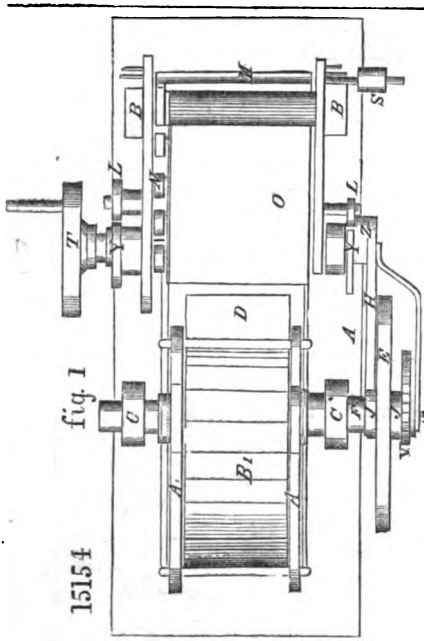

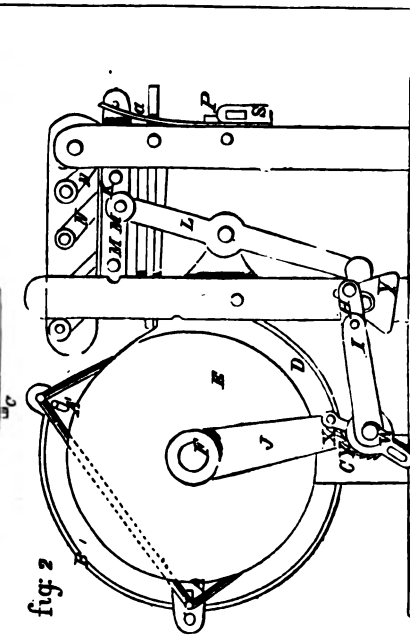

Digitized by Google

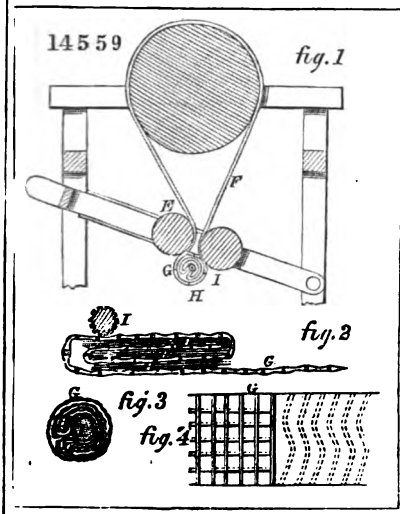

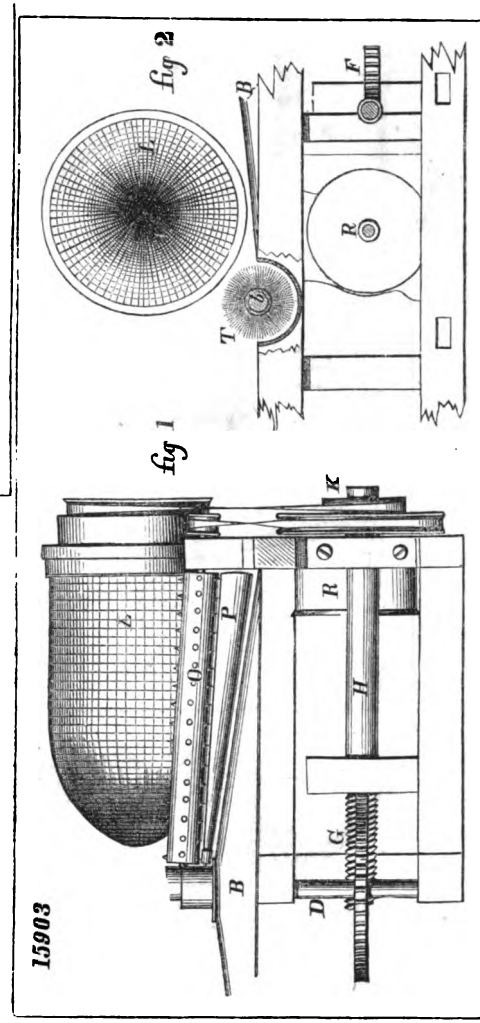

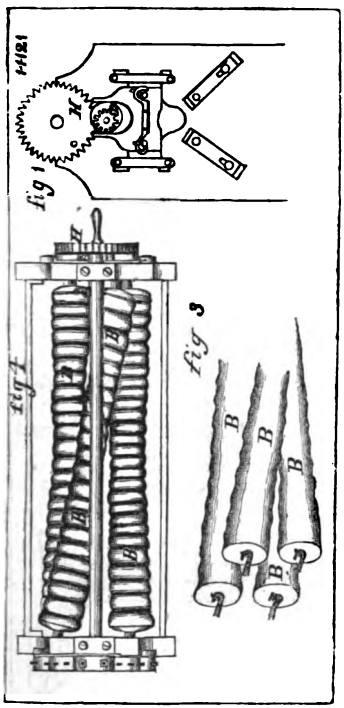

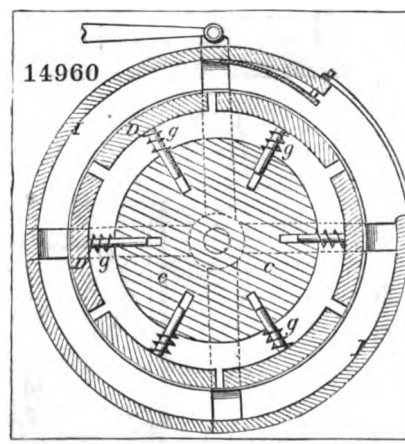

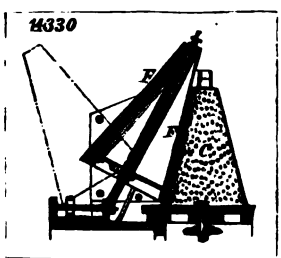

Digitized by Google

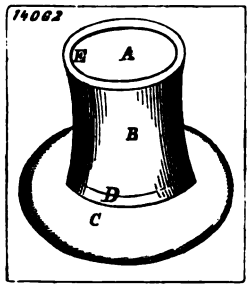

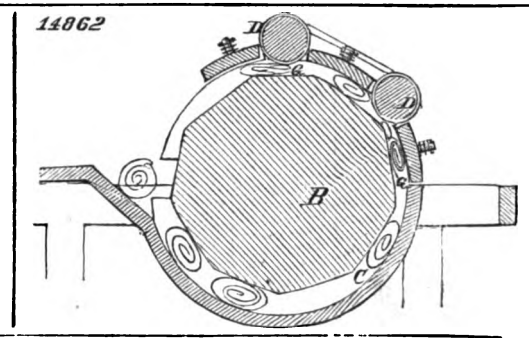

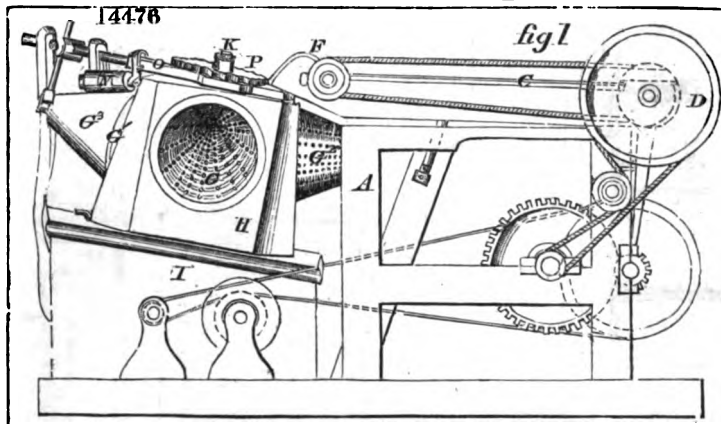

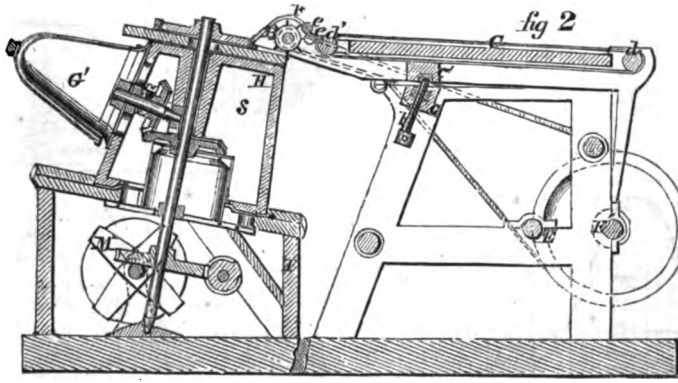

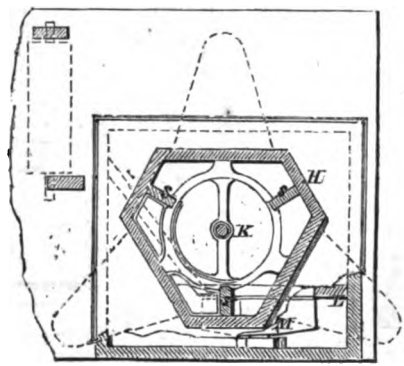

Digitized by Google

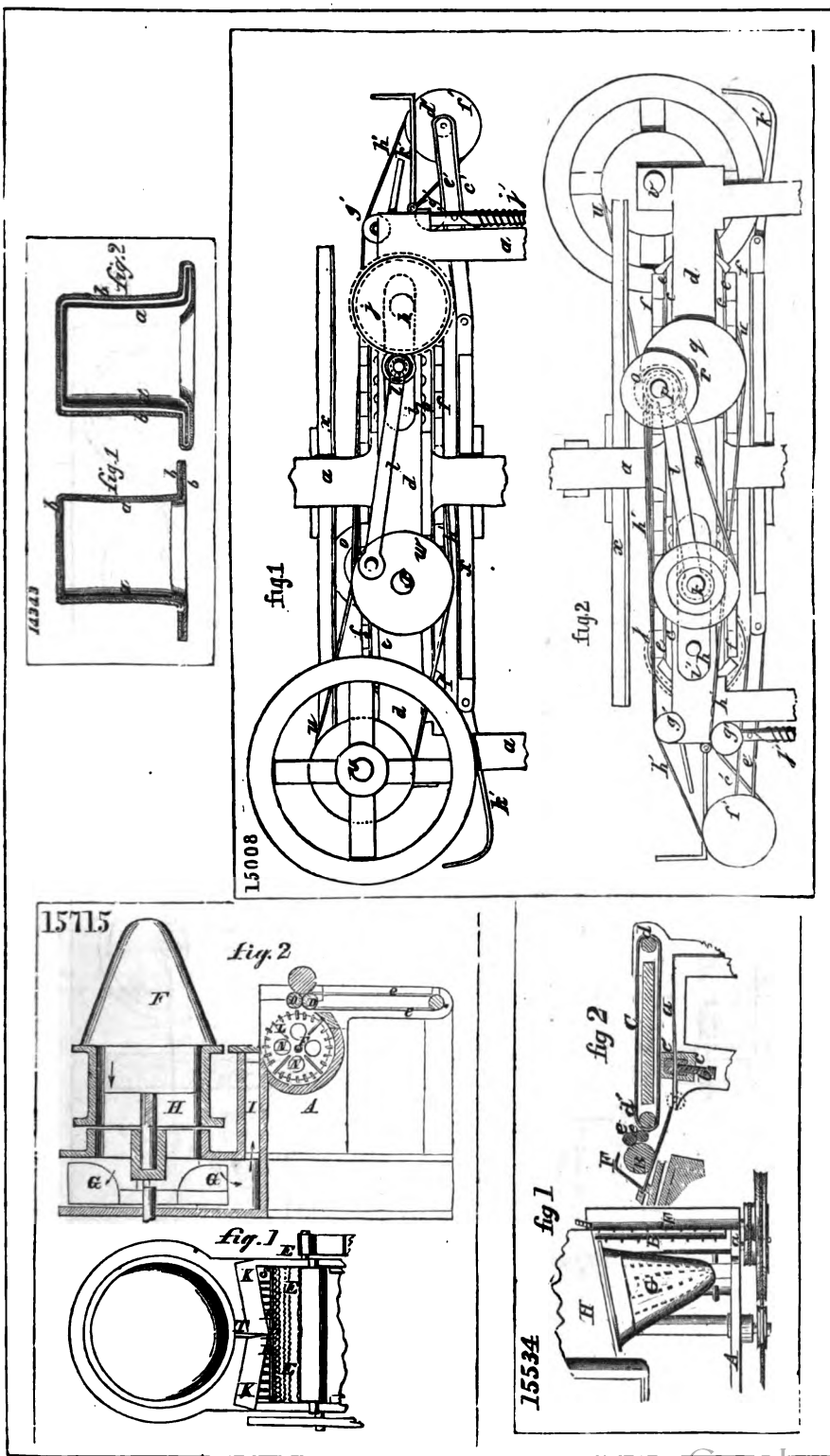

Digitized by Google

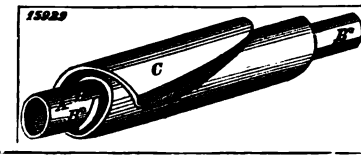

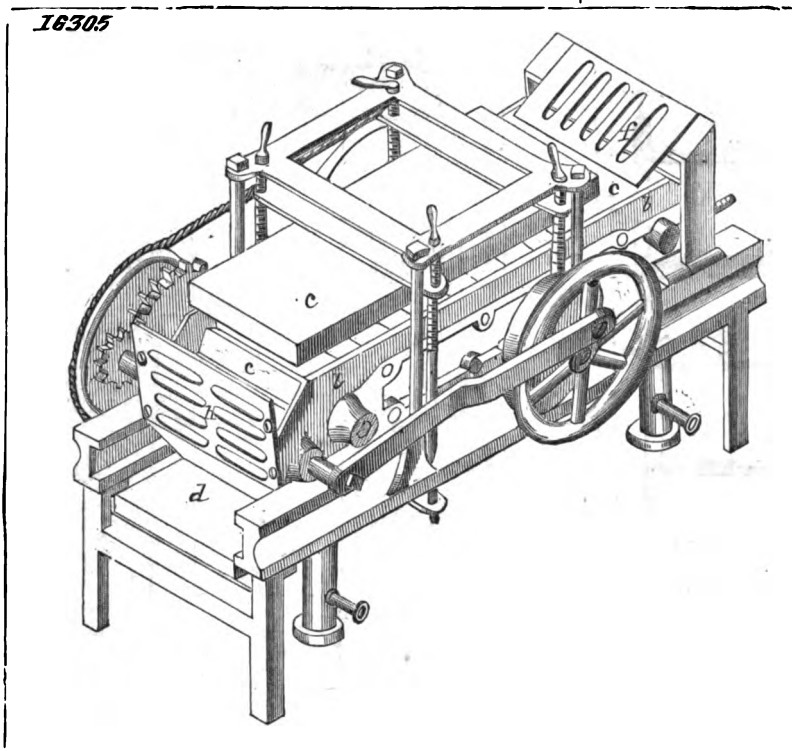

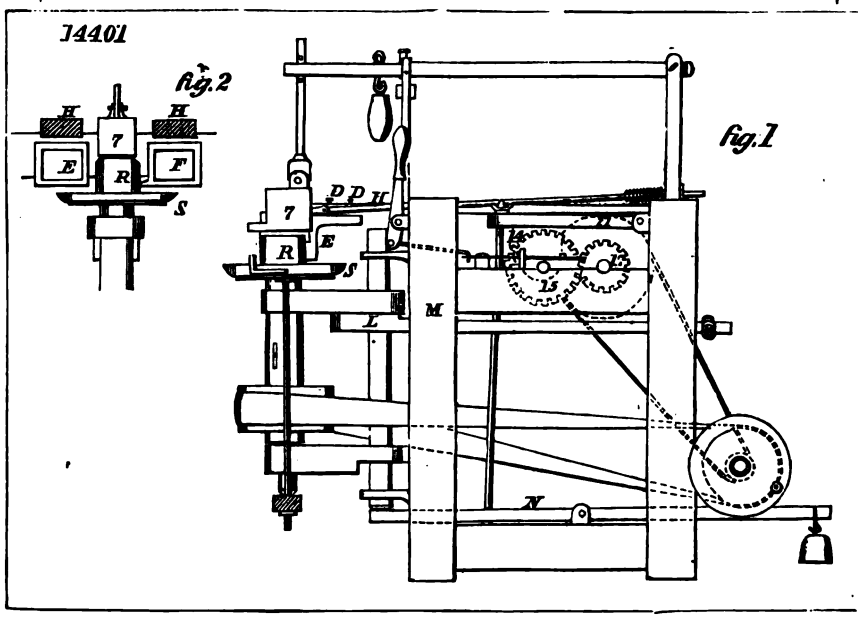

Digitized by Google

15484

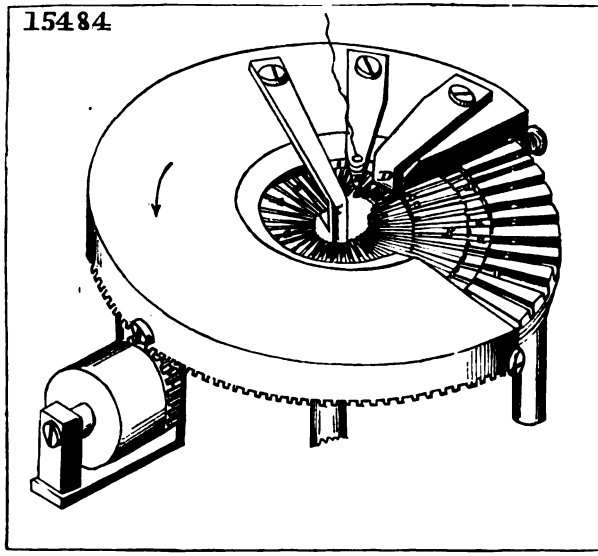

15166

fig.1

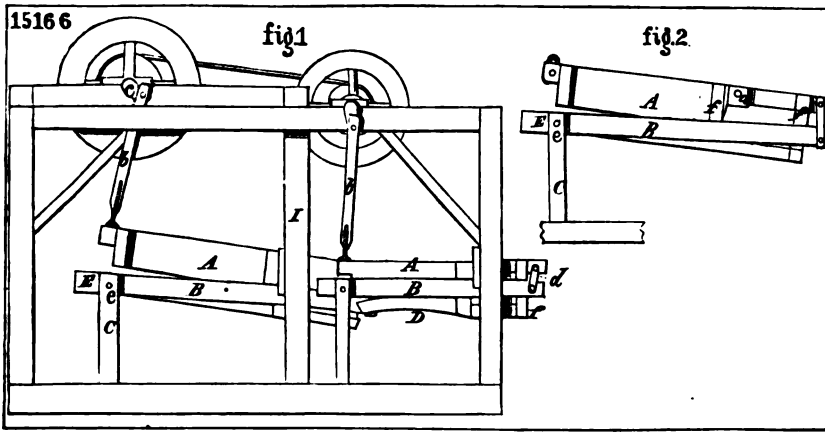

fig.2

15498

fig.1

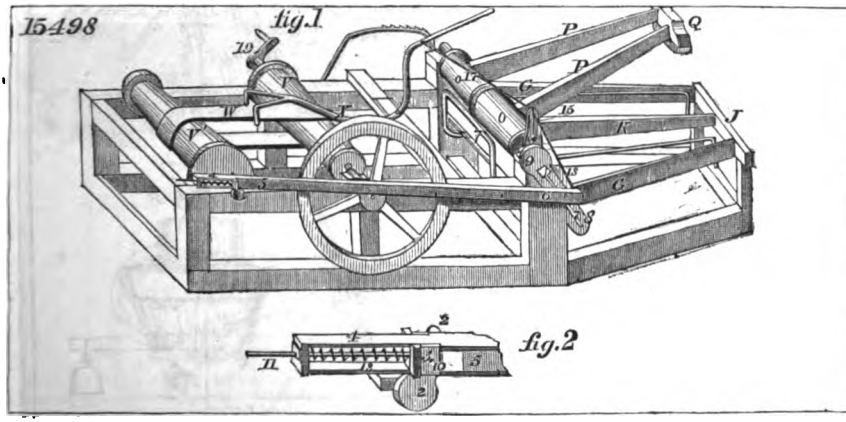

fig.2

Digitized by Google

14394

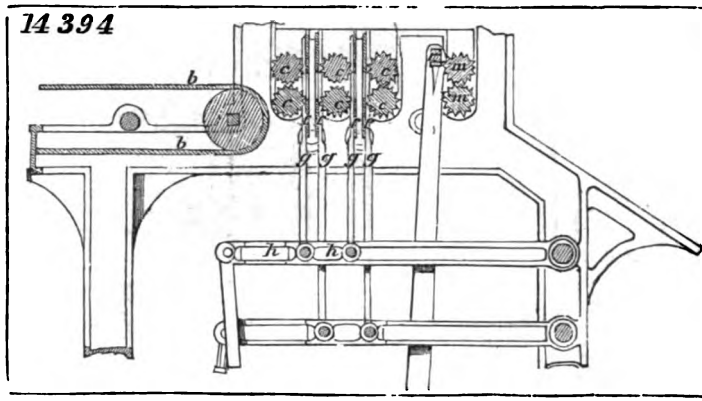

15607

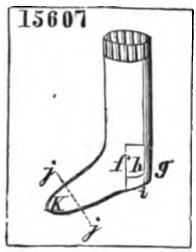

16279

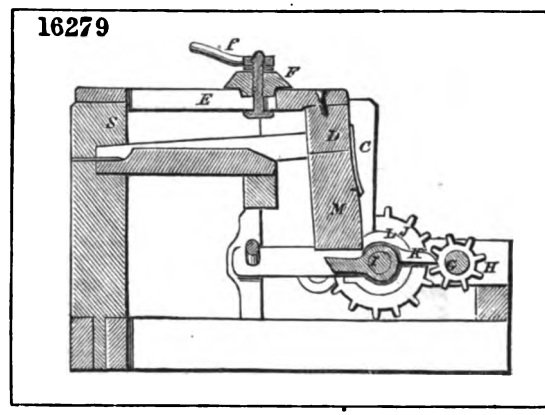

16285

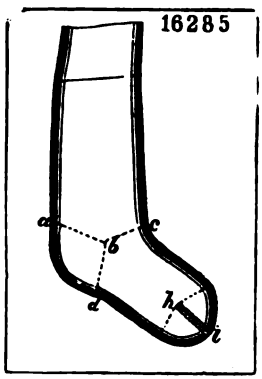

15314

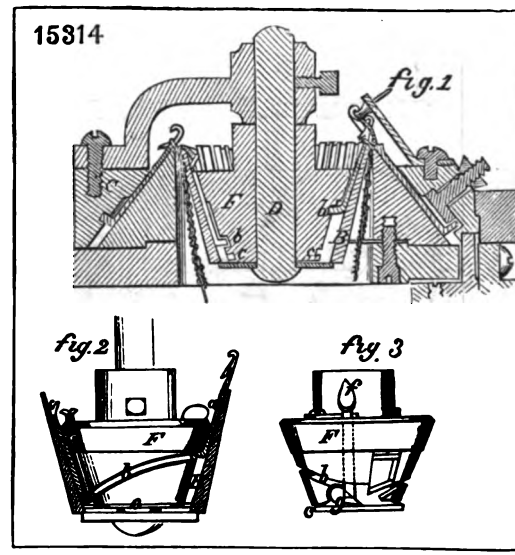

15006

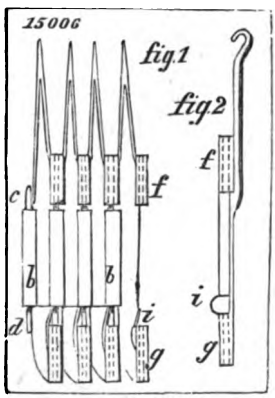

Digitized by Google

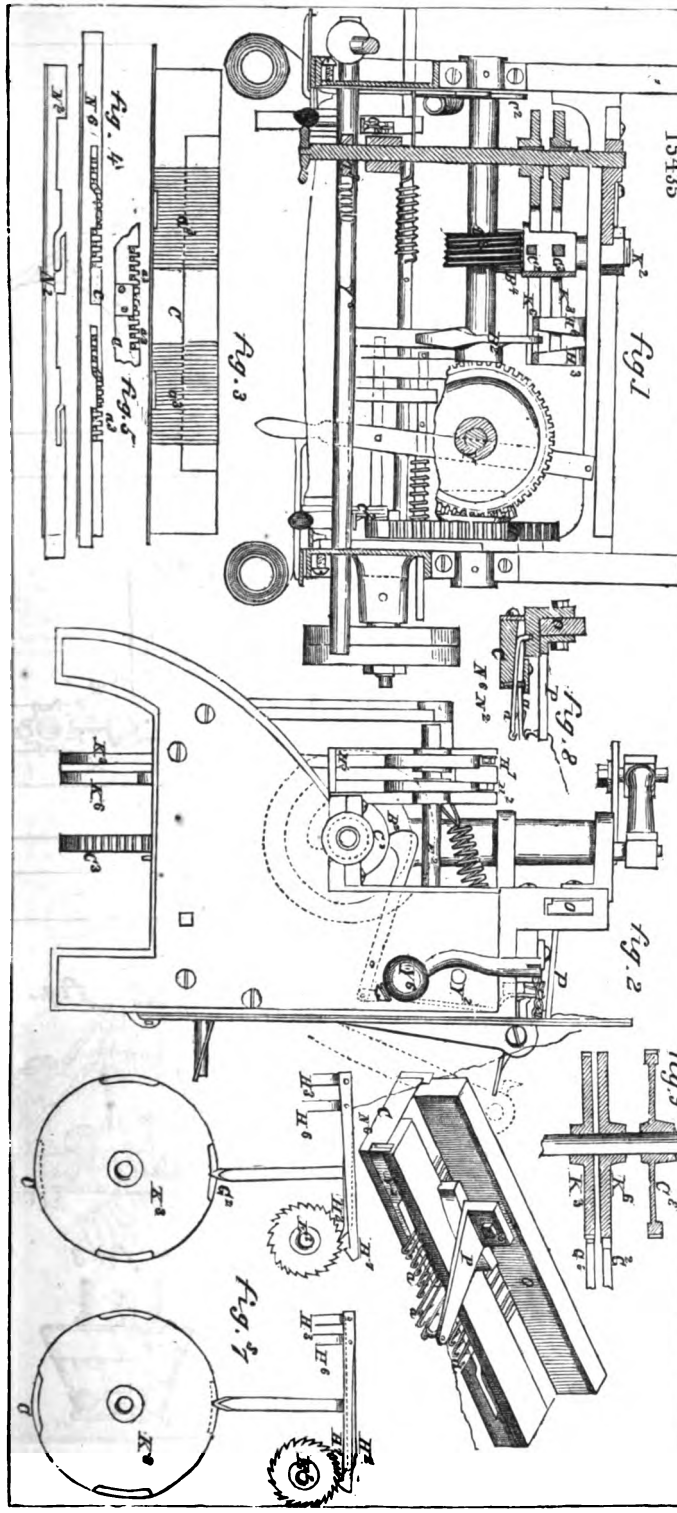
15435
Fig. 1
Fig. 2
Fig. 3
Fig. 4
Fig. 5
Fig. 6
Fig. 7
Fig. 8
Fig. 9

15492

fig 1

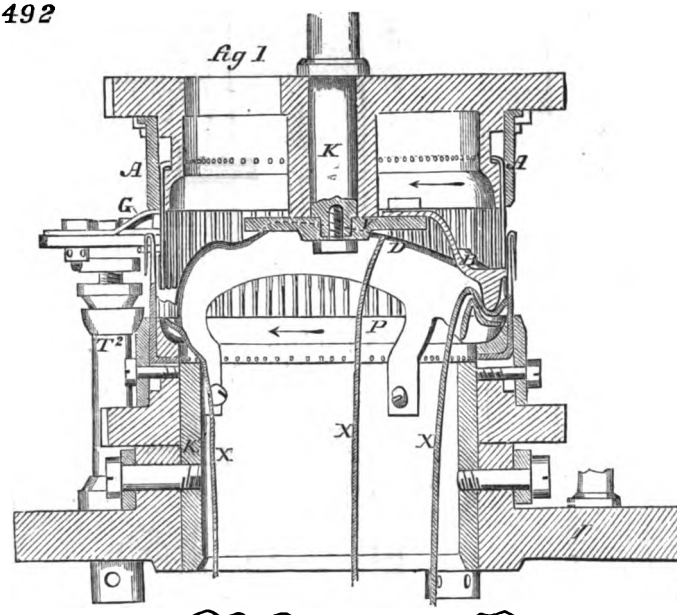

fig 2

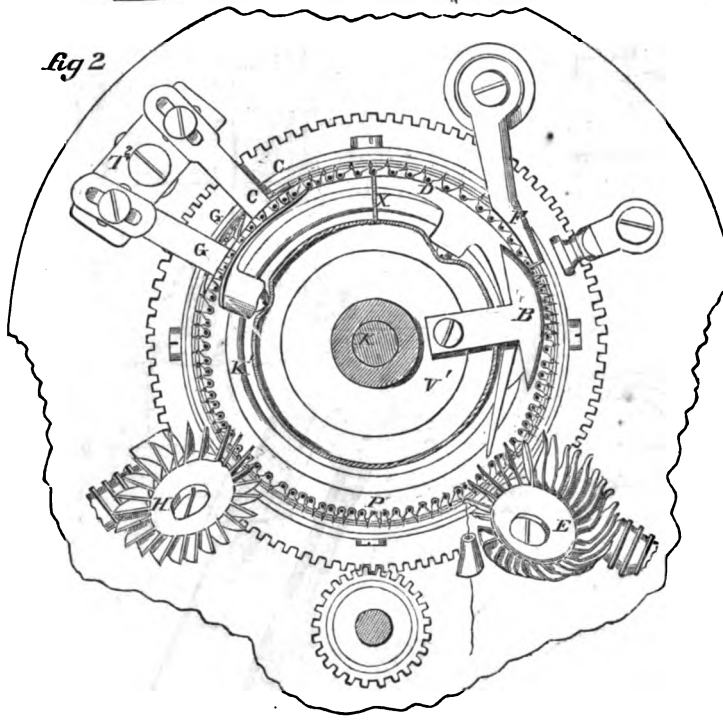

Digitized by Google

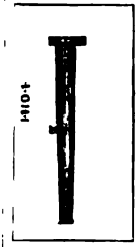

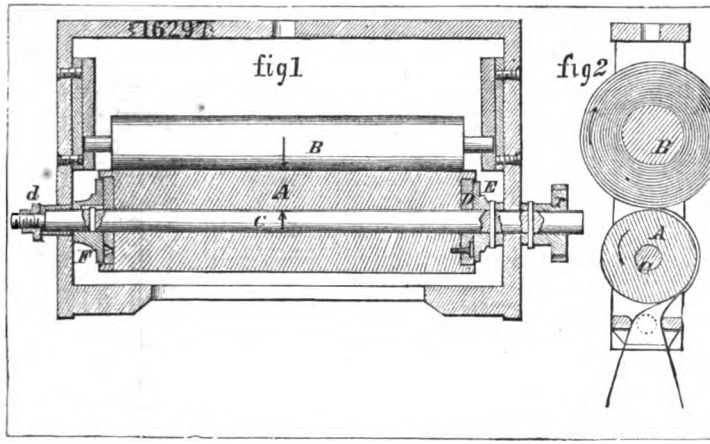
16297
fig1
fig2
B
A
C
D
E
F
d
B
A
C

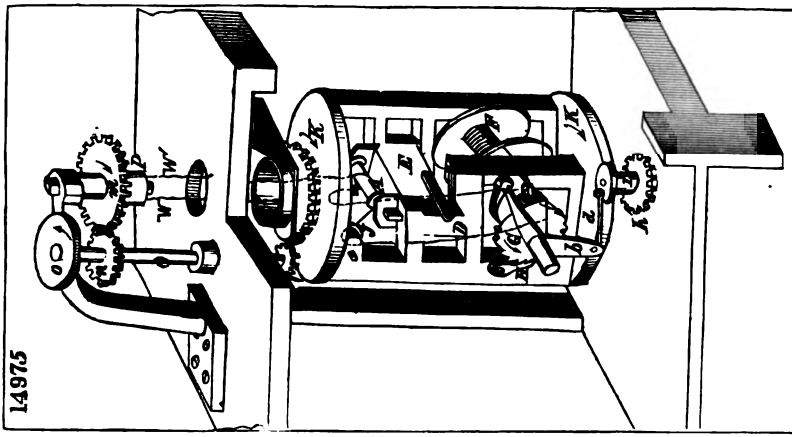
14975

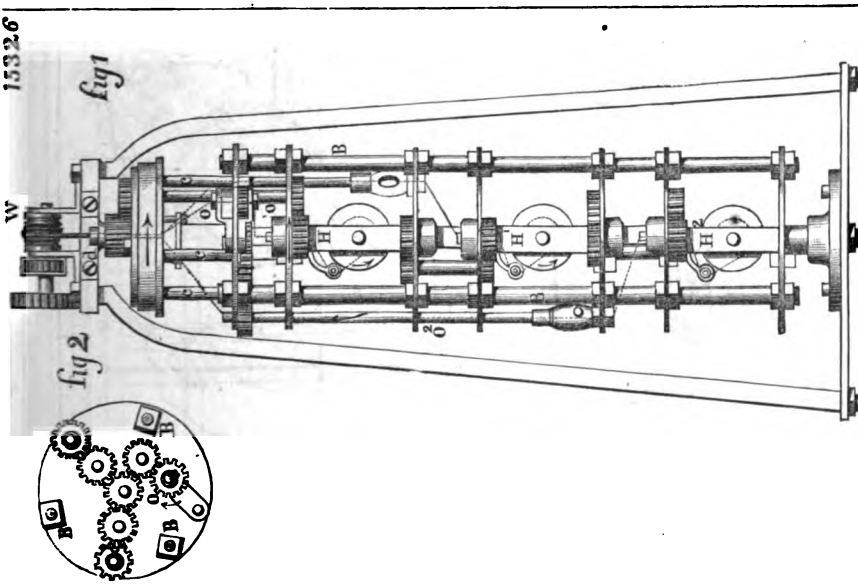
15326
fig1
fig2
W
B
H
H
H
B
B
B
B

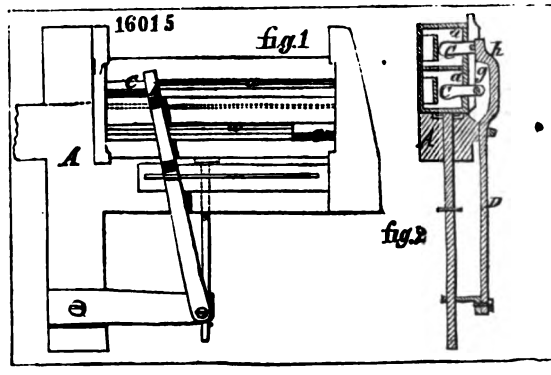

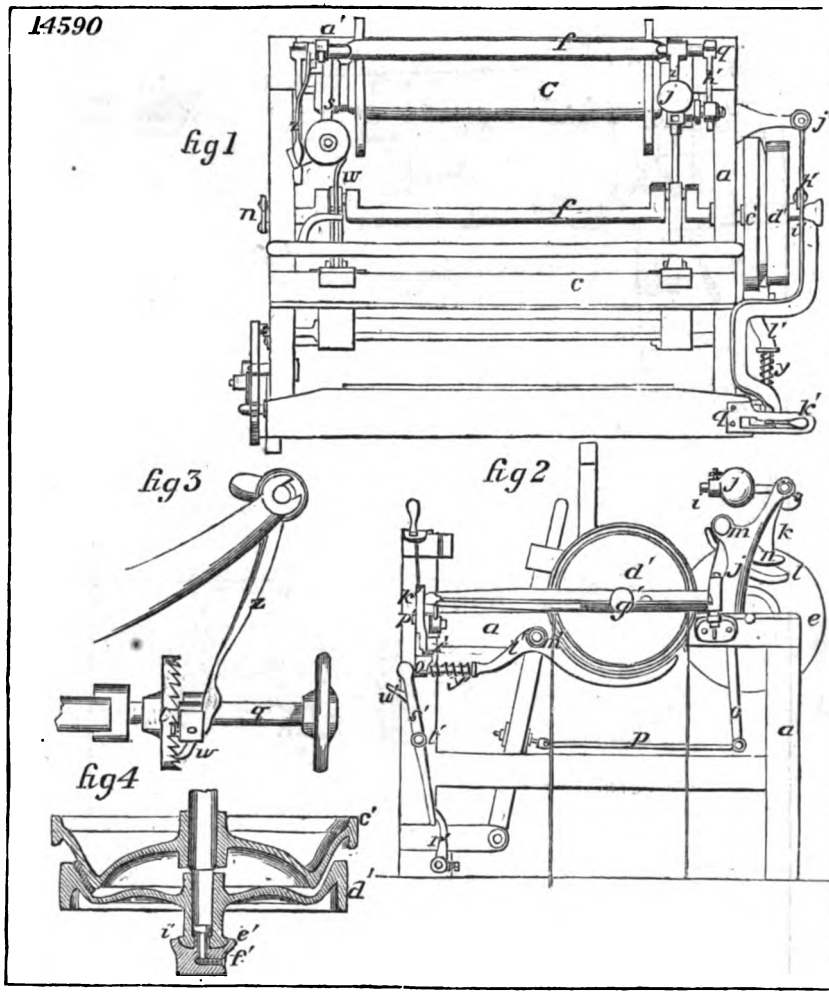

Digitized by Google

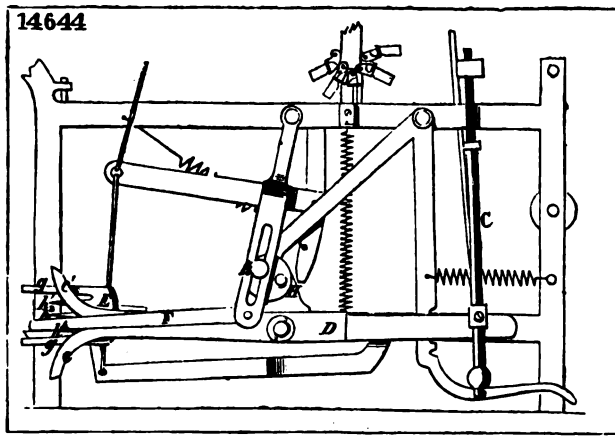

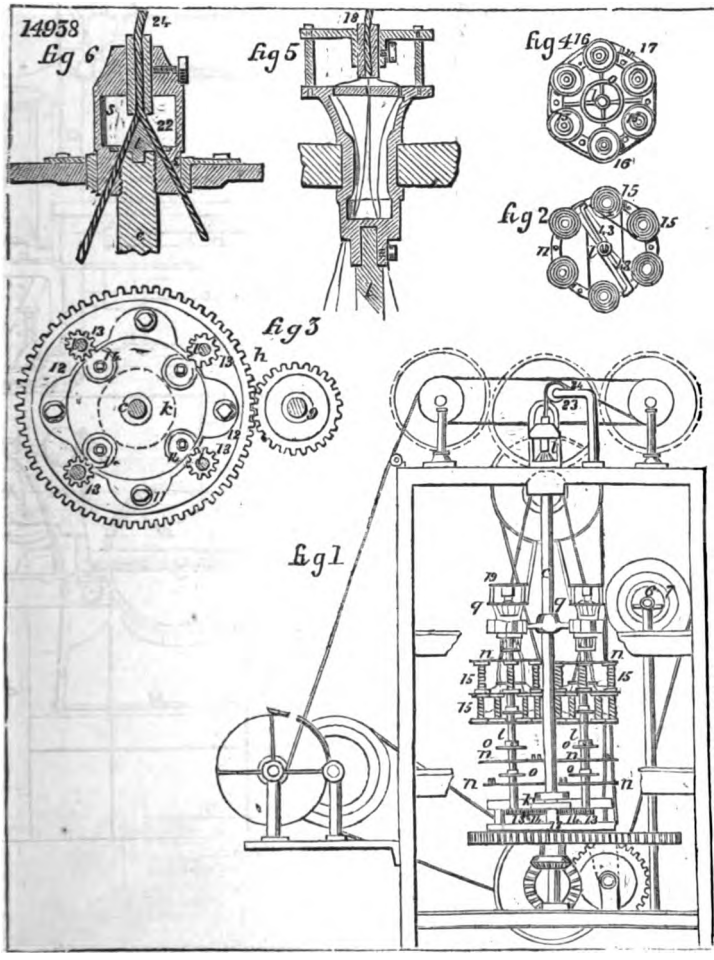

Digitized by Google

16271

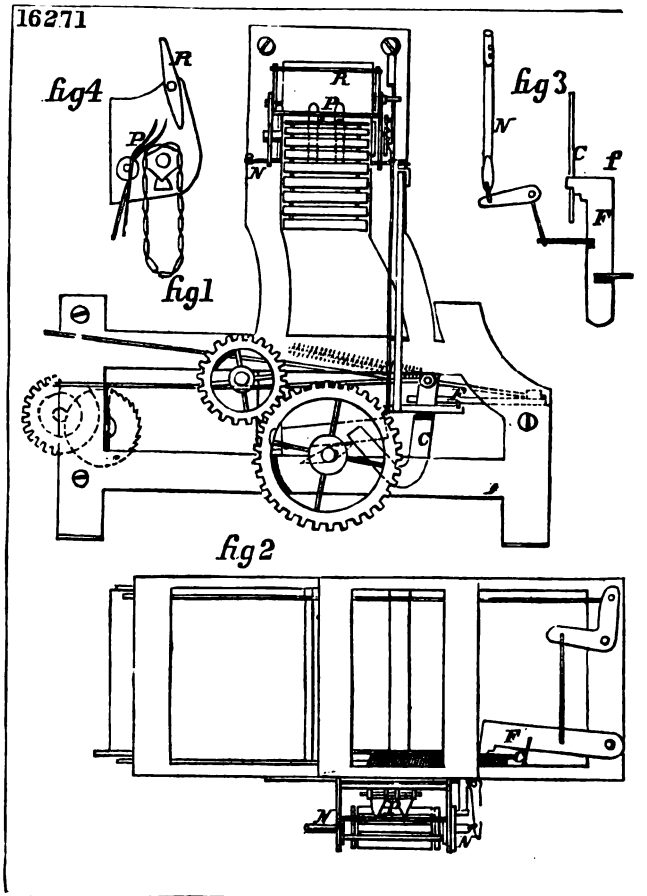

15186

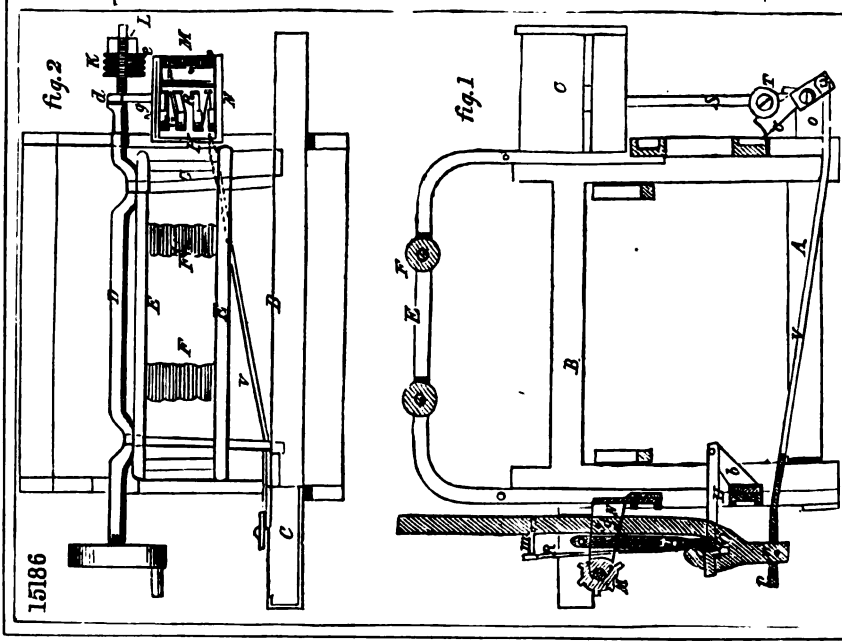

Digitized by Google

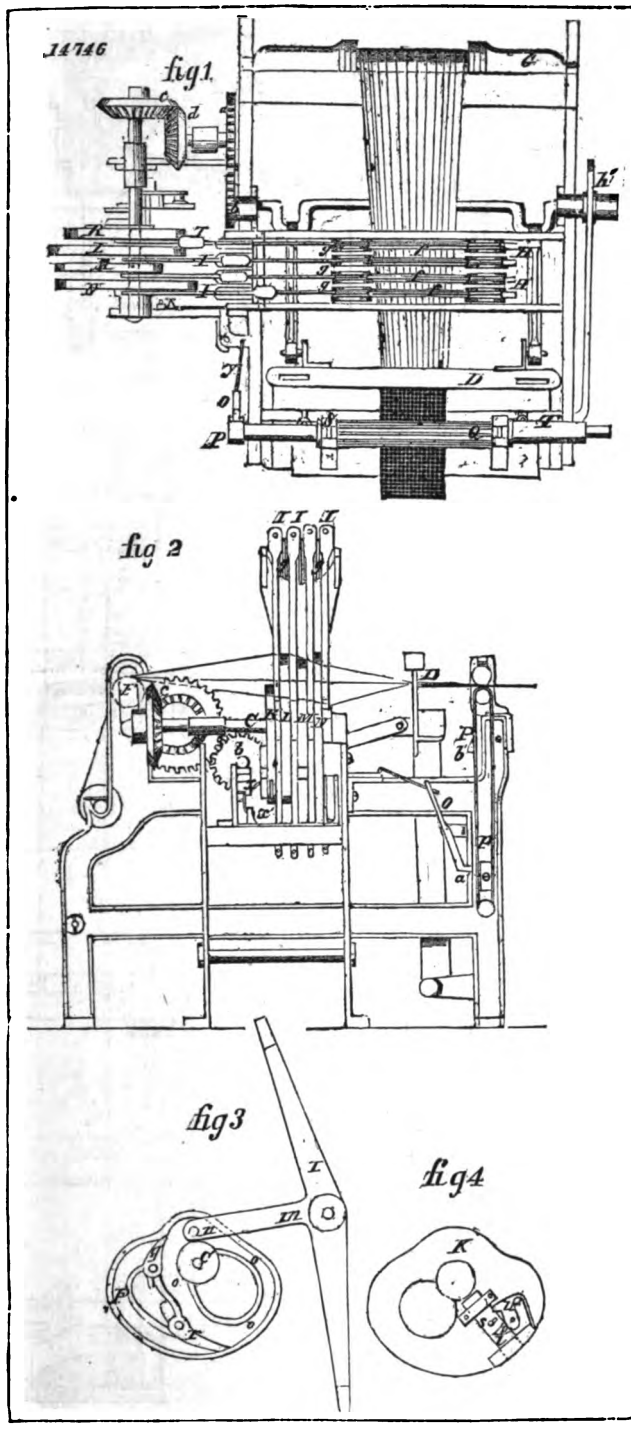

Digitized by Google

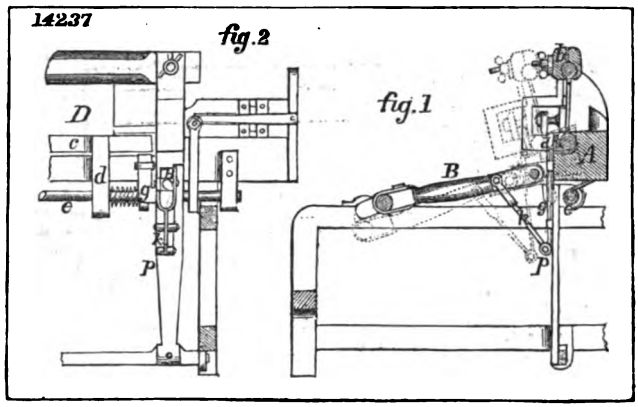

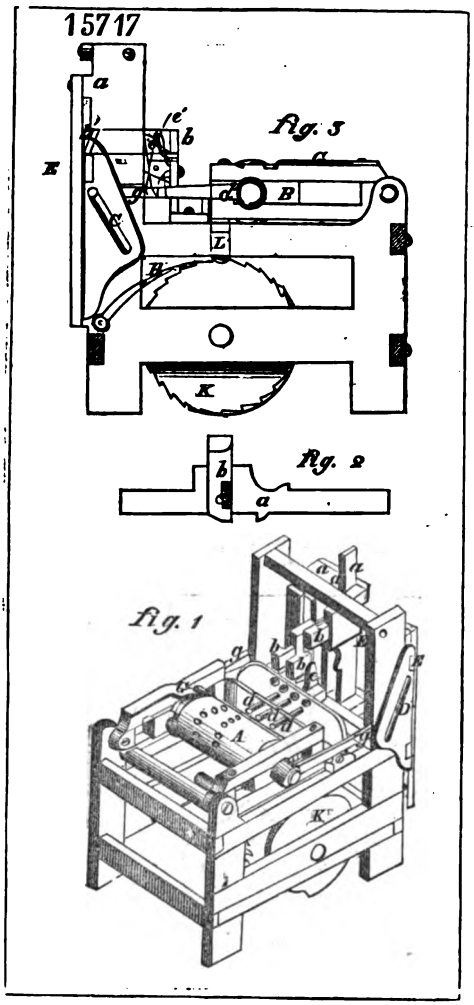

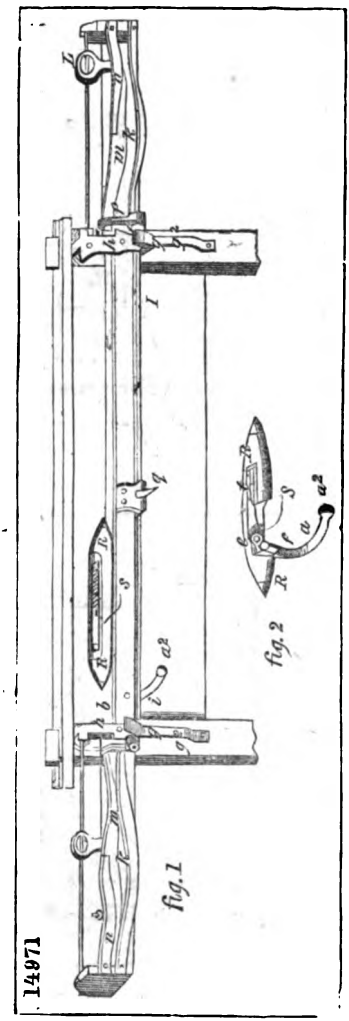

Digitized by Google

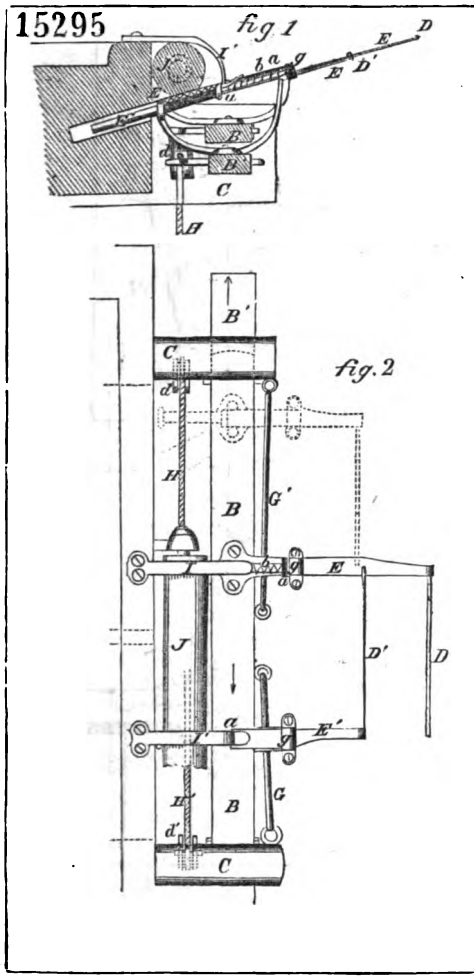

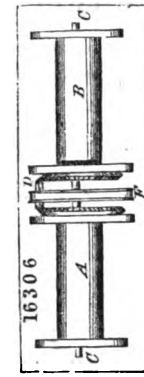

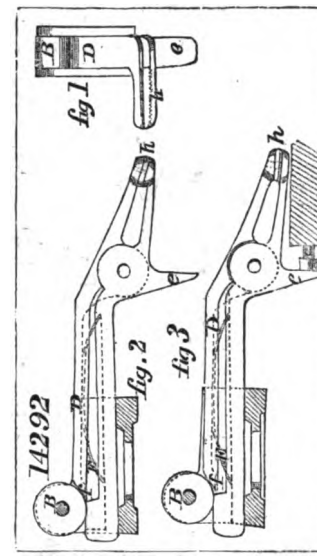

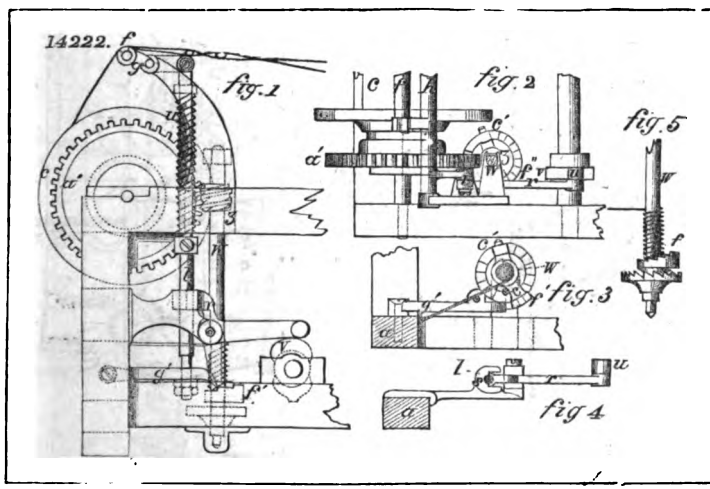

Digitized by Google

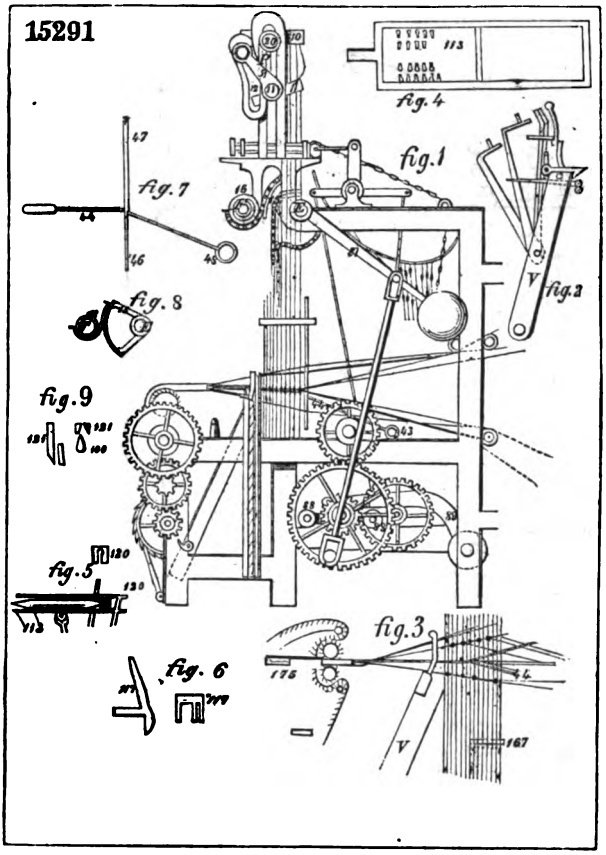

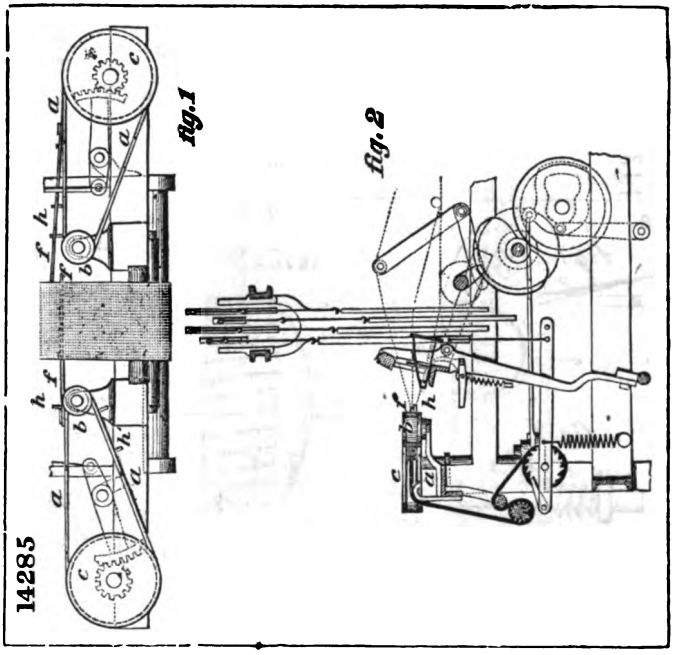

Digitized by Google

14358

fig. 1

fig. 3

fig. 4

14218

fig. 1

fig. 2

16162

Digitized by Google

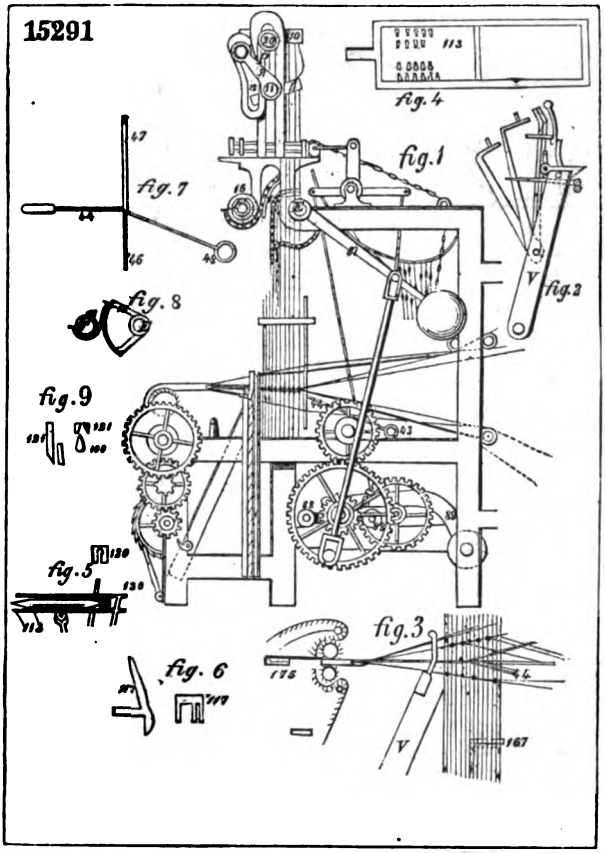

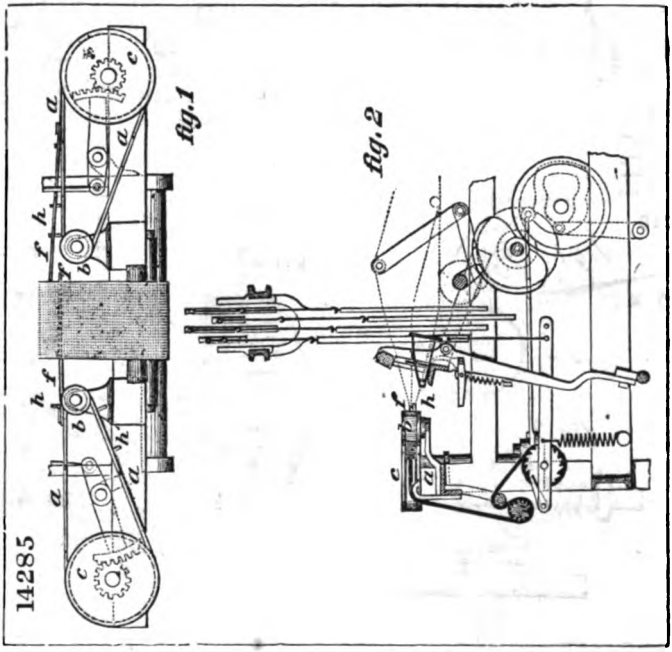

Digitized by Google

14358

fig. 1

fig. 3

fig. 4

14818

fig. 1

fig. 2

16162

Digitized by Google

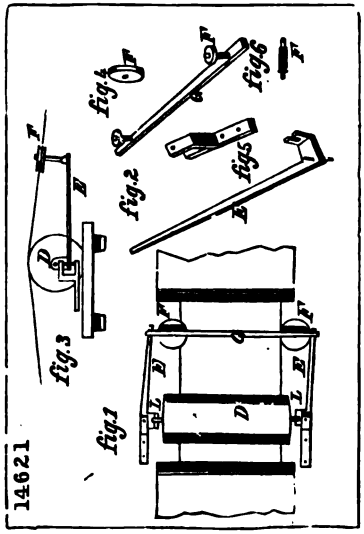

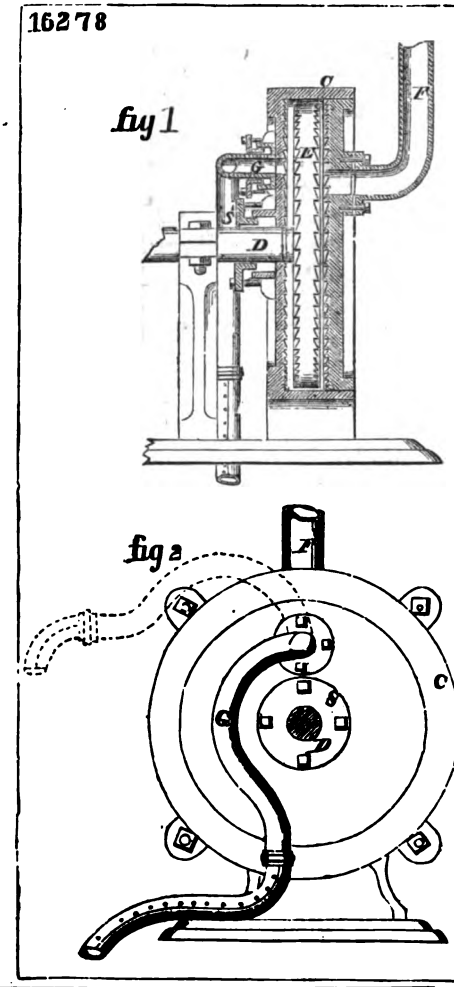

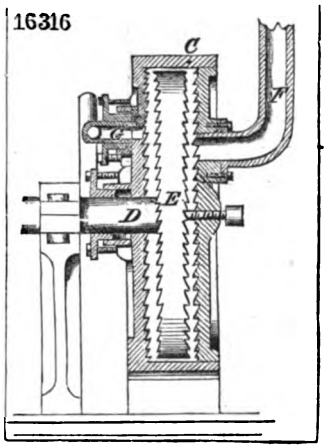

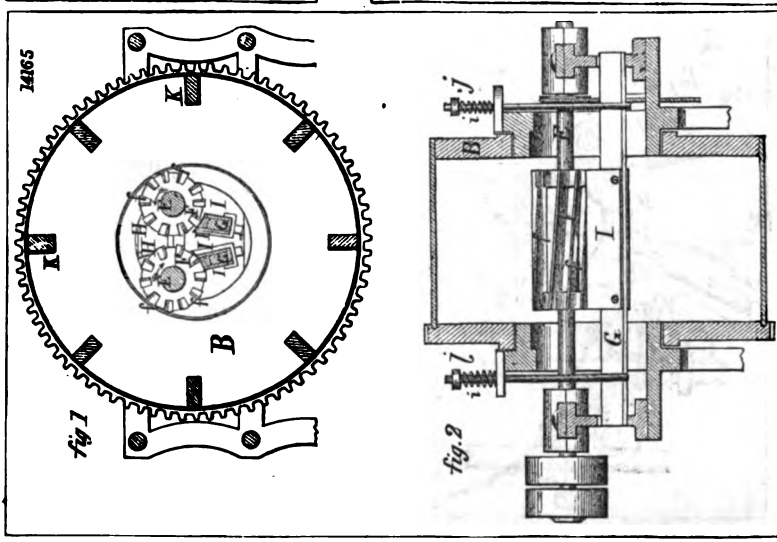

Digitized by Google

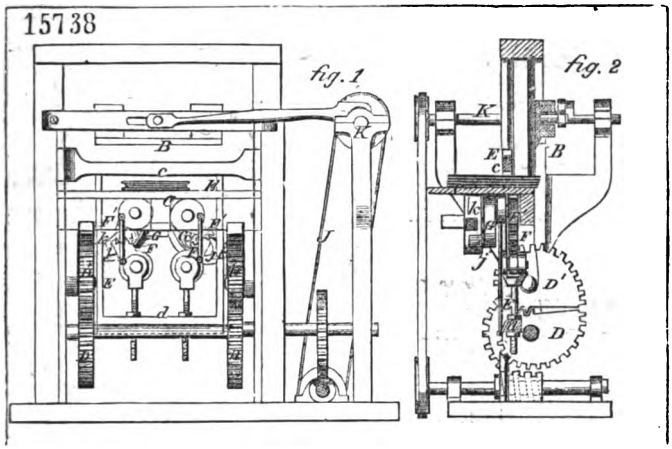

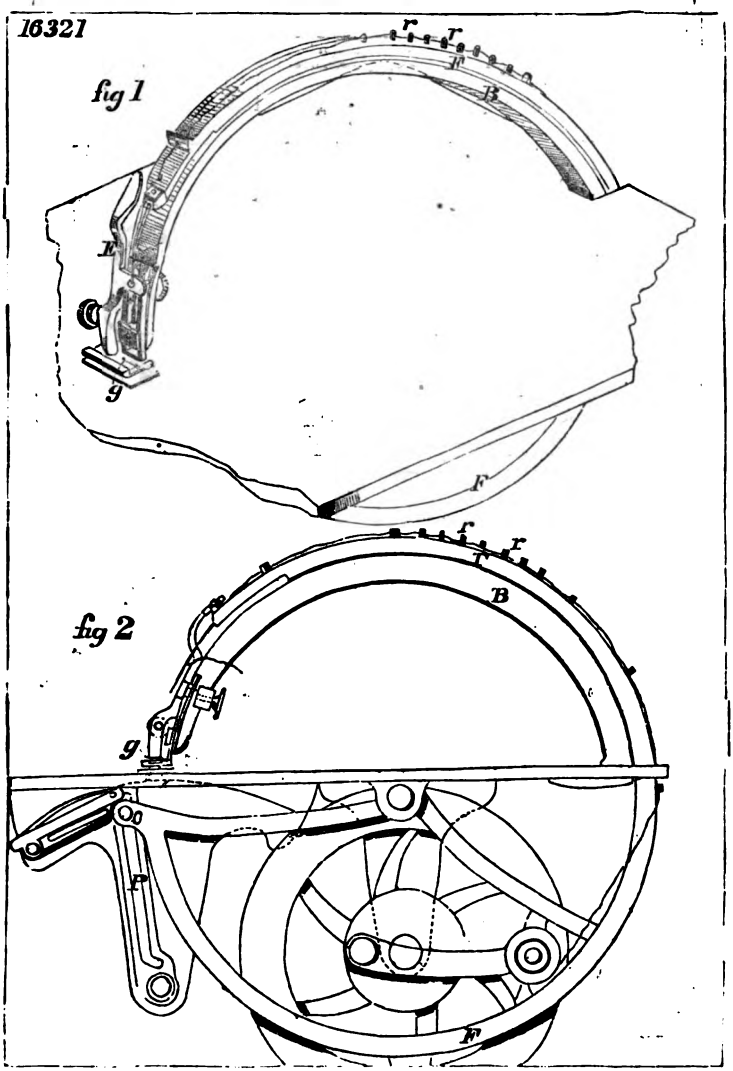

Digitized by Google

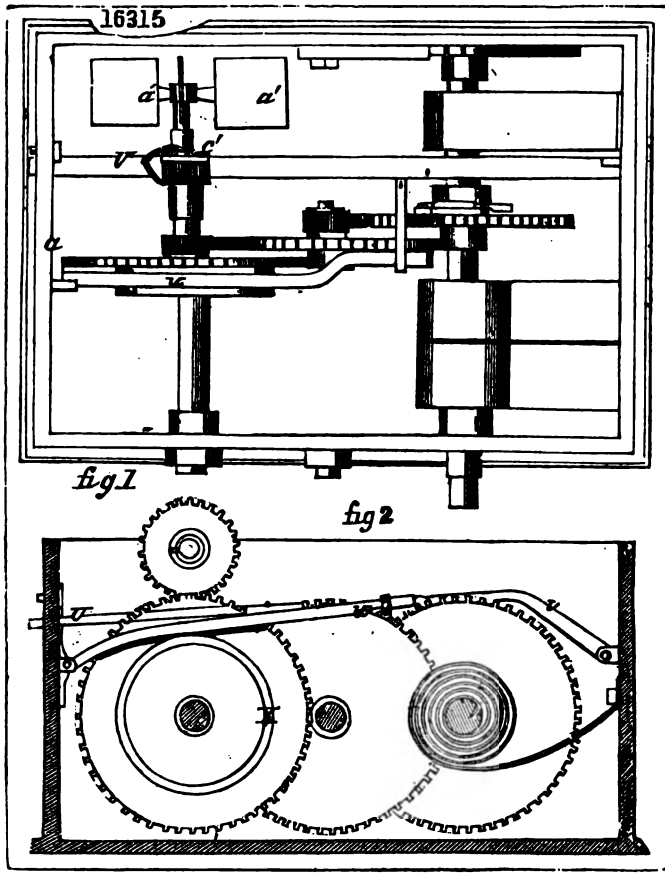

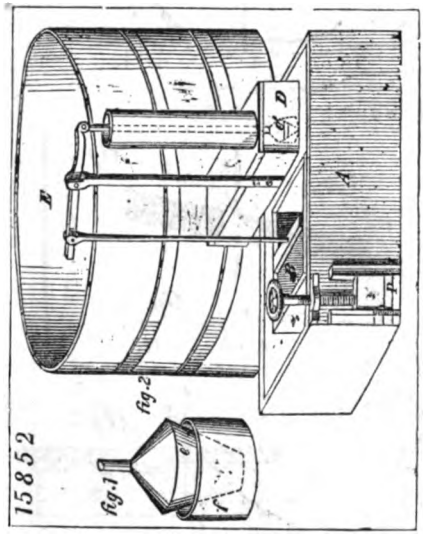

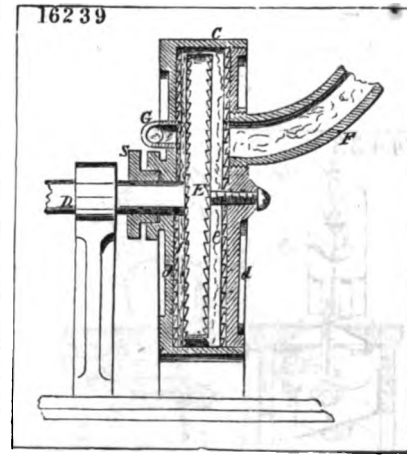

Digitized by Google

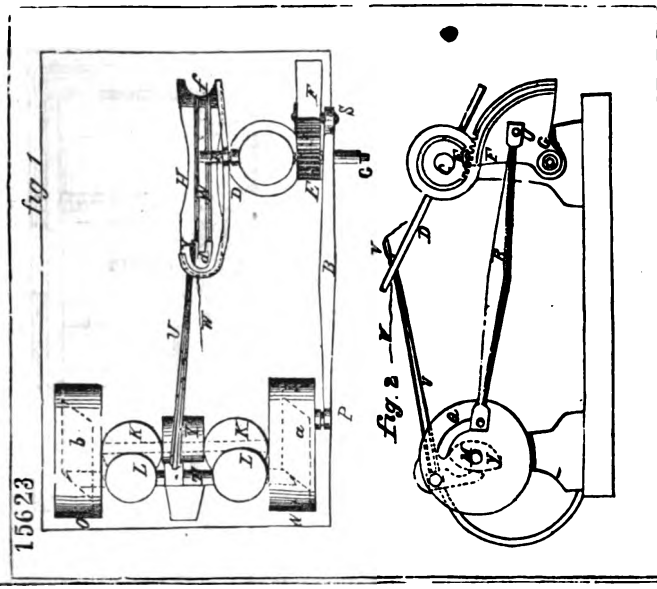

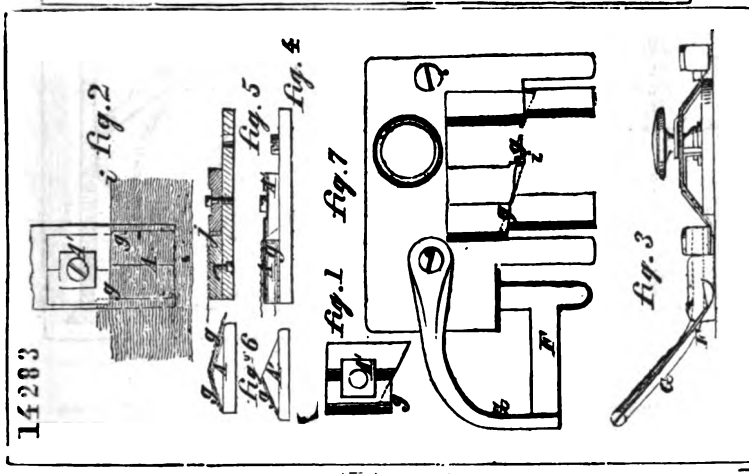

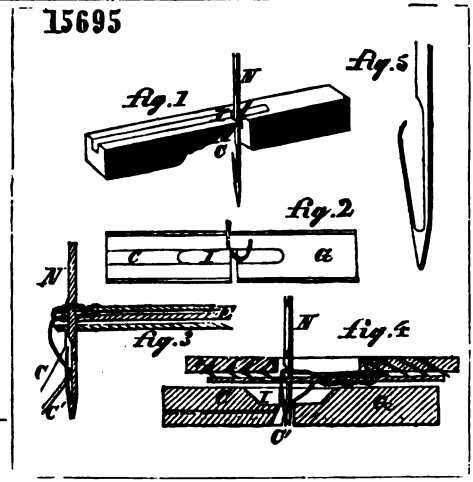

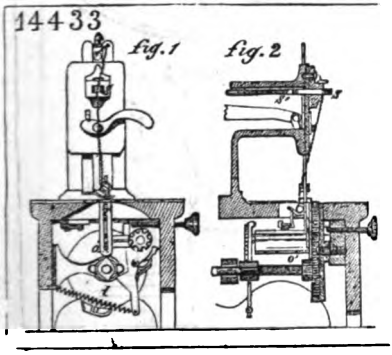

Digitized by Google

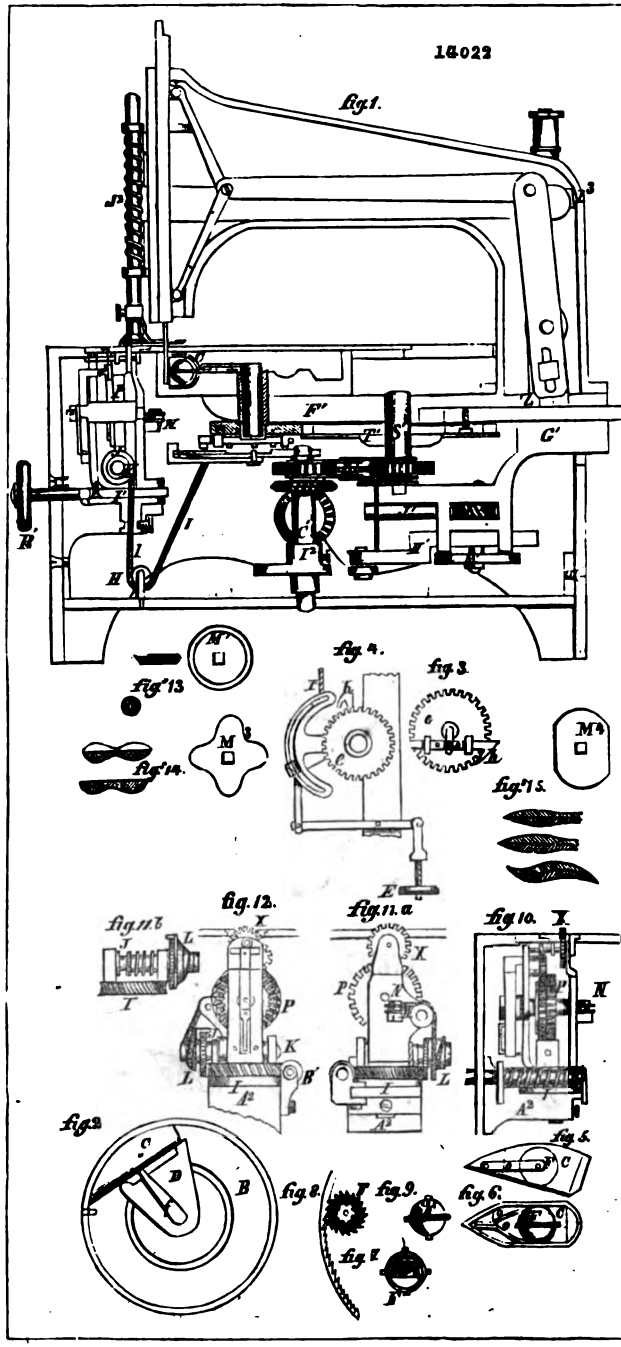

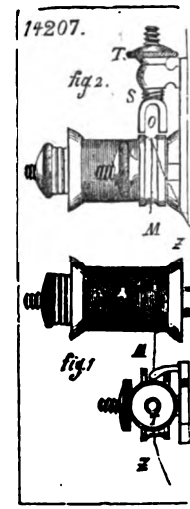

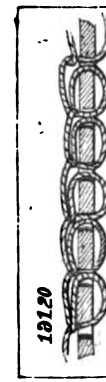

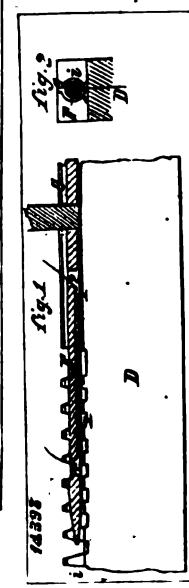

Digitized by Google

16136

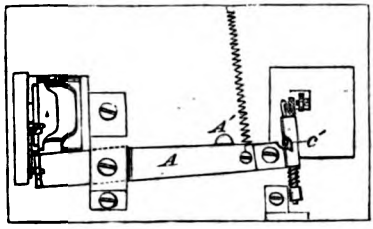

fig. 3

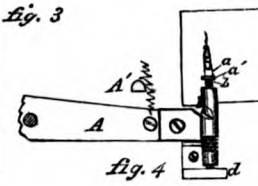

fig. 4

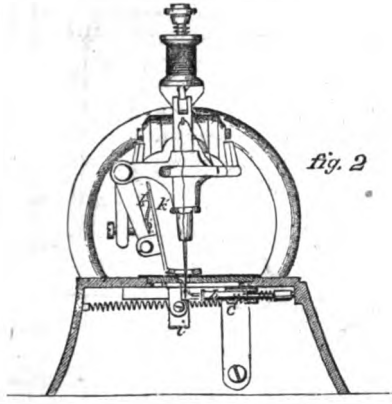

fig. 2

15469

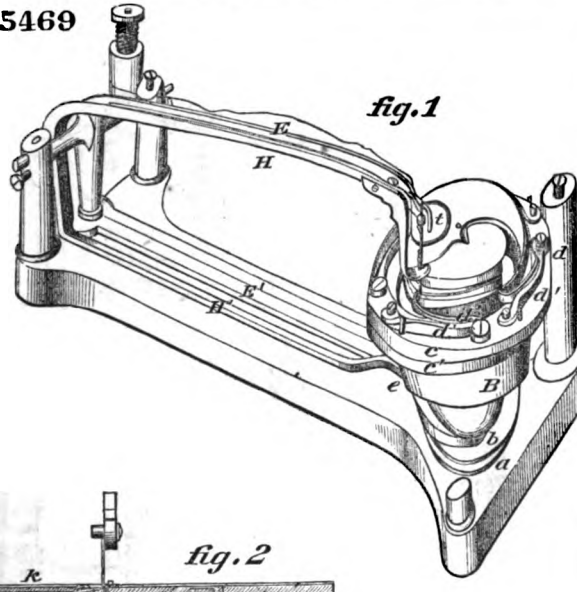

fig. 1

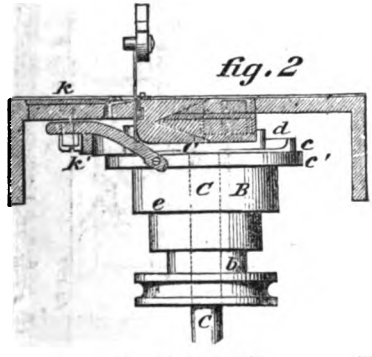

fig. 2

Digitized by Google

14141

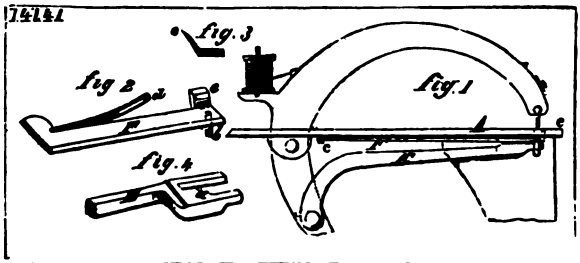

15635

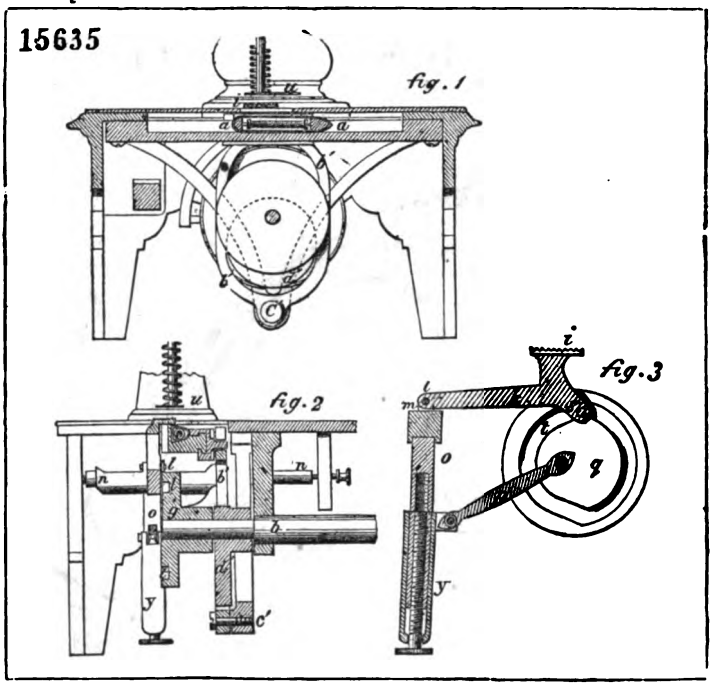

14475

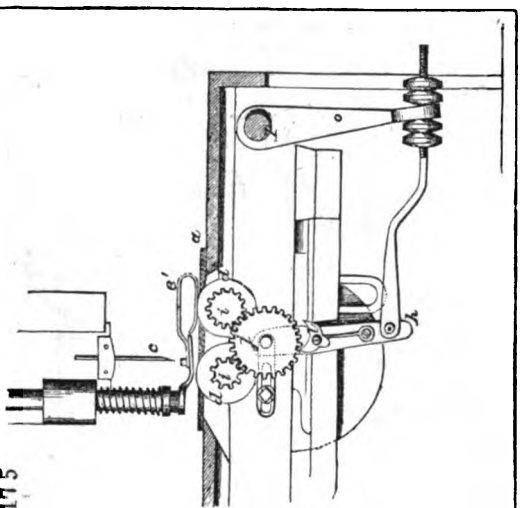

14324

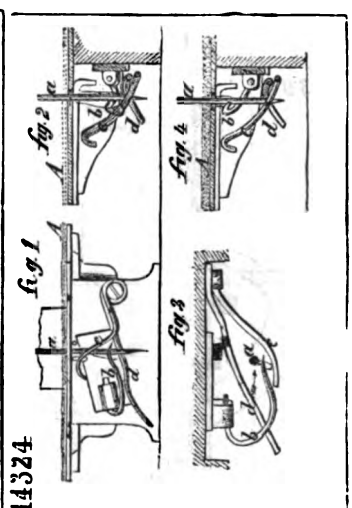

Digitized by Google

15170

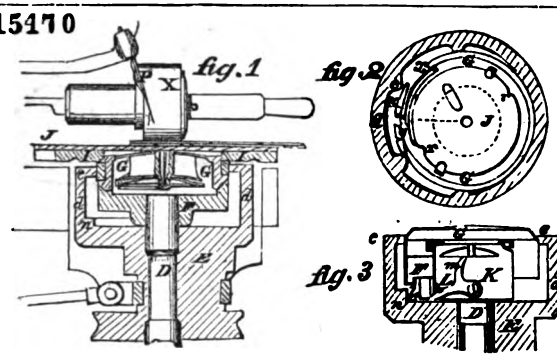

16026

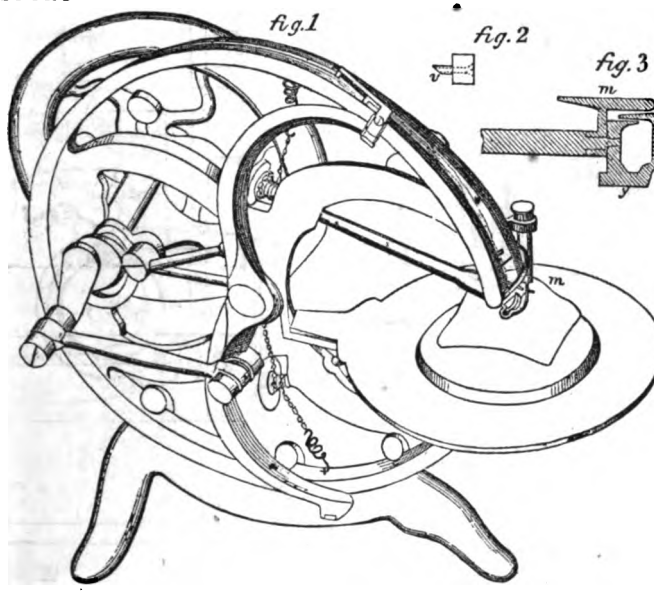

15396

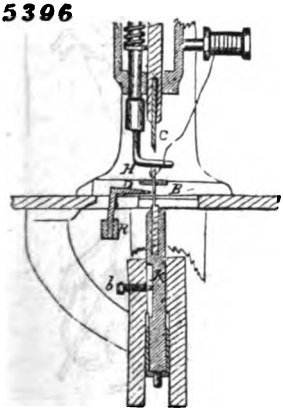

16030

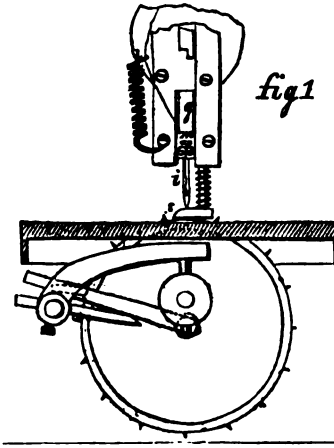

Digitized by Google

14141

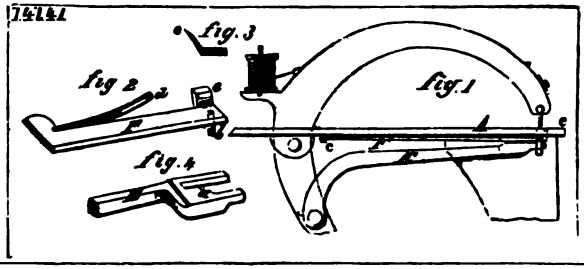

15635

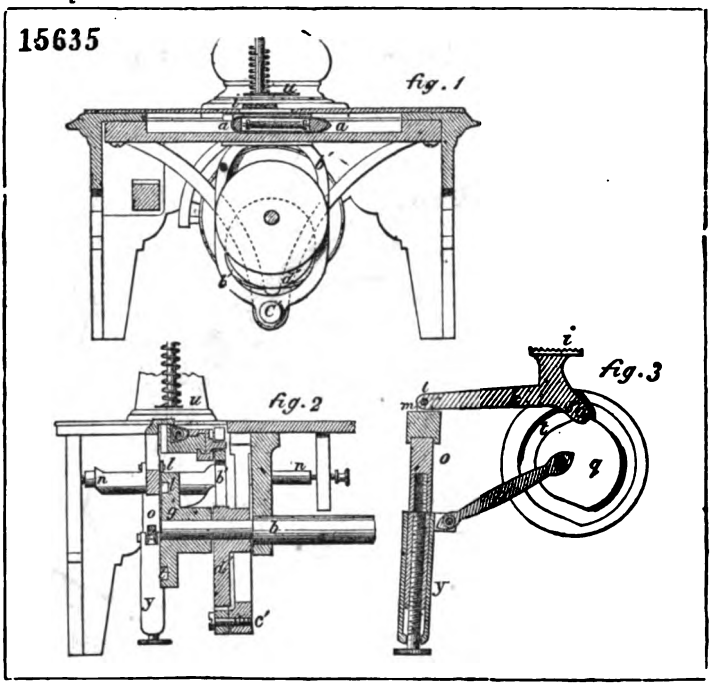

14475

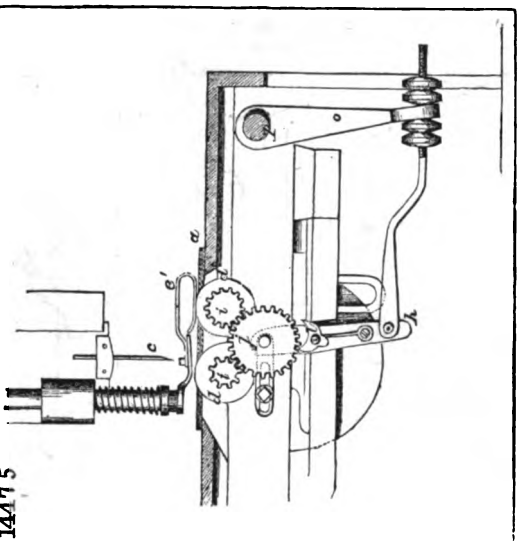

14324

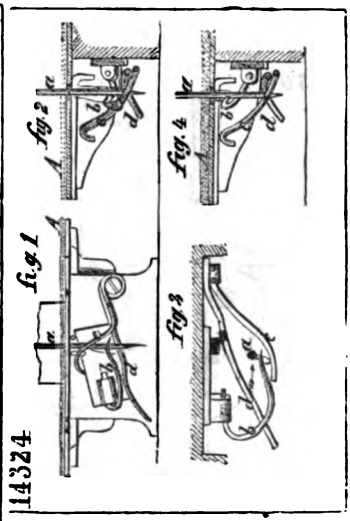

Digitized by Google

15470

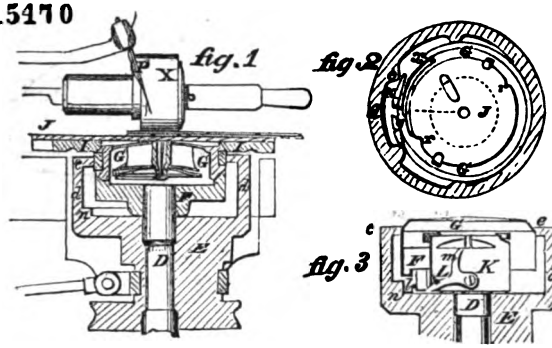

16026

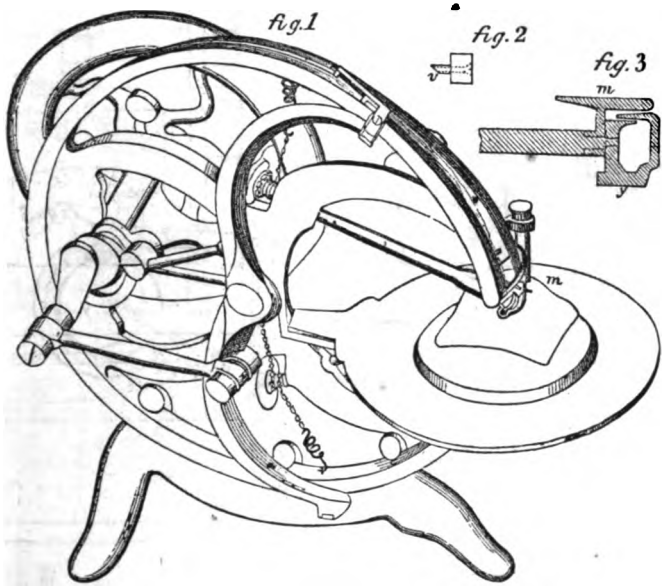

15396

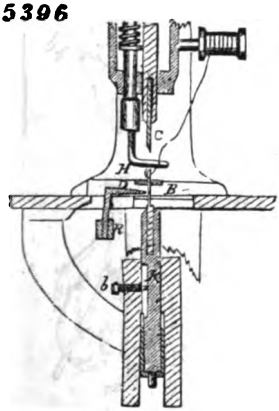

16030

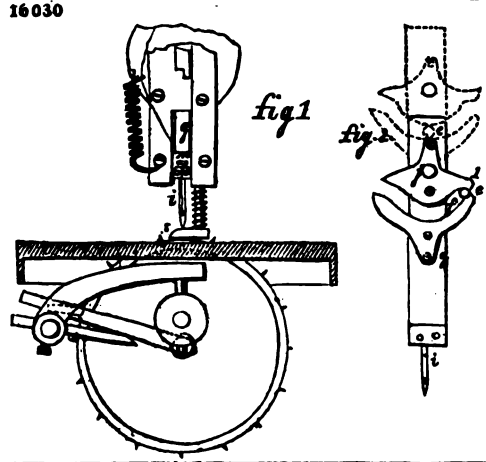

Digitized by Google

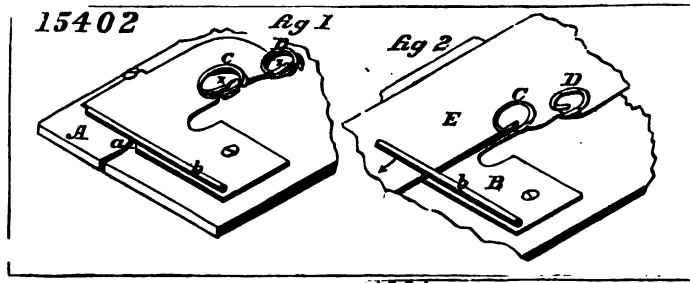

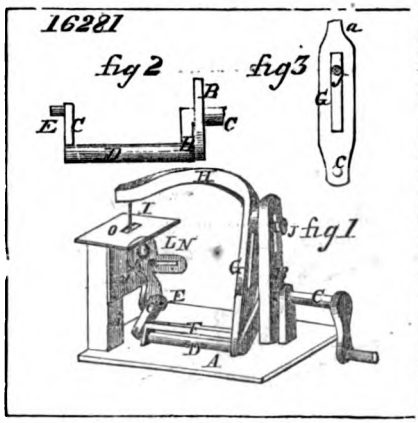

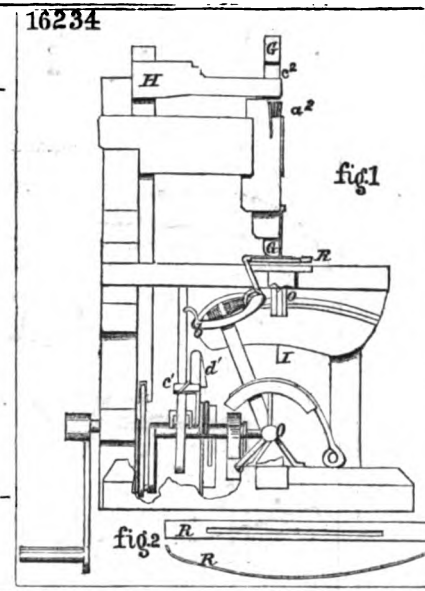

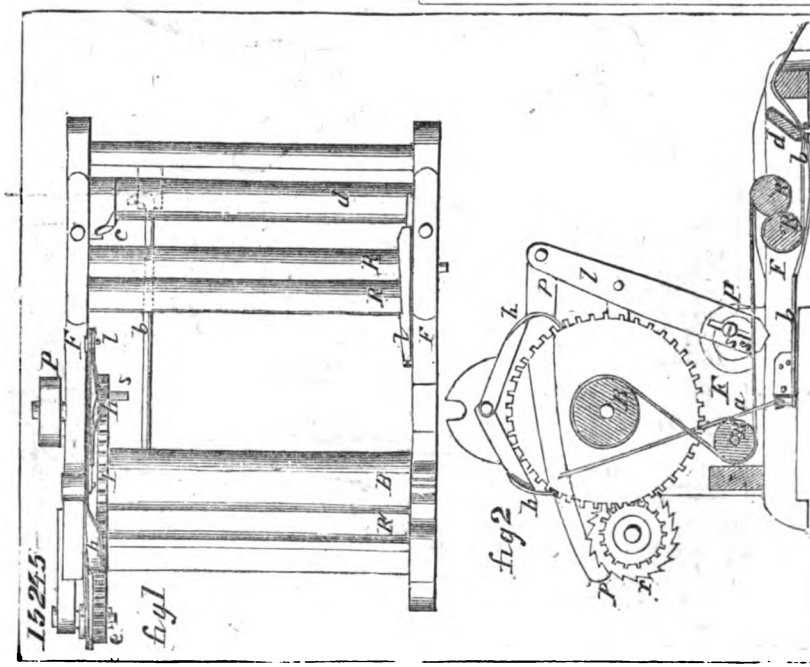

Digitized by Google

15020

fig 1

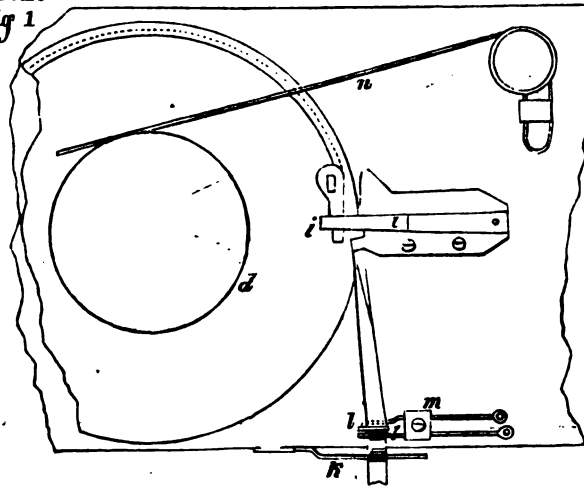

fig 2

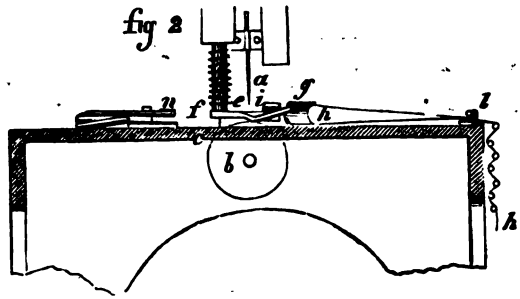

fig 3

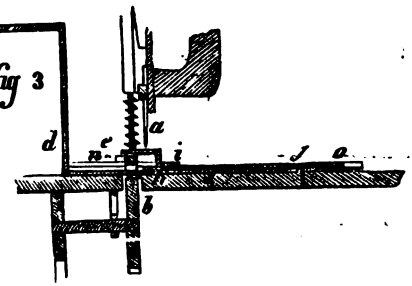

16029

fig 2

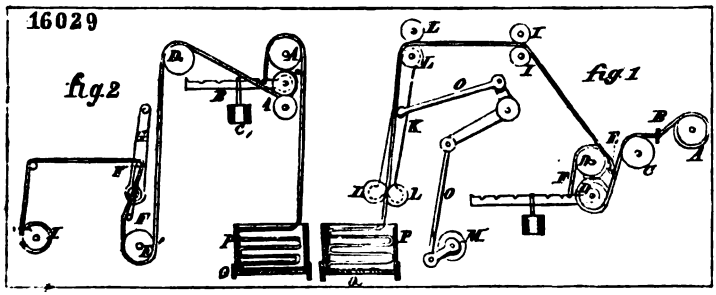

Digitized by Google

14482

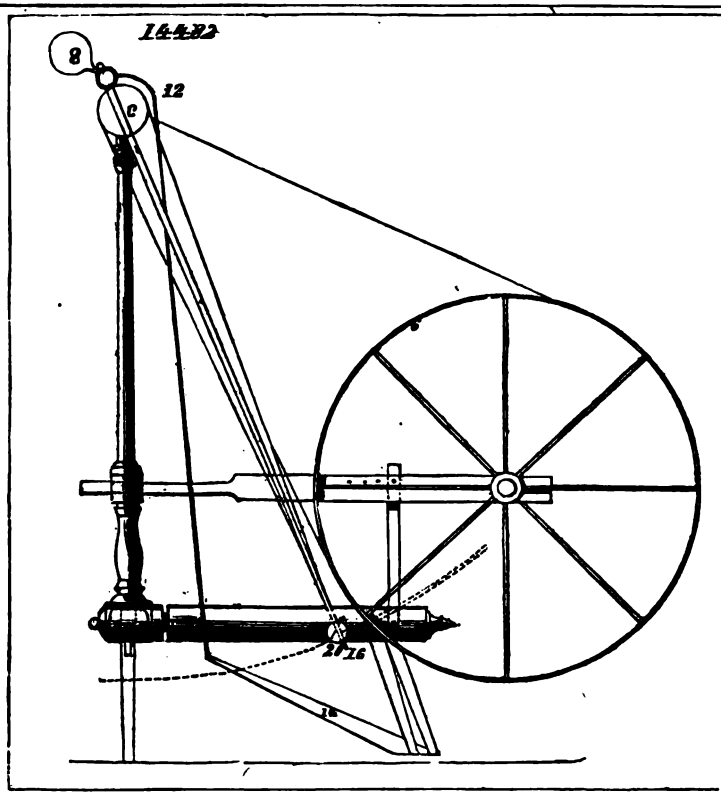

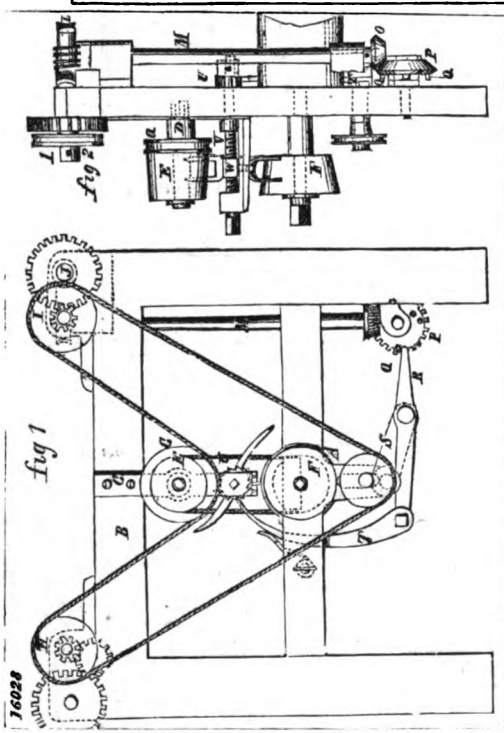

15535.

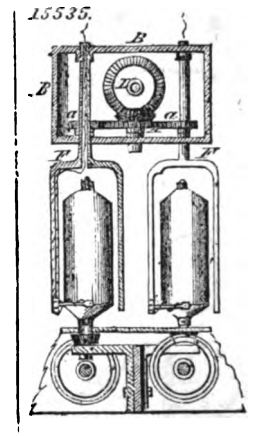

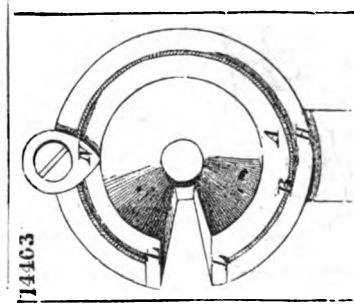

Digitized by Google

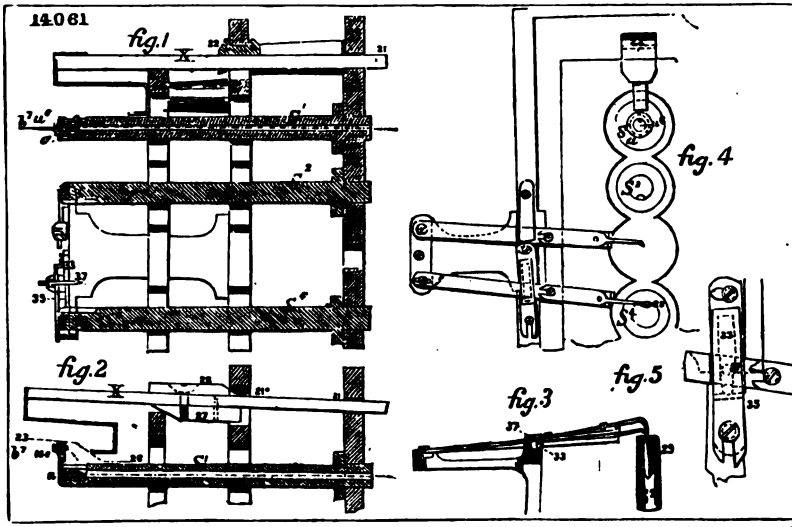

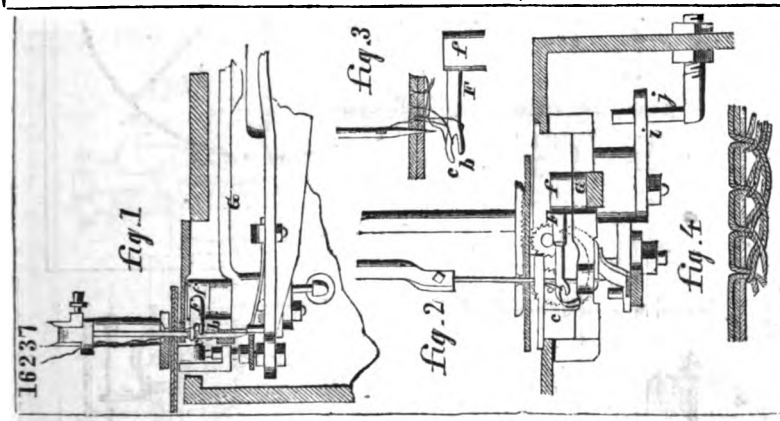

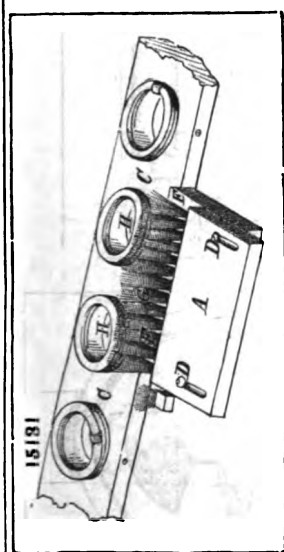

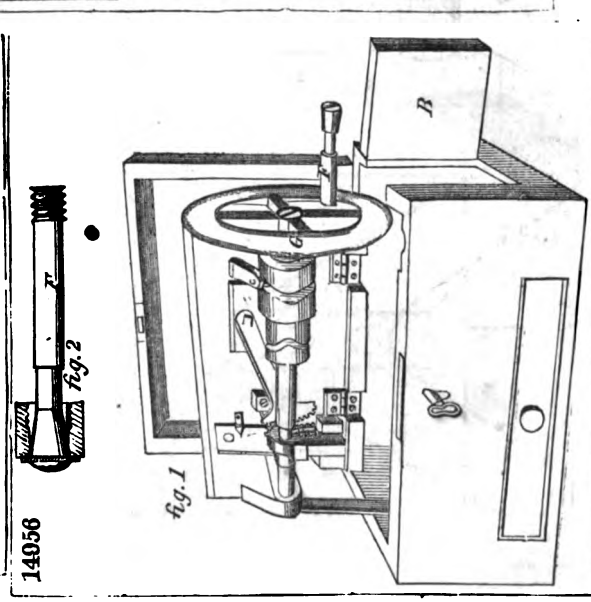

Digitized by Google

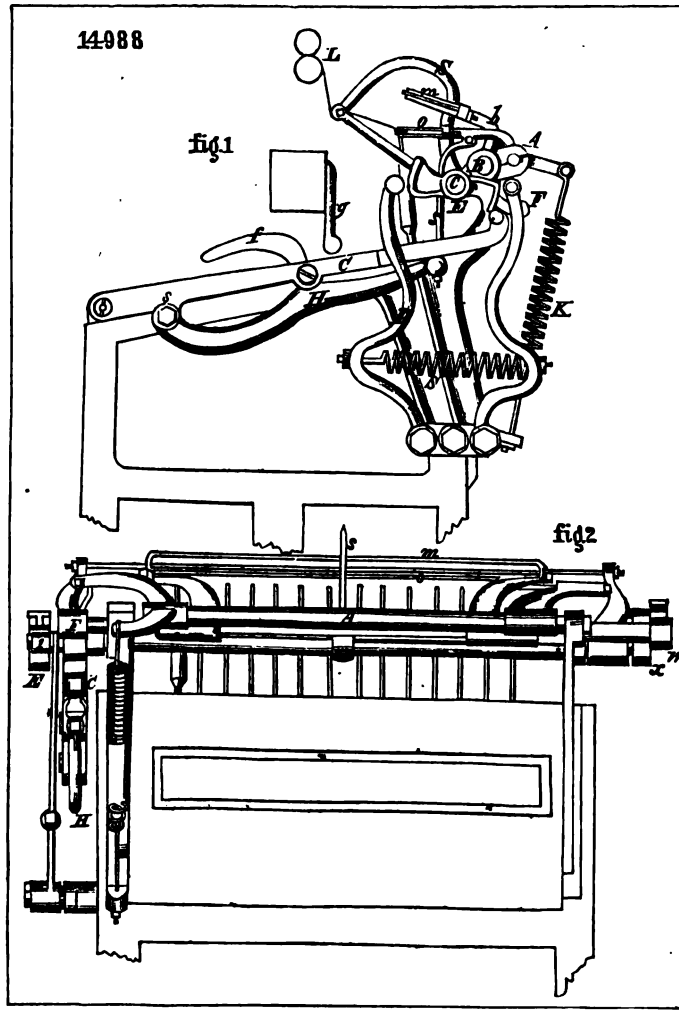

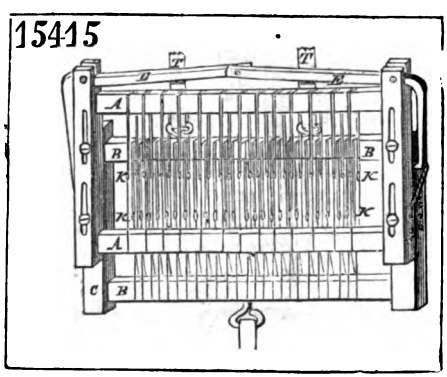

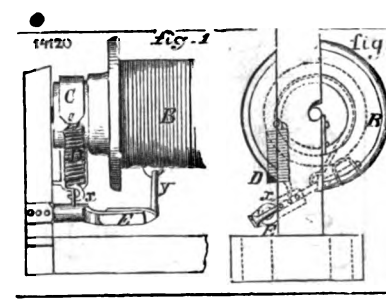

Digitized by Google

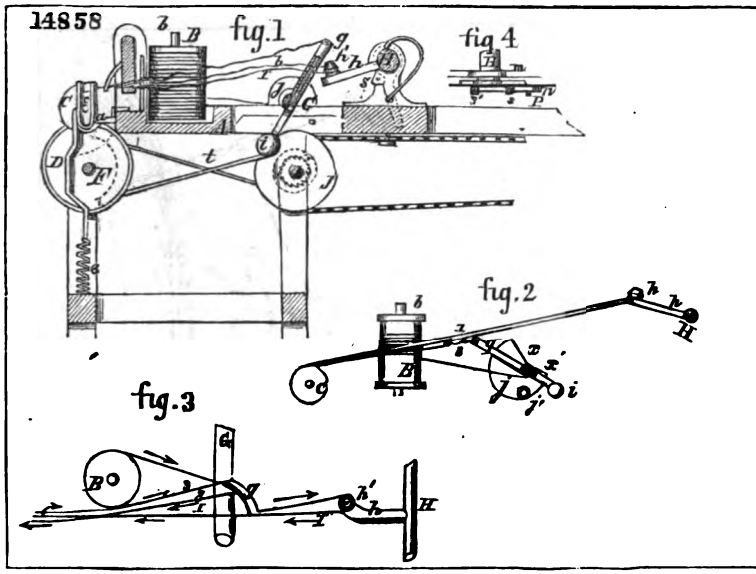

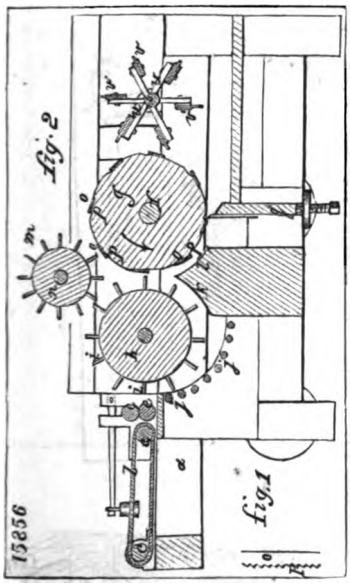

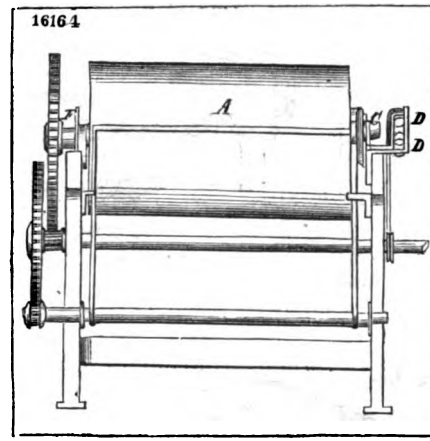

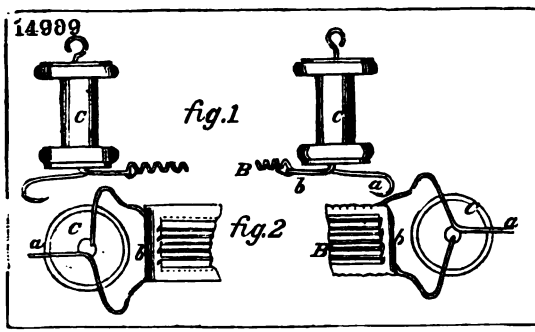

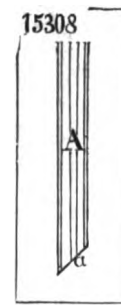

Digitized by Google

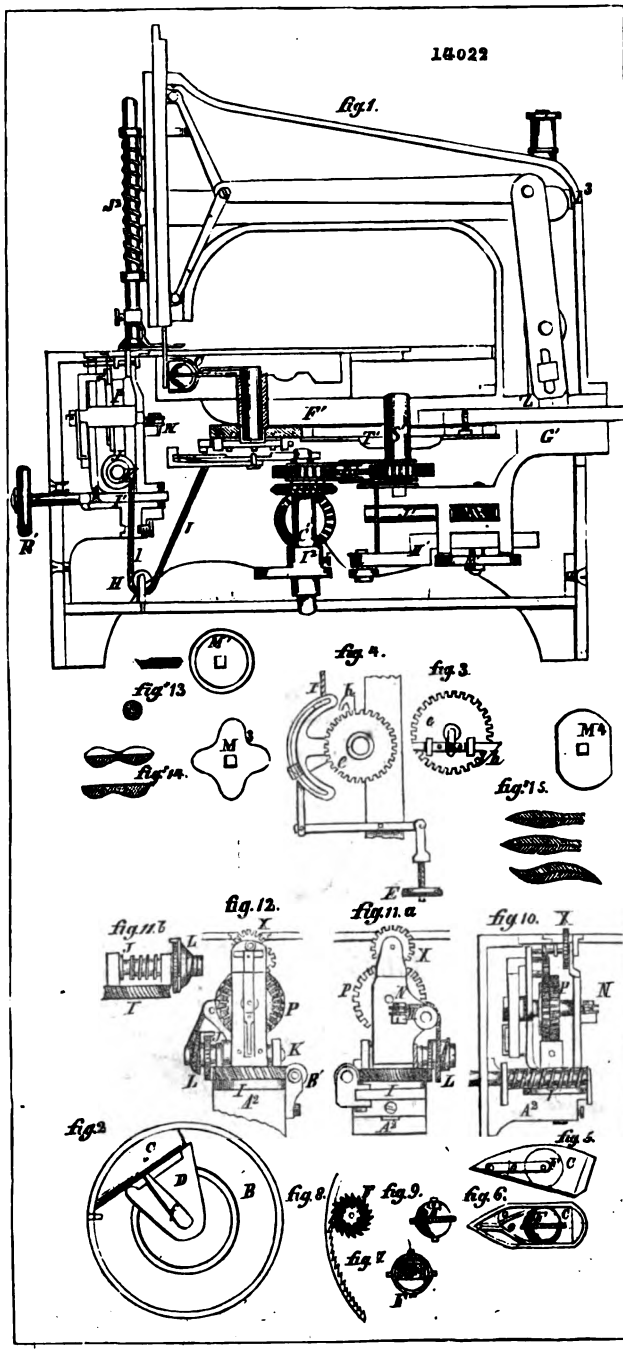

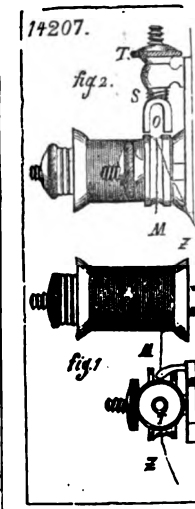

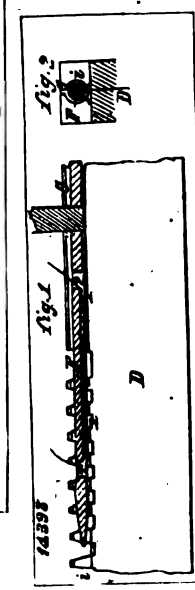

Digitized by Google

16136

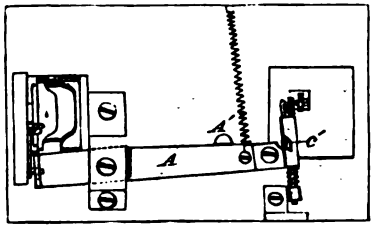

fig. 3

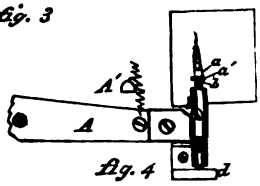

fig. 4

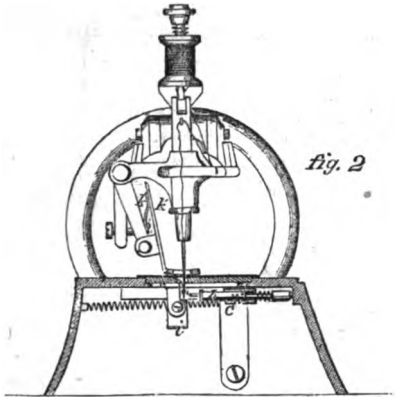

fig. 2

15469

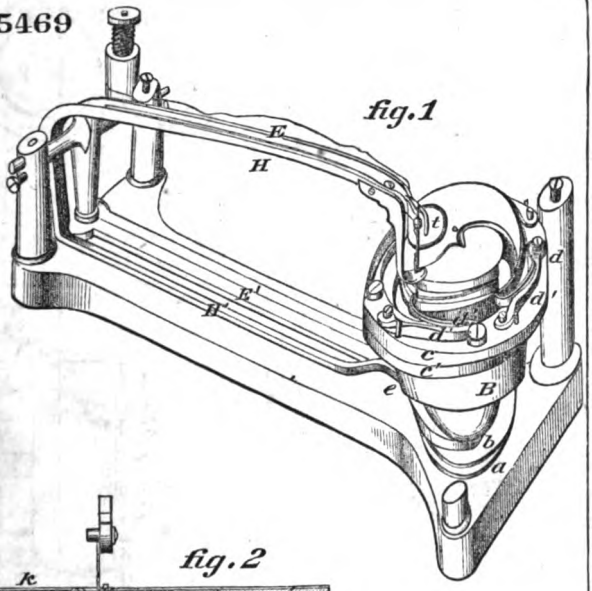

fig. 1

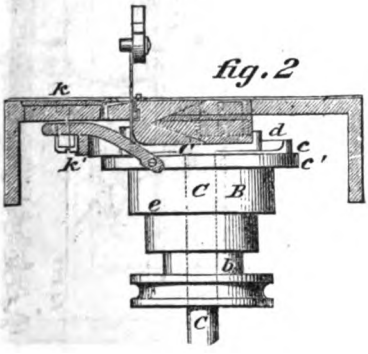

fig. 2

Digitized by Google

14141

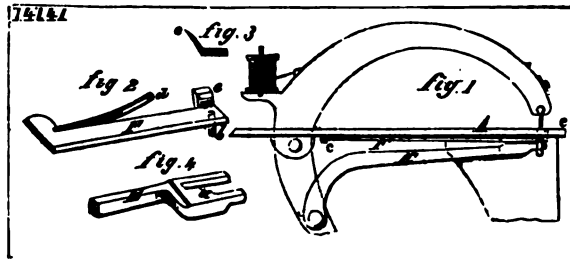

15635

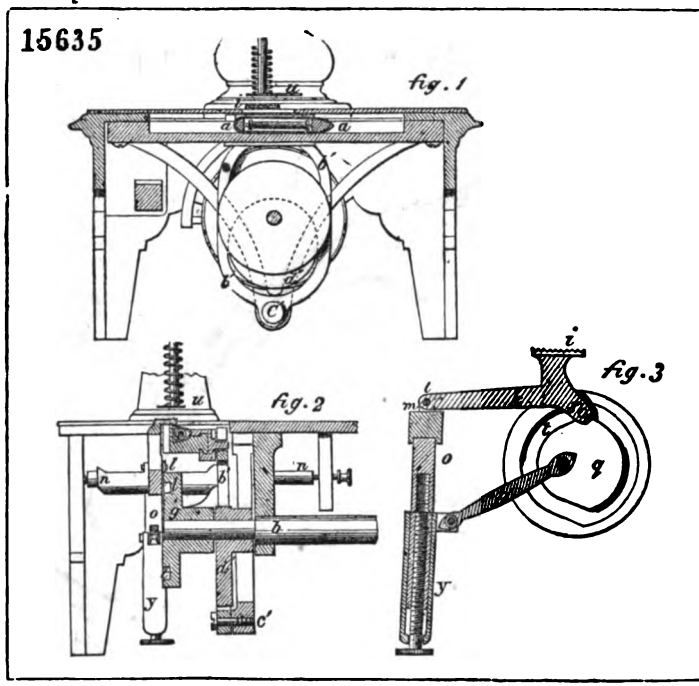

14475

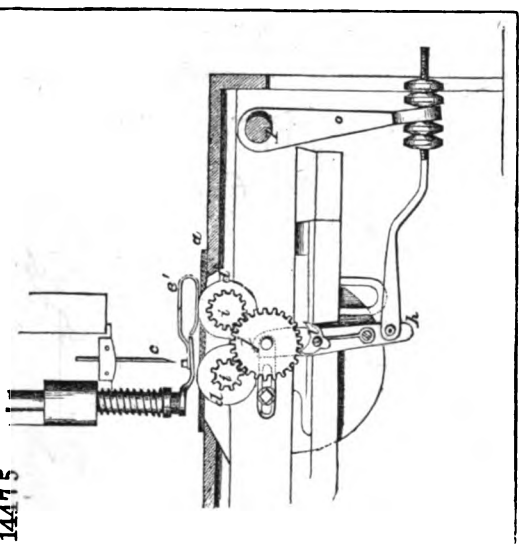

14324

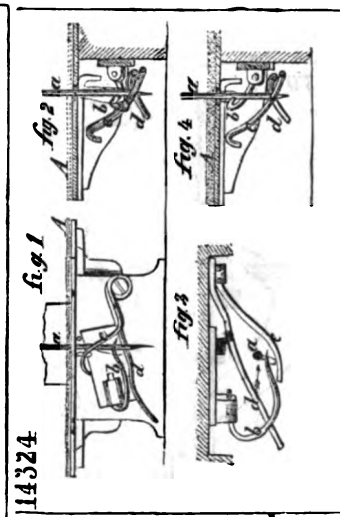

Digitized by Google

15170

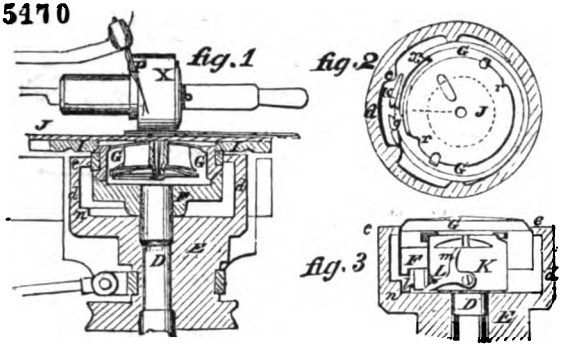

16026

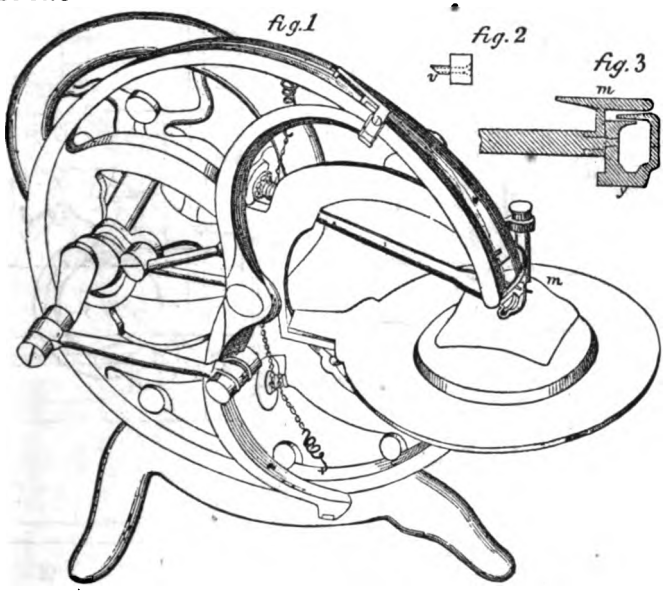

15396

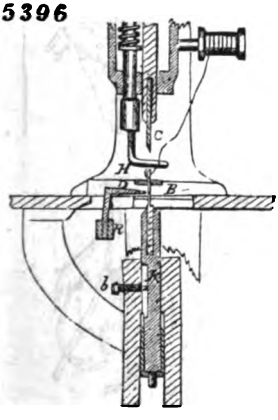

16030

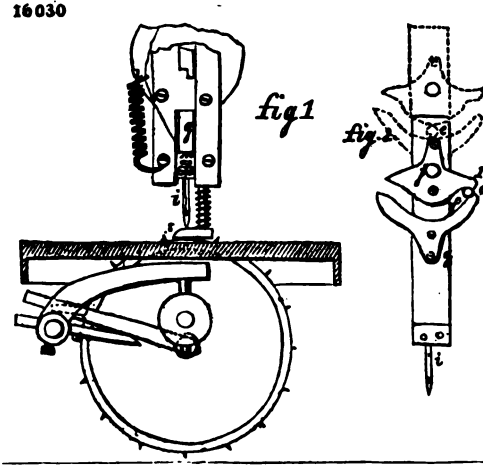

Digitized by Google

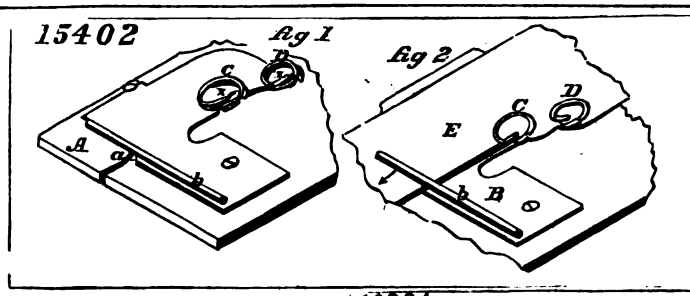

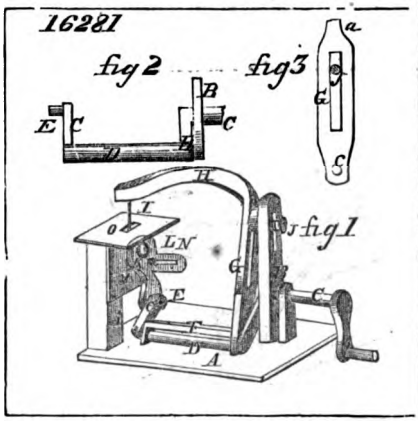

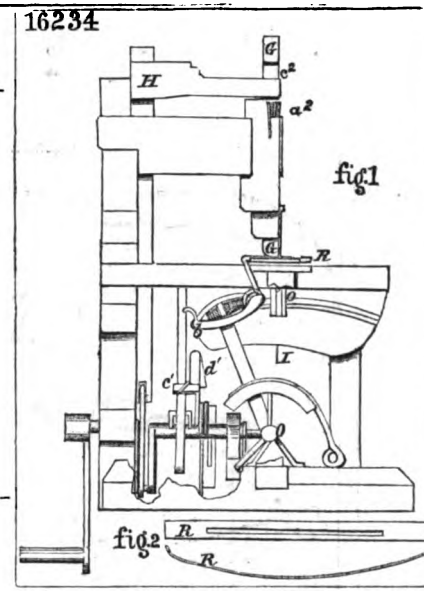

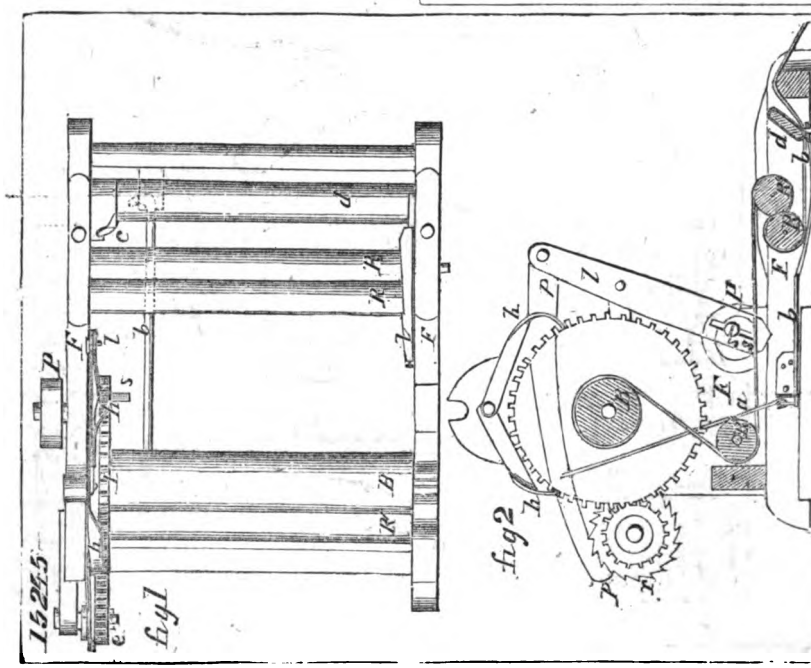

Digitized by Google

15020

fig 1

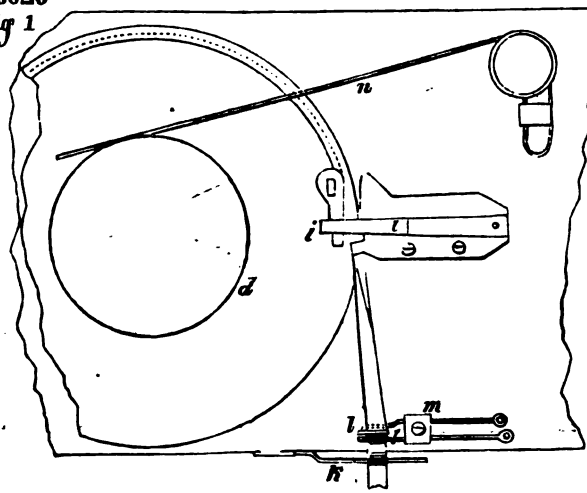

fig 2

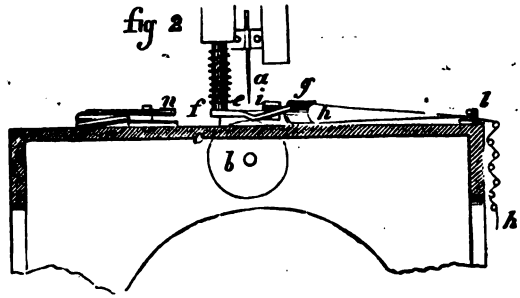

fig 3

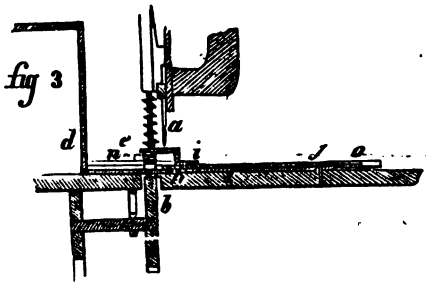

16029

fig.2

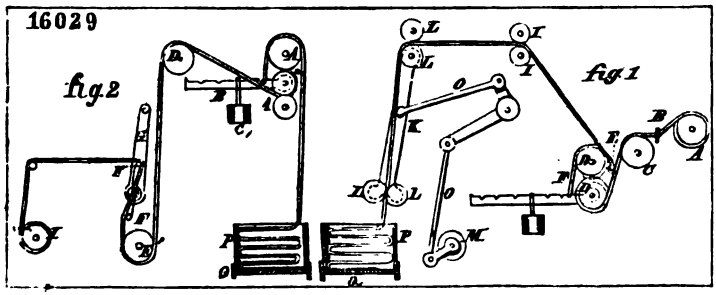

Digitized by Google

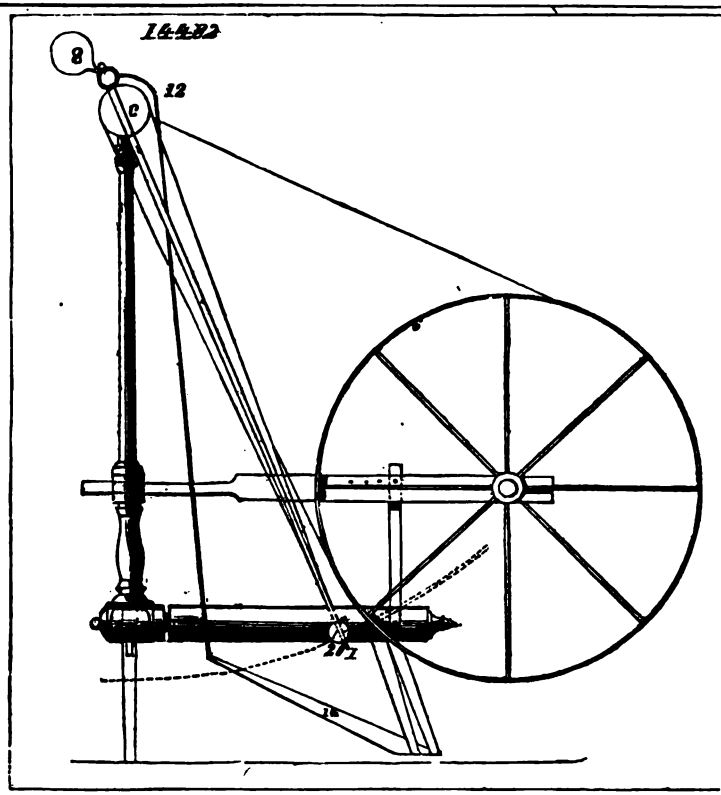

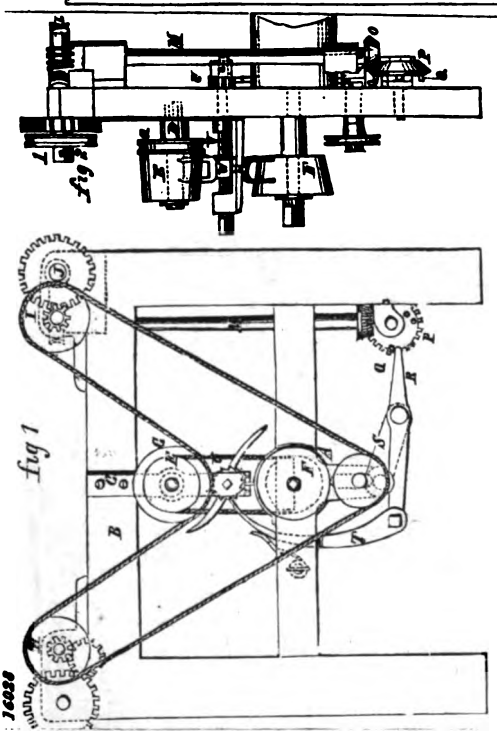

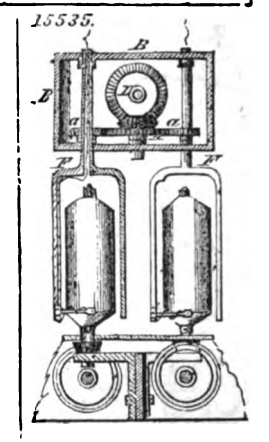

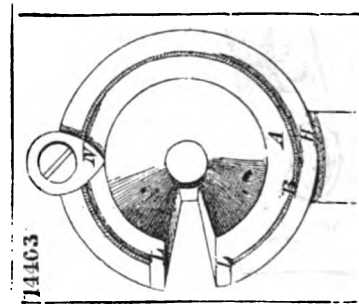

Digitized by Google

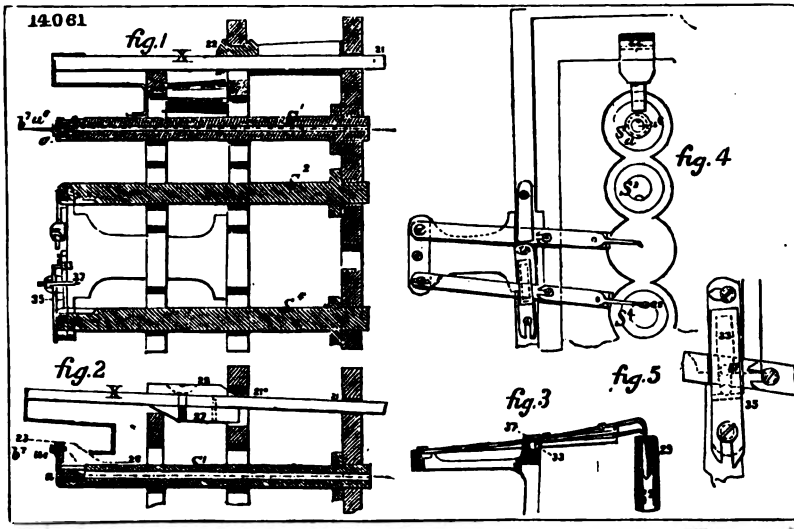

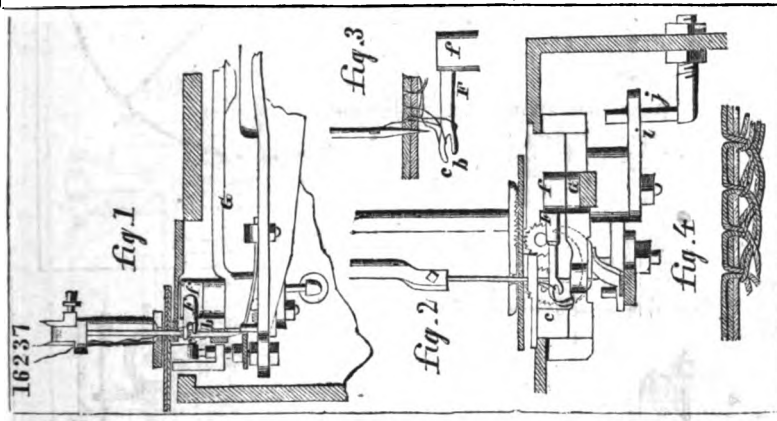

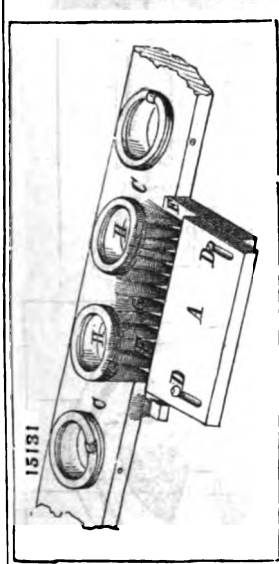

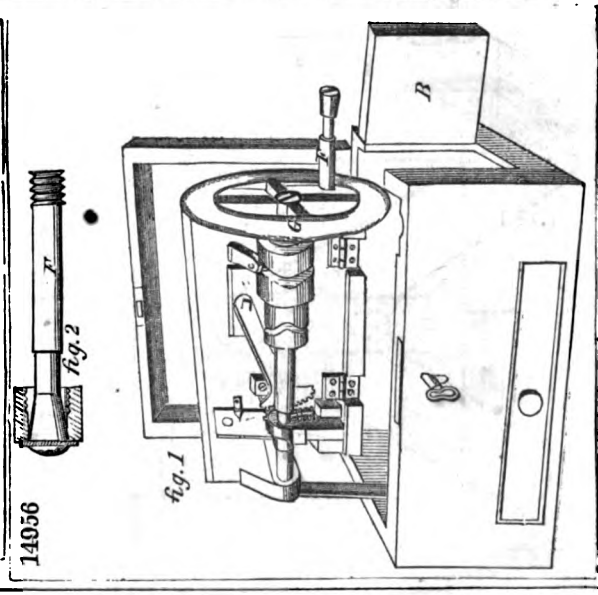

Digitized by Google

14988

fig 1

fig 2

15415

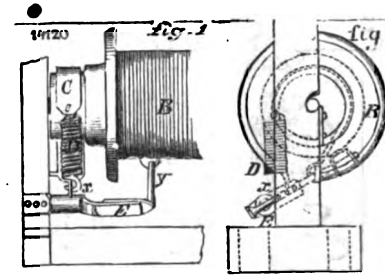

14858

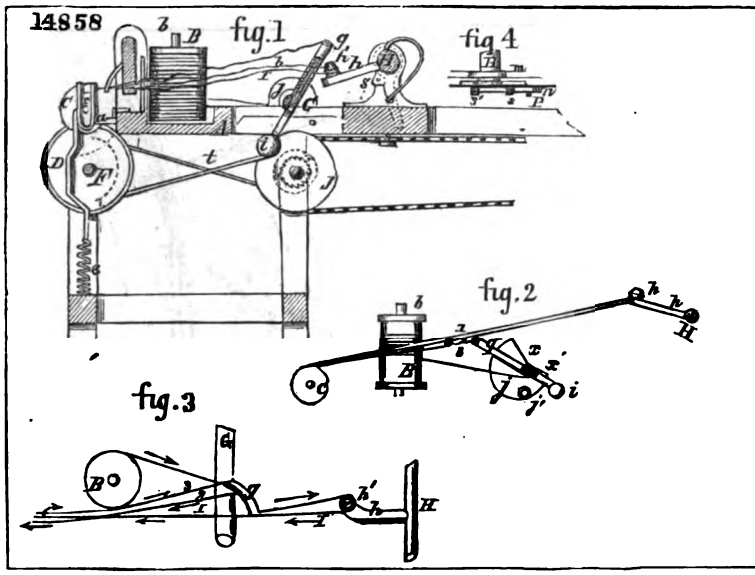

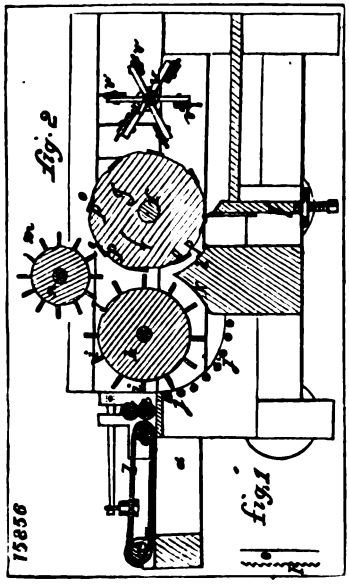

15856

16164

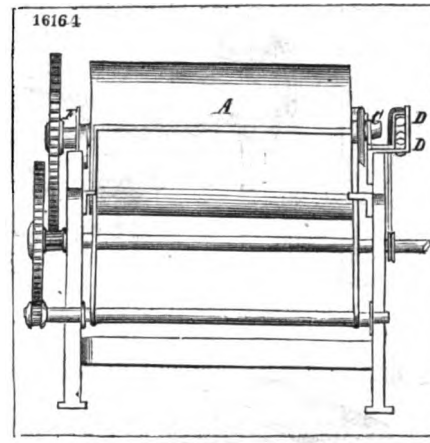

14909

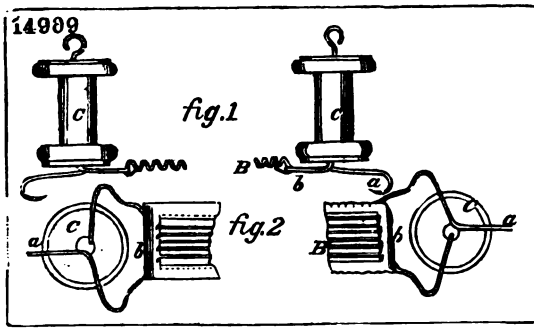

15308

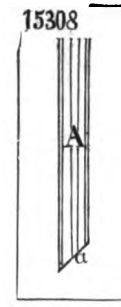

Digitized by Google

16248

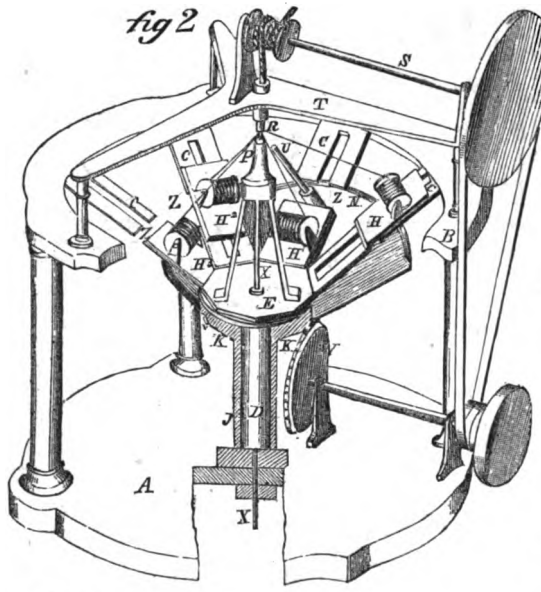

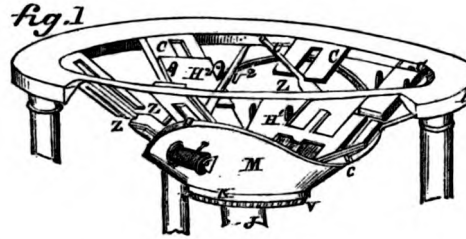

14815

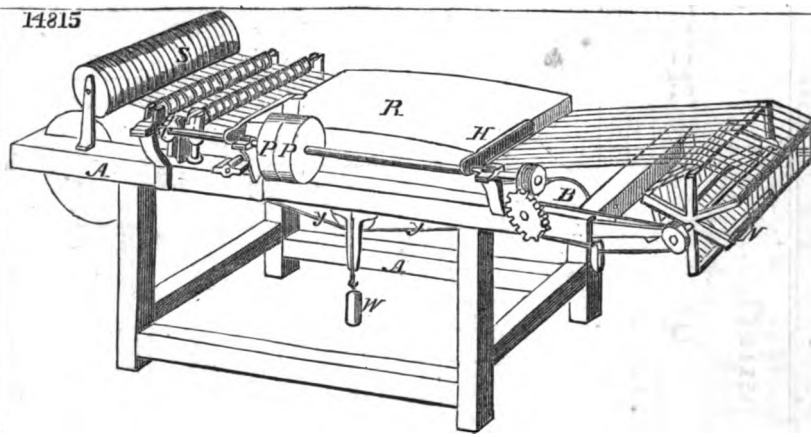

Digitized by Google

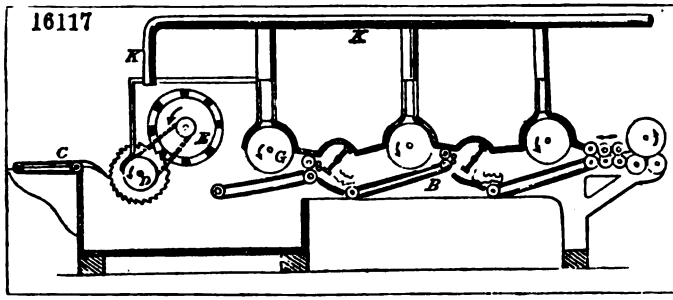

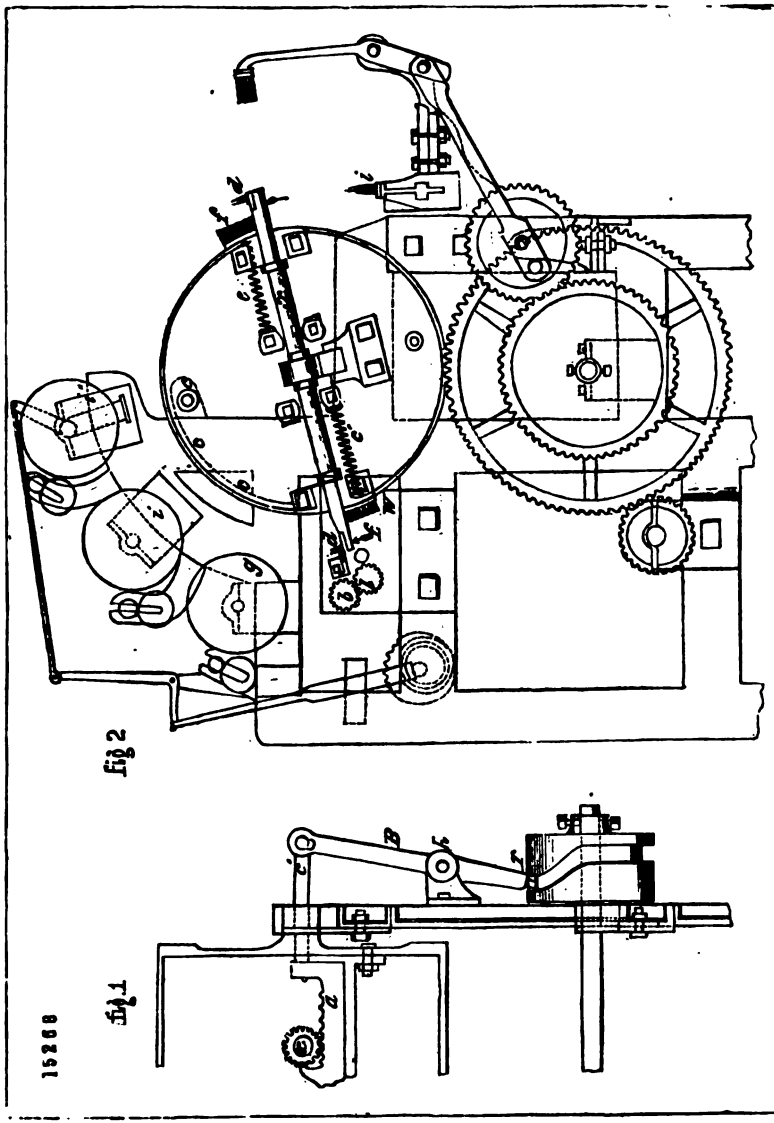

Digitized by Google

15662

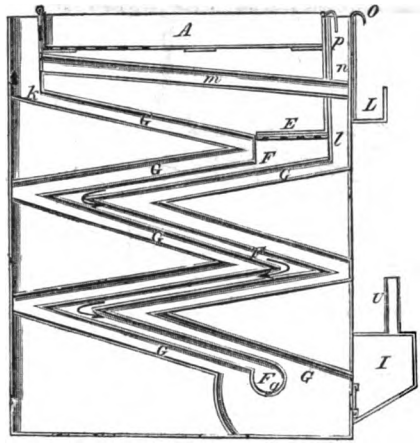

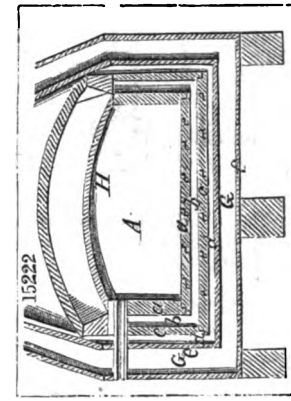

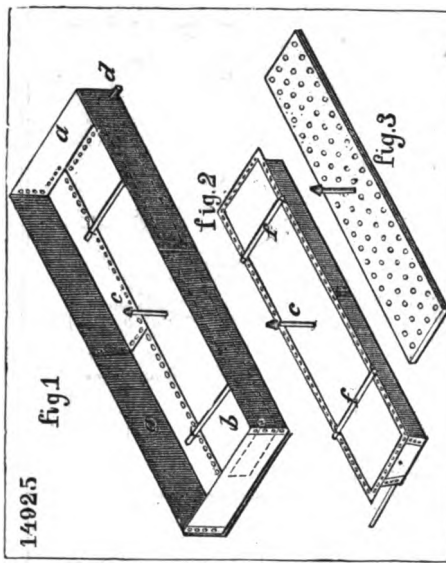

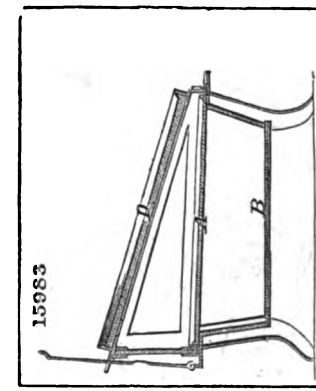

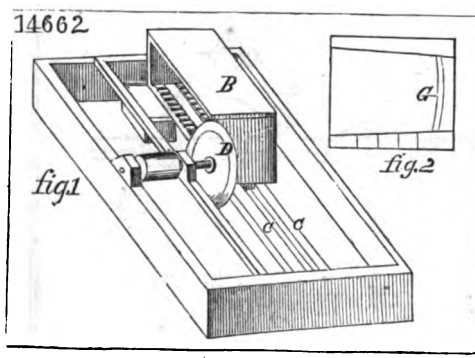

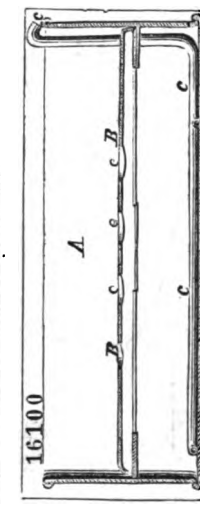

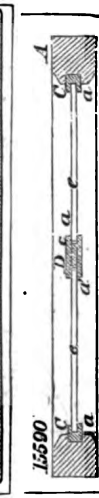

Digitized by Google

16211

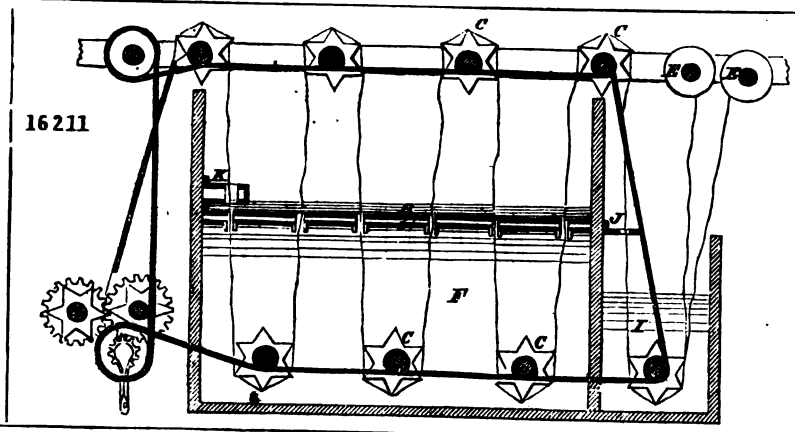

14376

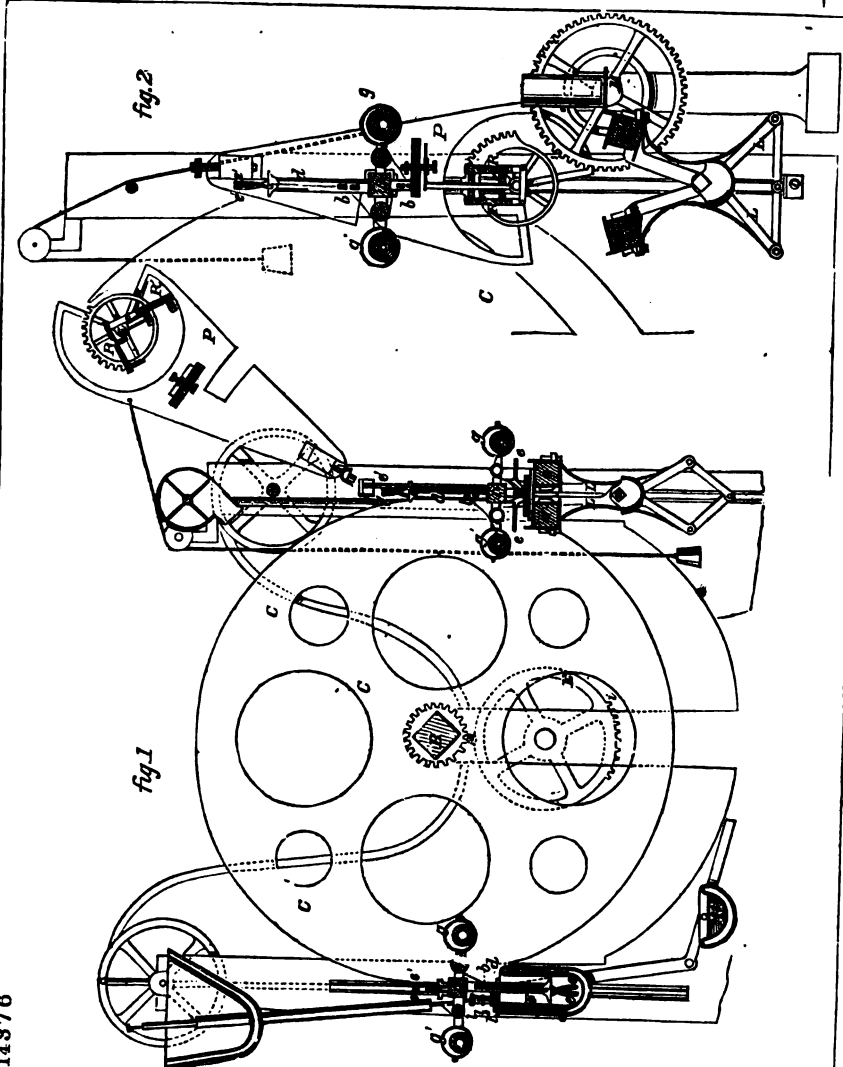

Digitized by Google

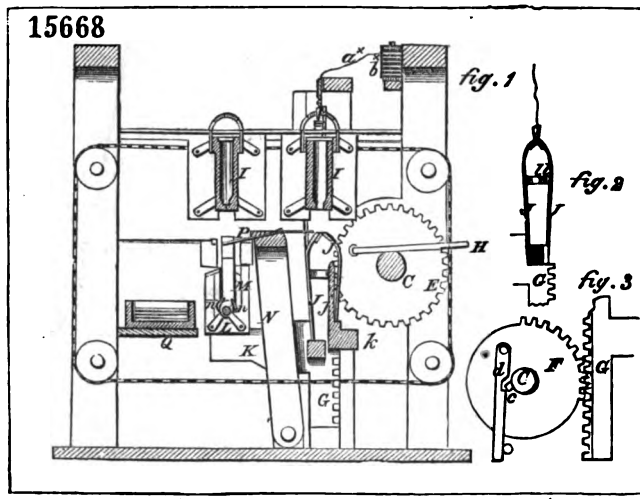

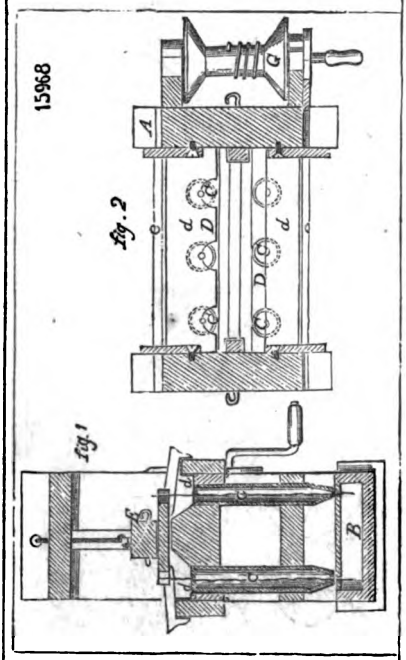

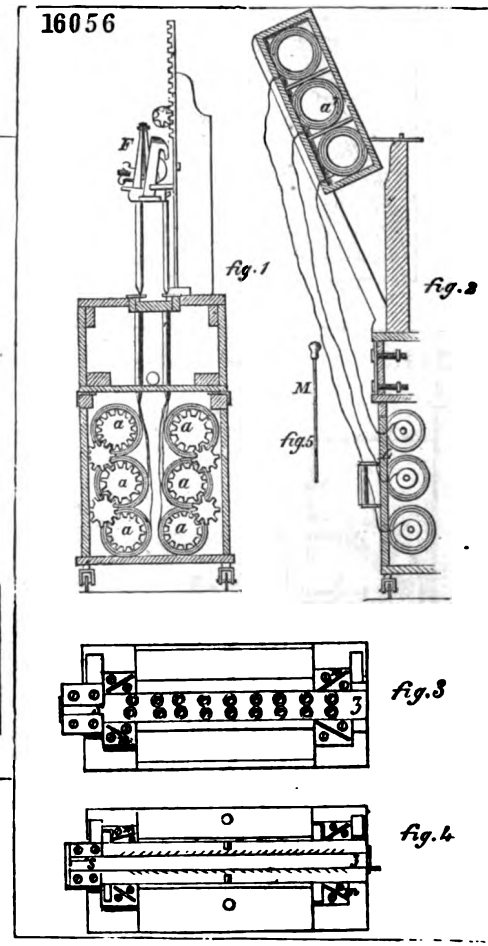

Digitized by Google

14397

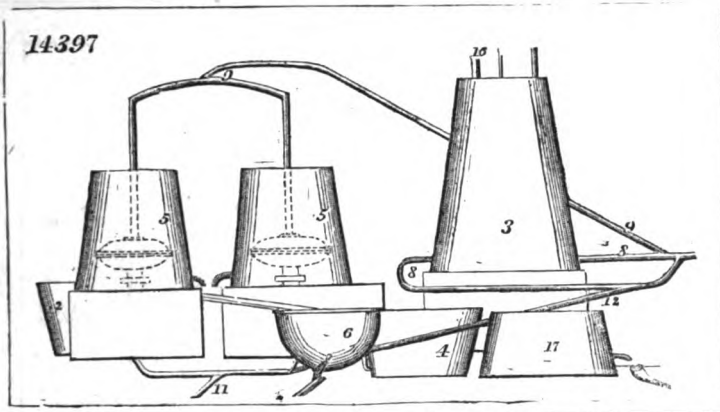

16304

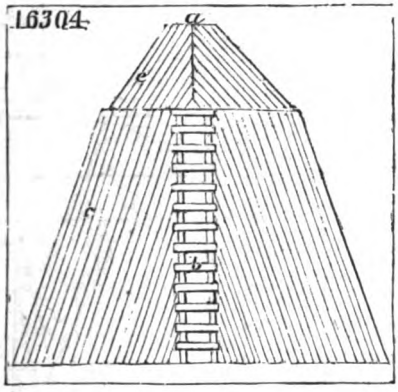

16129

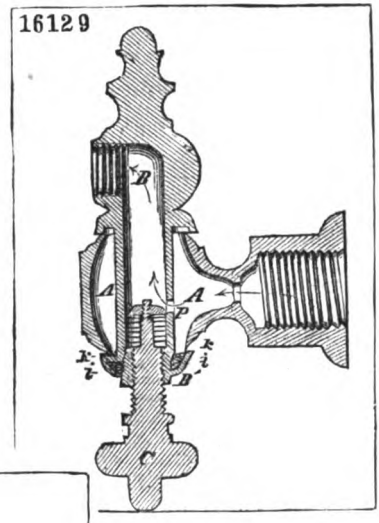

14418

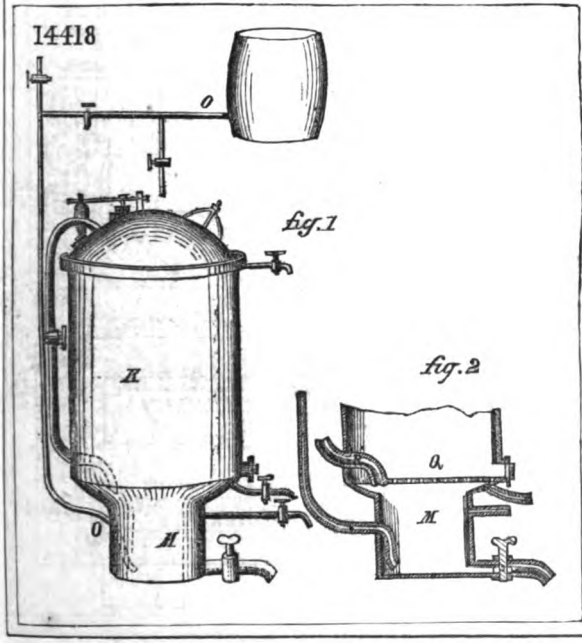

15959

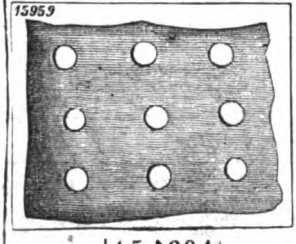

15821

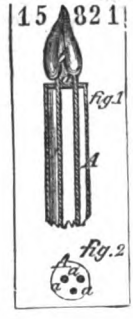

Digitized by Google

15267

fig.1

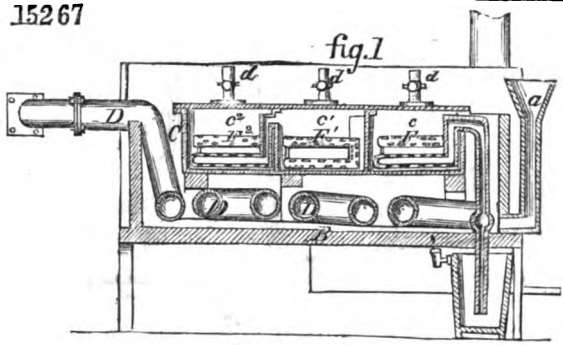

fig.2

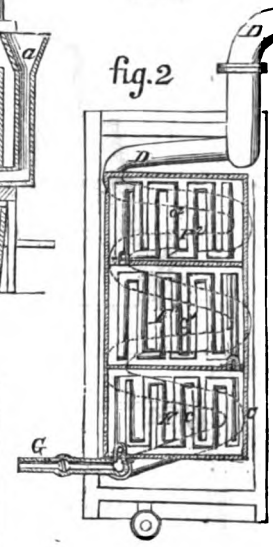

14926

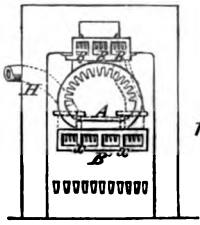

fig.1

fig.2

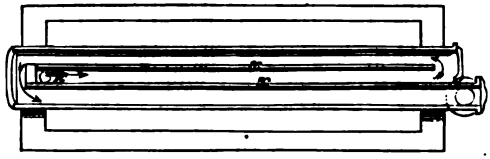

fig.3

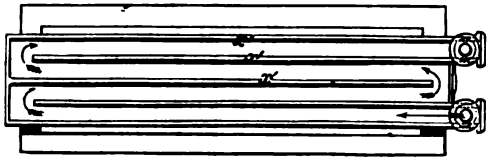

15973

fig.1

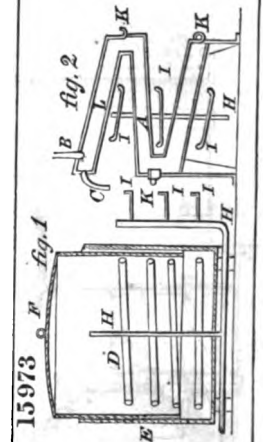

fig.2

14388

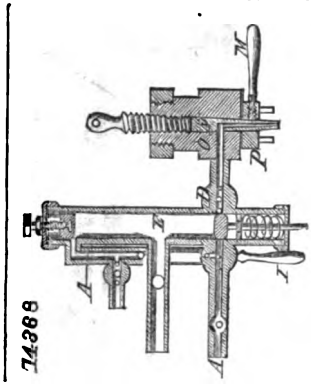

14045

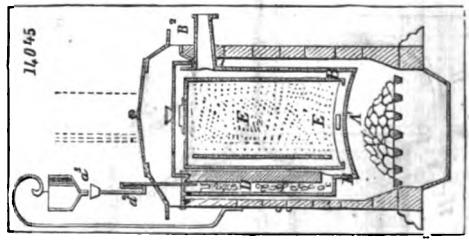

Digitized by Google

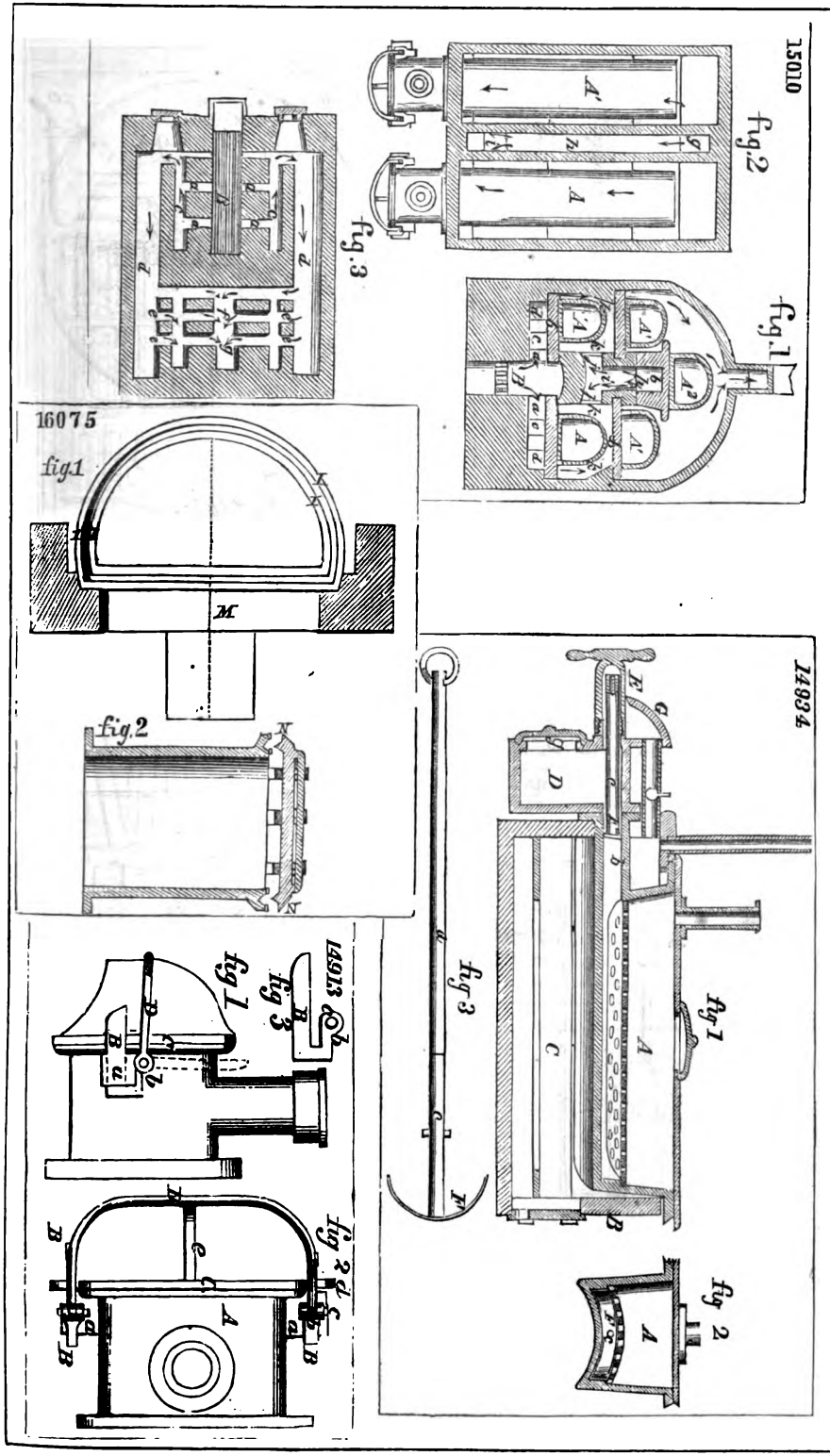
15010
fig.1
fig.2
fig.3
16075
fig.1
fig.2
14934
fig 1
fig 2
fig 3
14913
fig 1
fig 2
fig 3

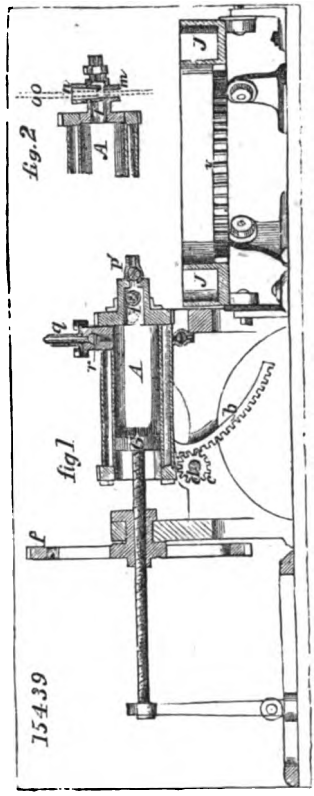

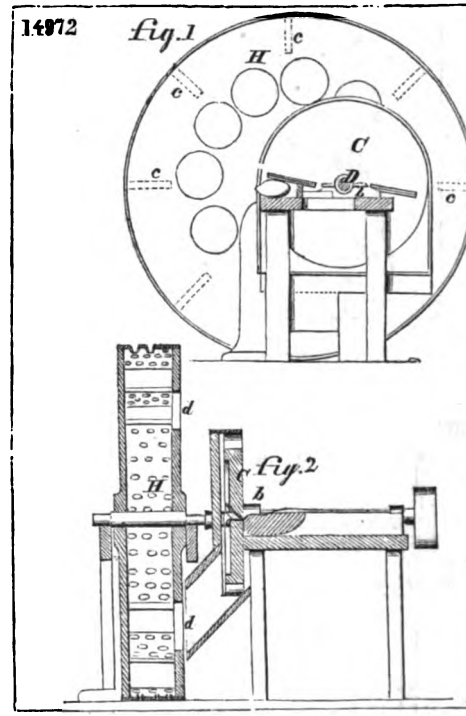

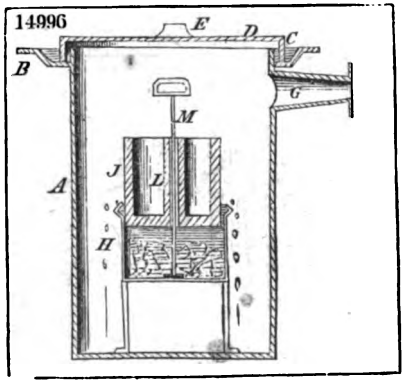

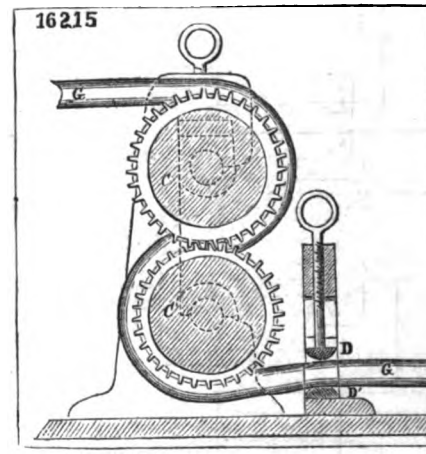

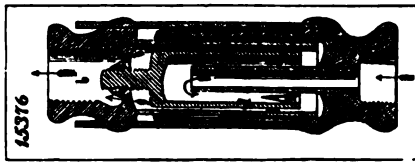

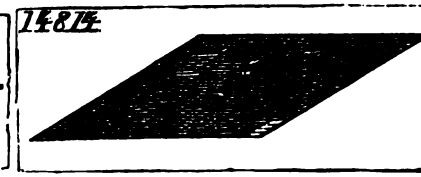

Digitized by Google

15086

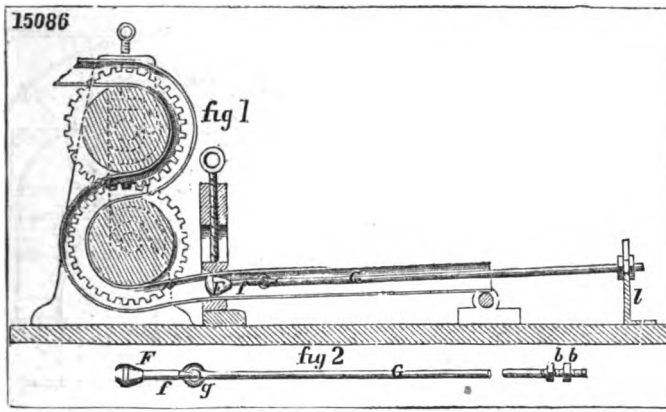

15087

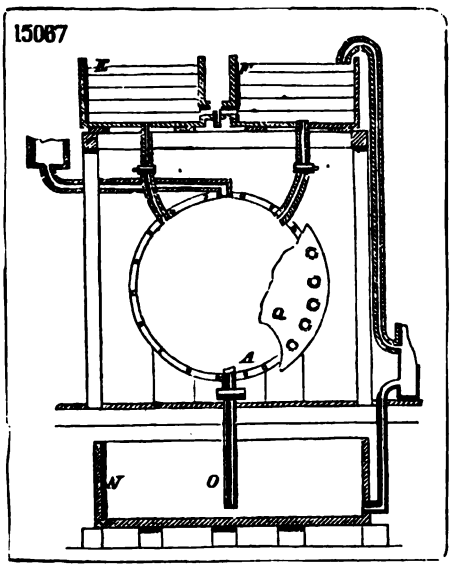

15947

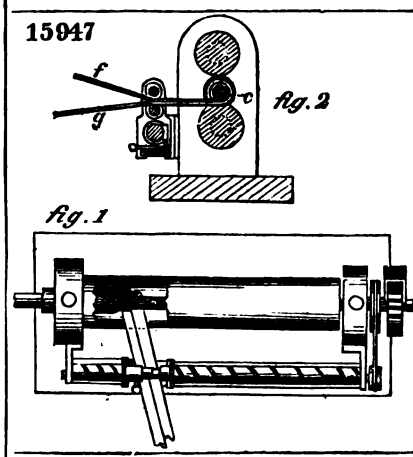

14929

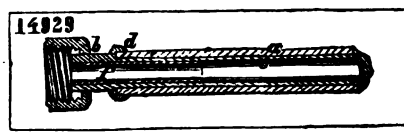

15087

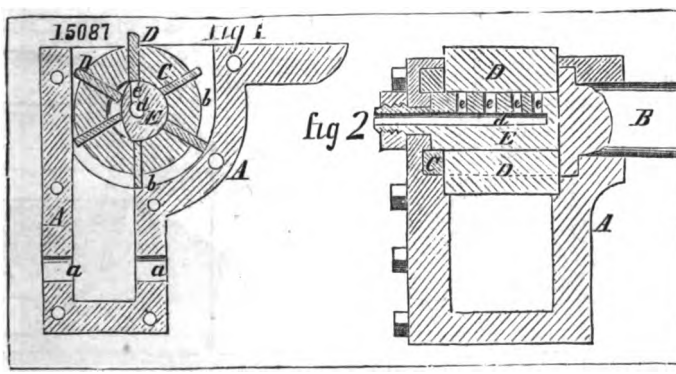

Digitized by Google

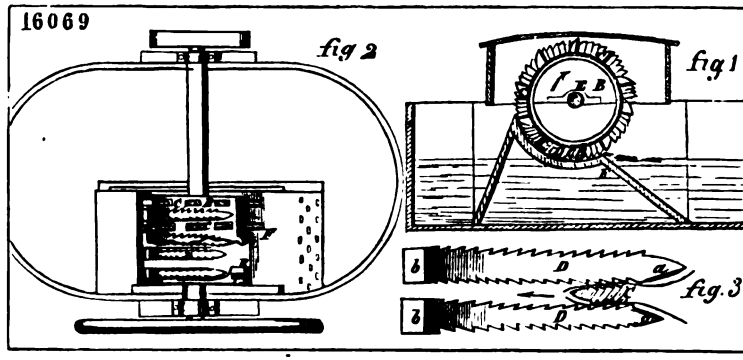

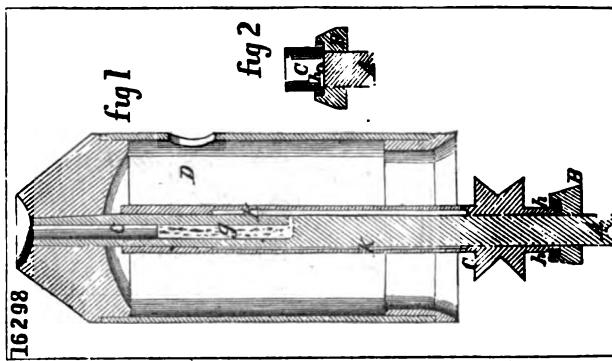

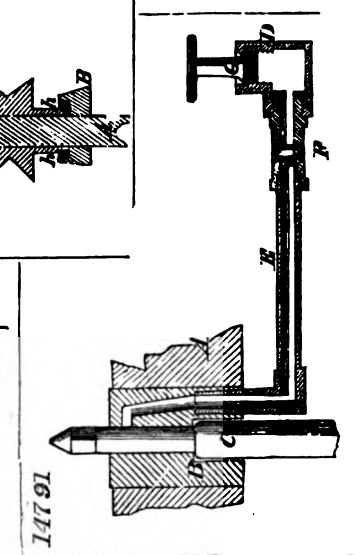

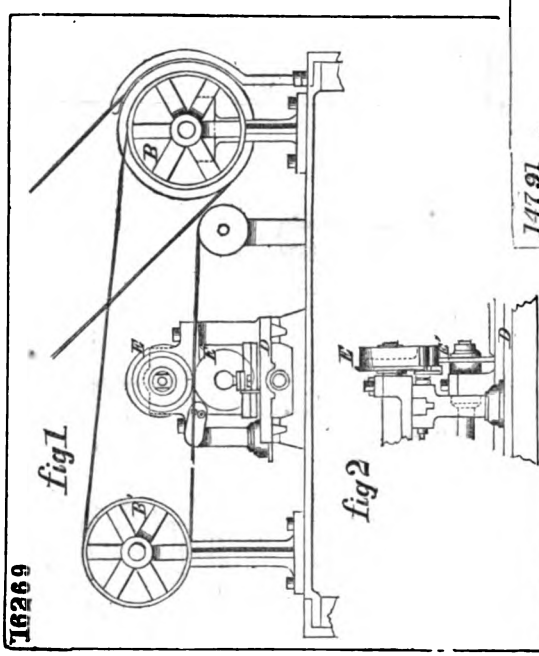

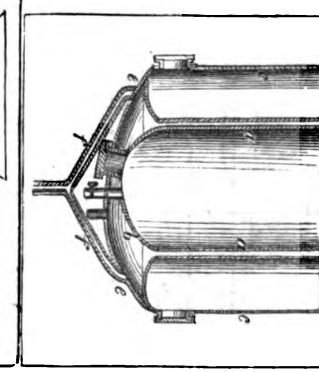

Digitized by Google

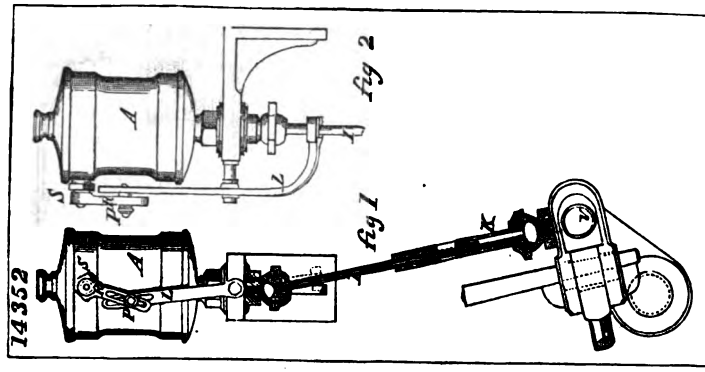

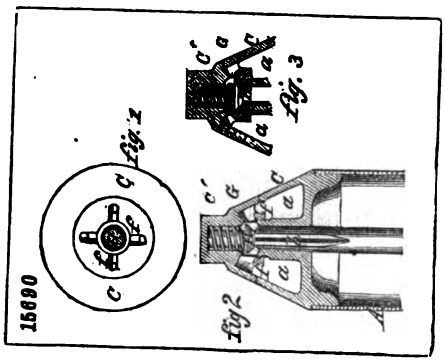

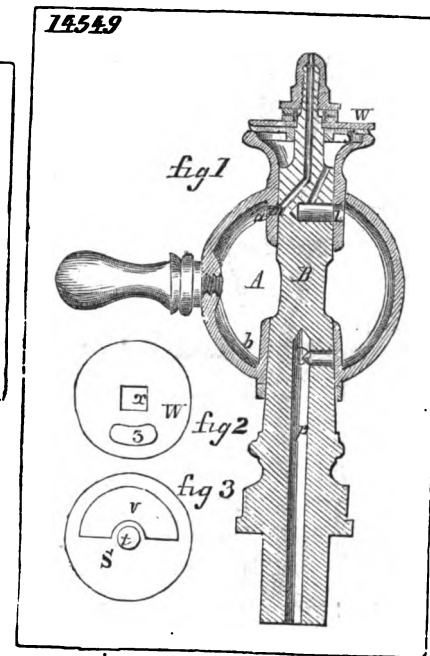

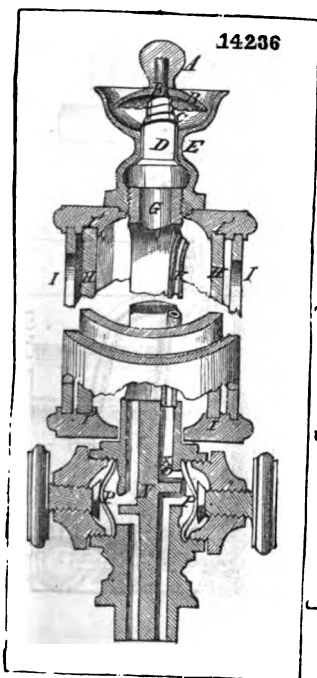

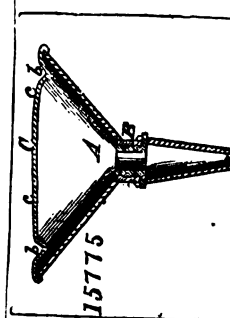

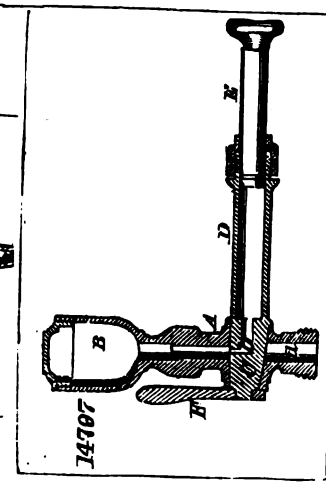

Digitized by Google

16018

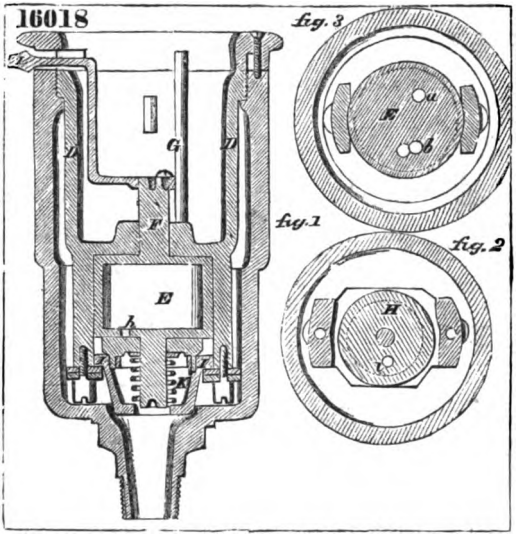

16255

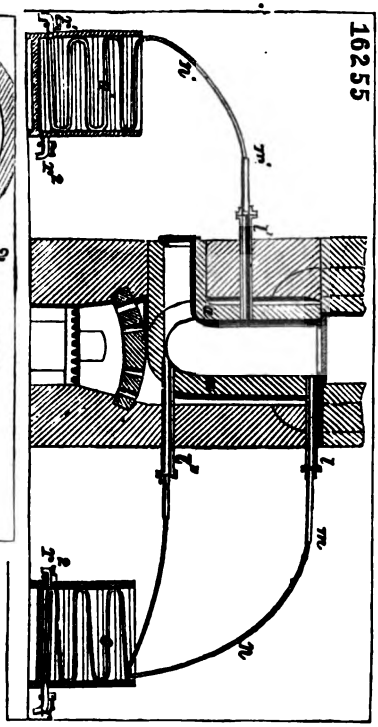

15642.

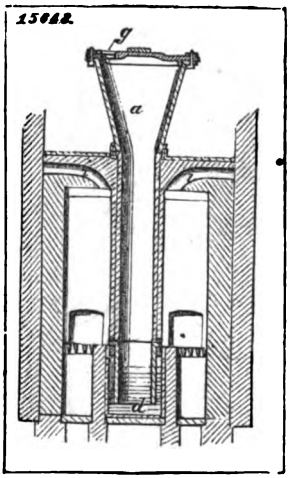

15642

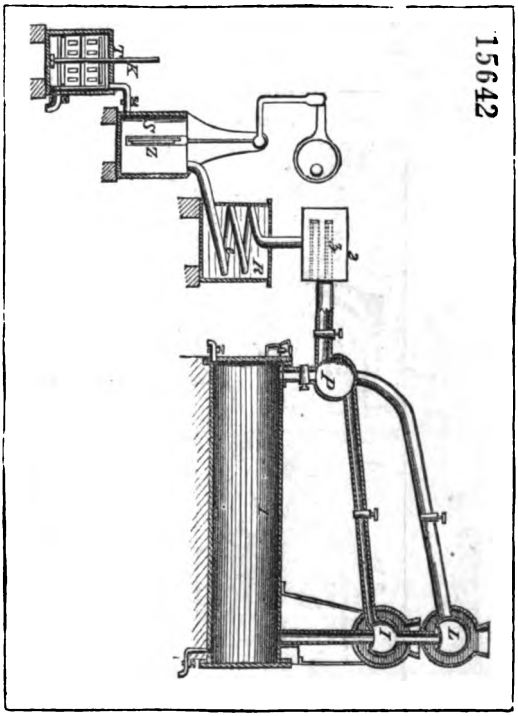

15553

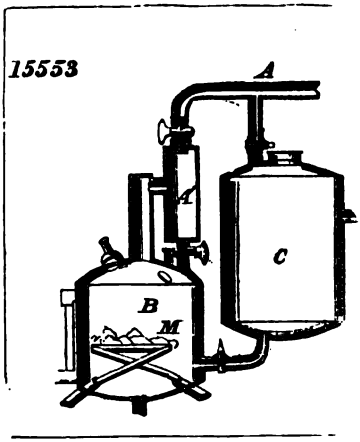

Digitized by Google

14457

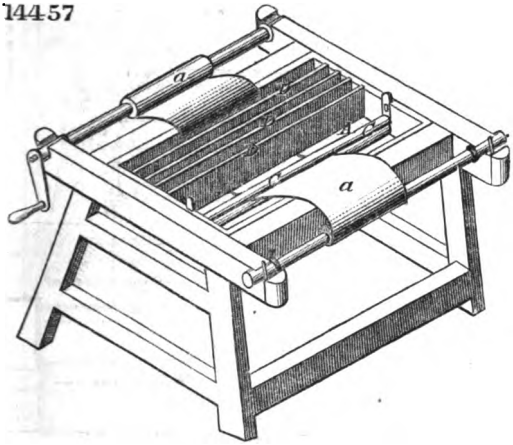

15594

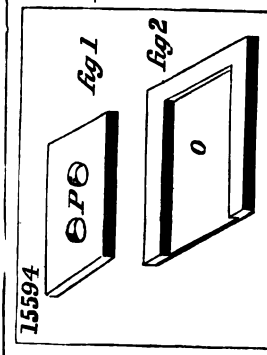

15542

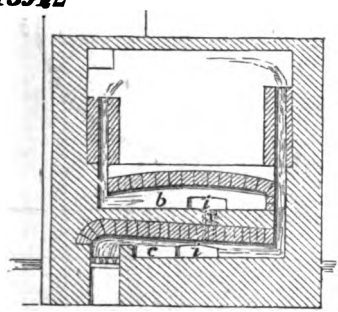

16179

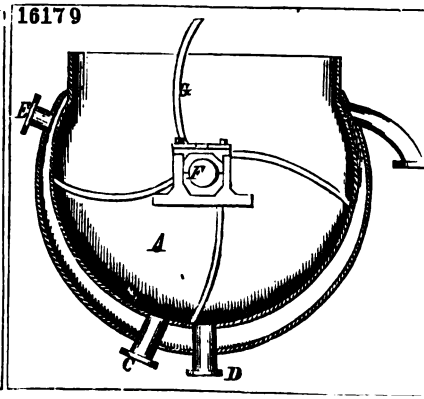

15598.

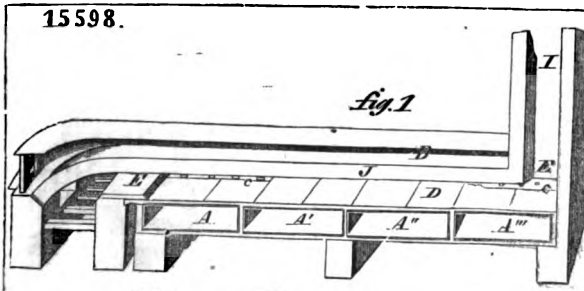

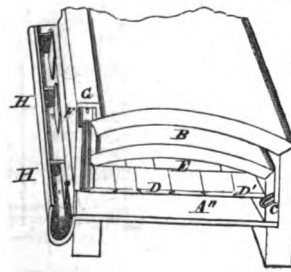

Digitized by Google

14813

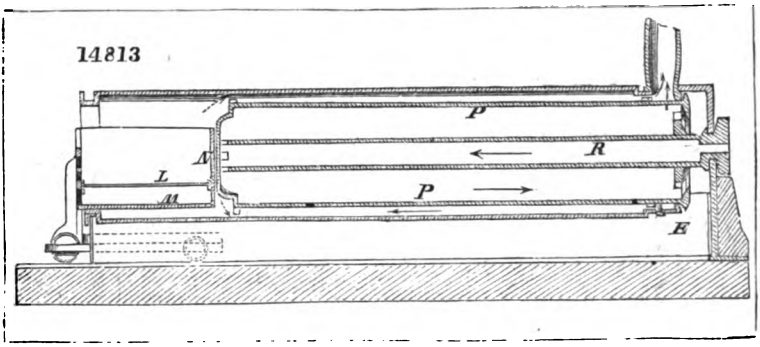

15411

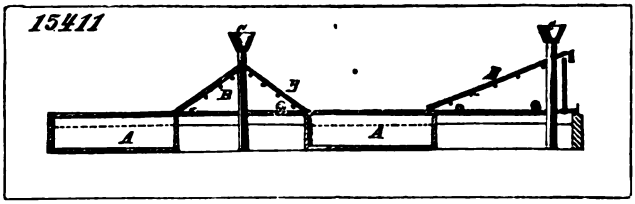

15432

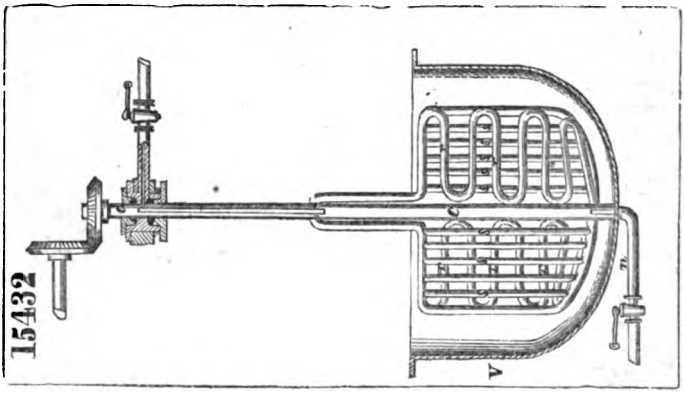

15975

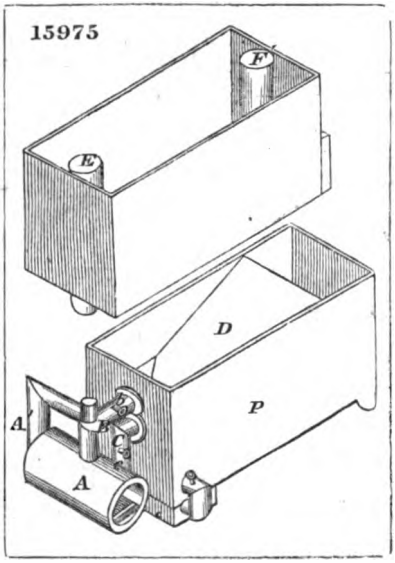

15884

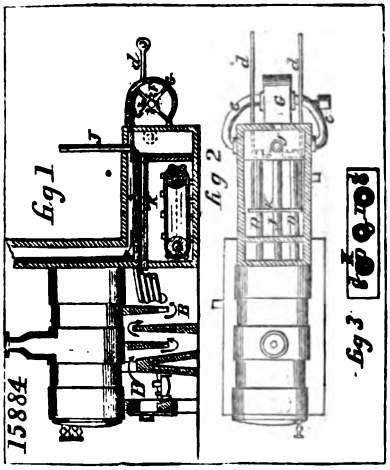

Digitized by Google

14717

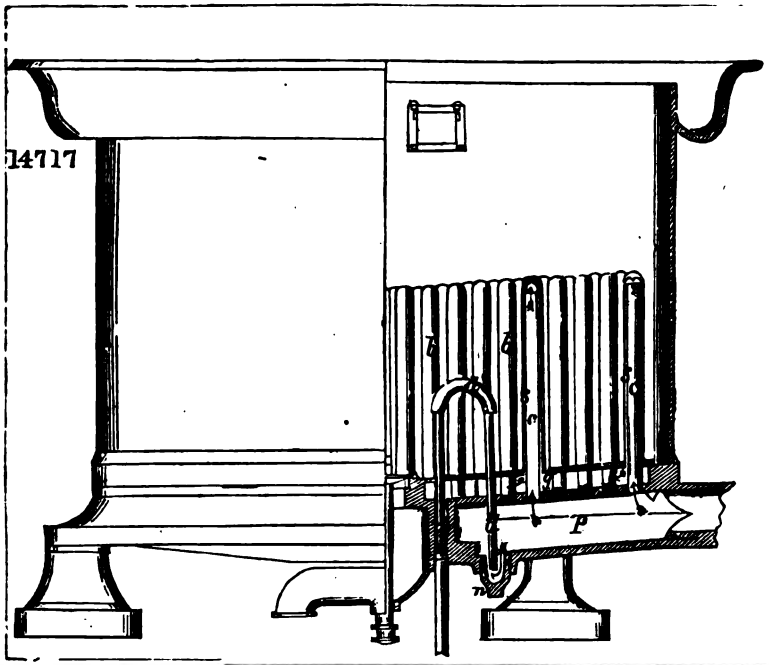

15694

fig 1

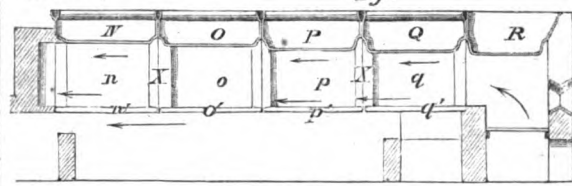

fig 2

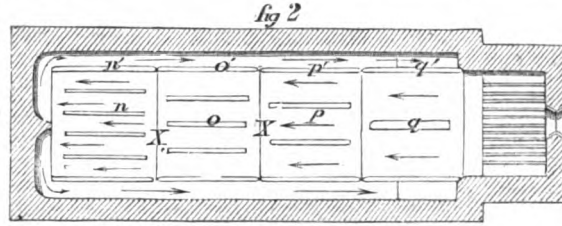

15838.

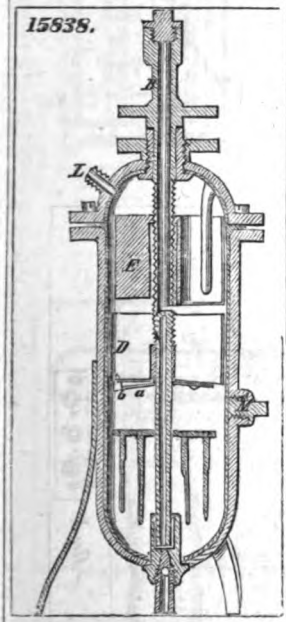

16051

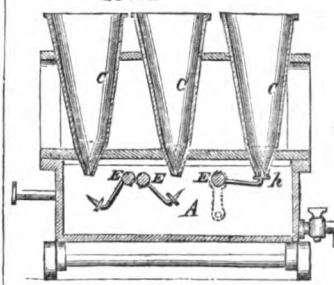

Digitized by Google

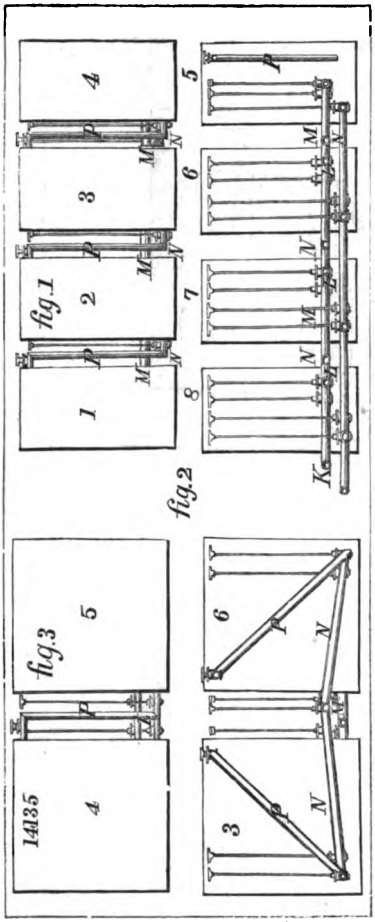

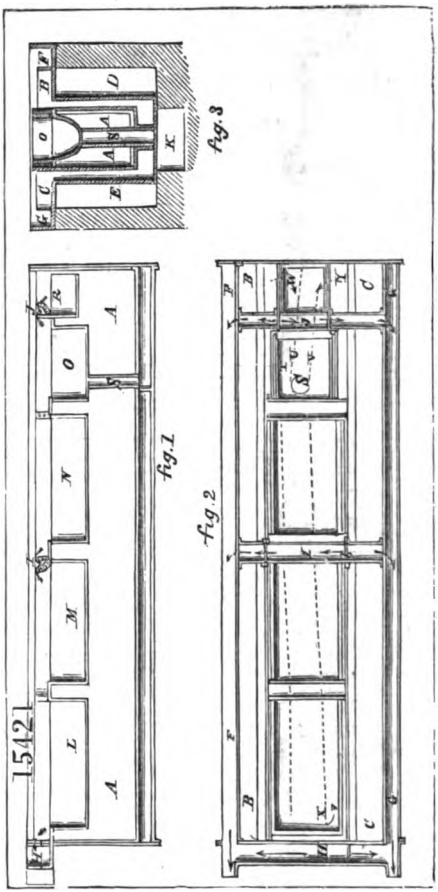

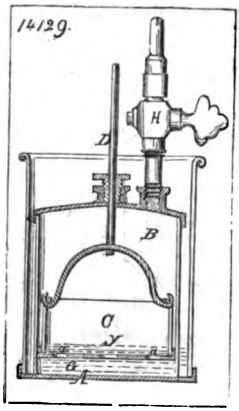

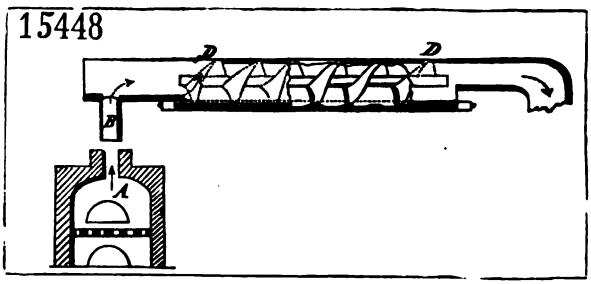

Digitized by Google

14271

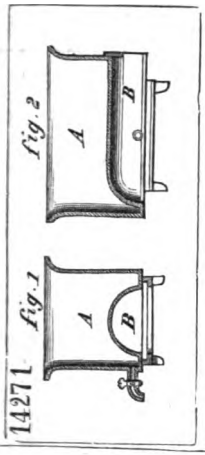

15155

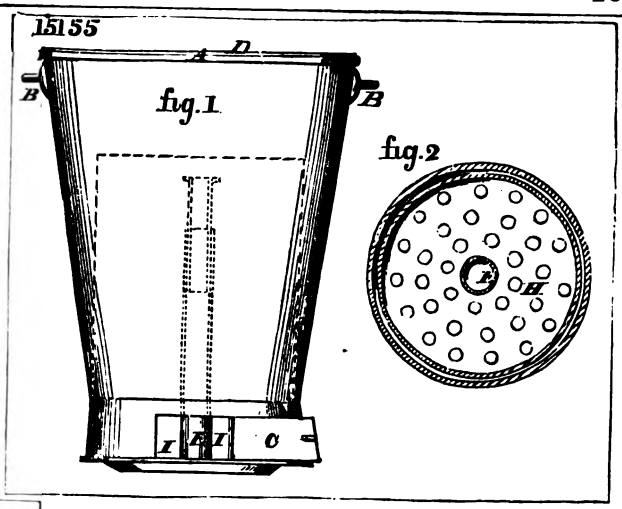

15774

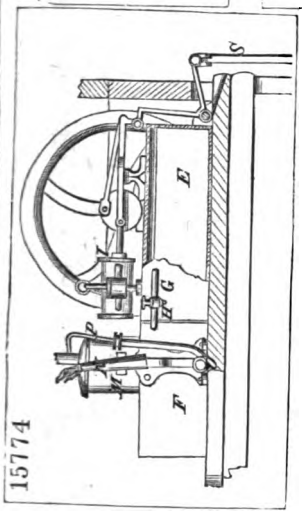

14875

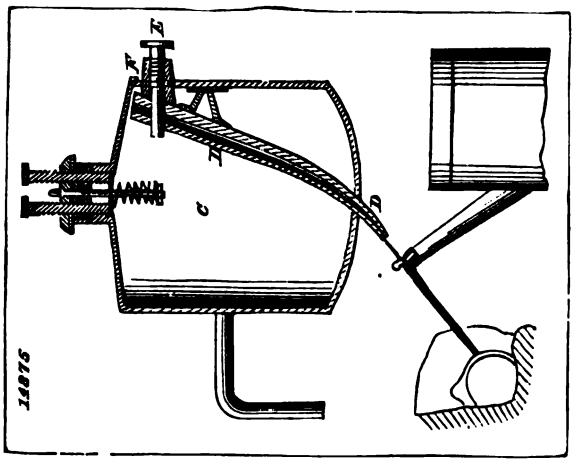

15633

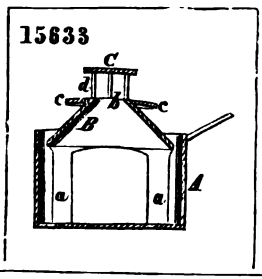

14386

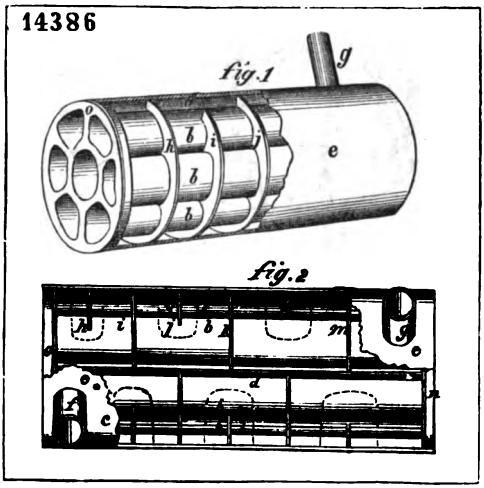

14403

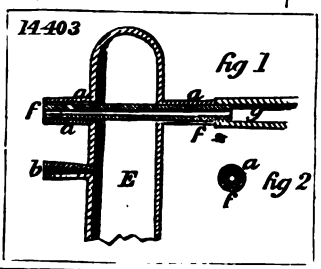

Digitized by Google

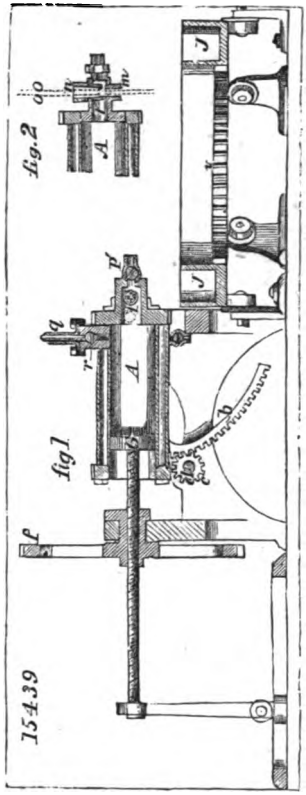

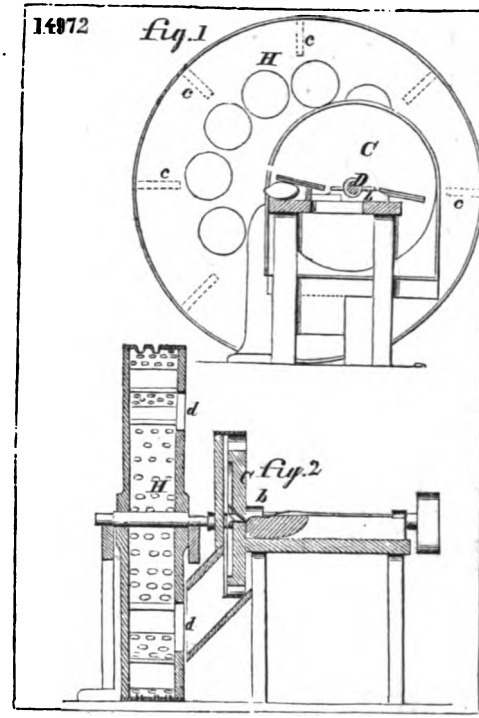

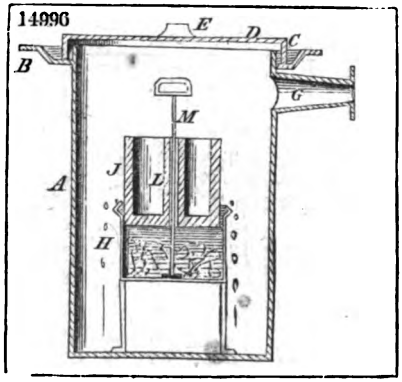

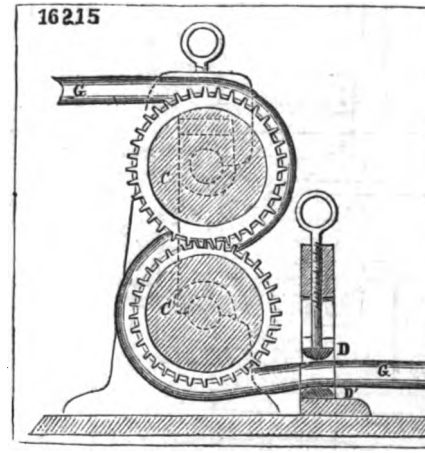

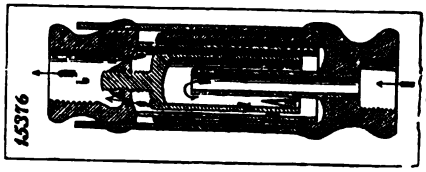

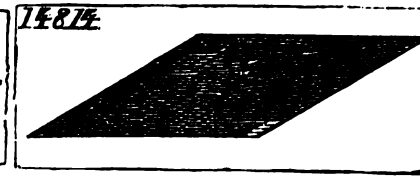

Digitized by Google

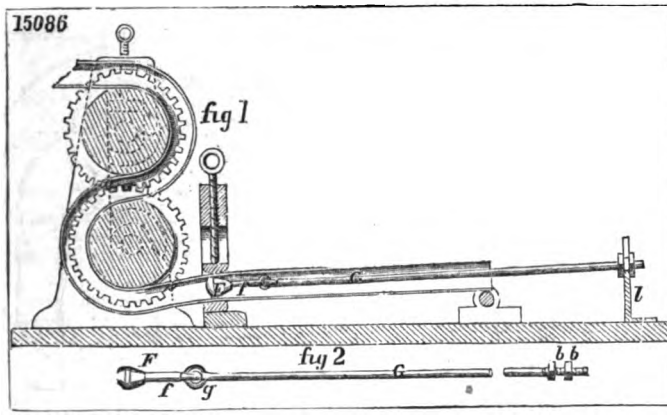

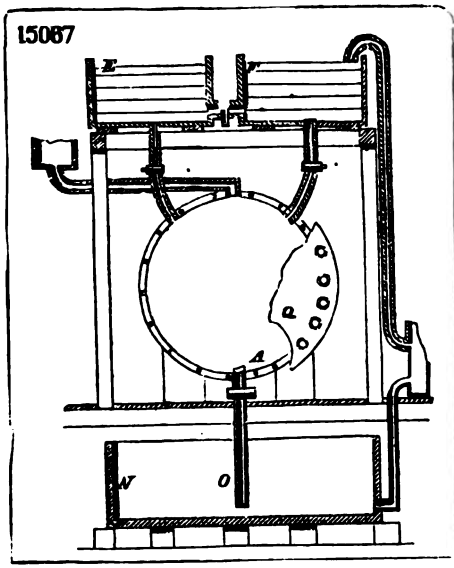

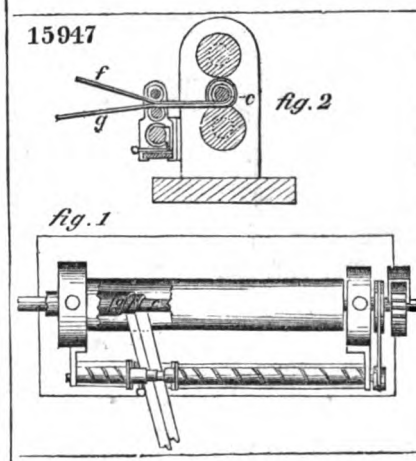

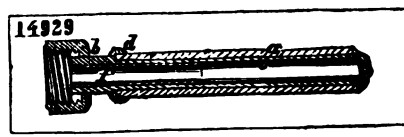

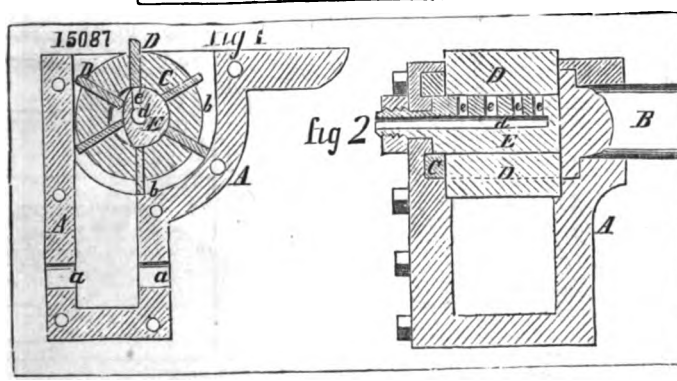

Digitized by Google

16069

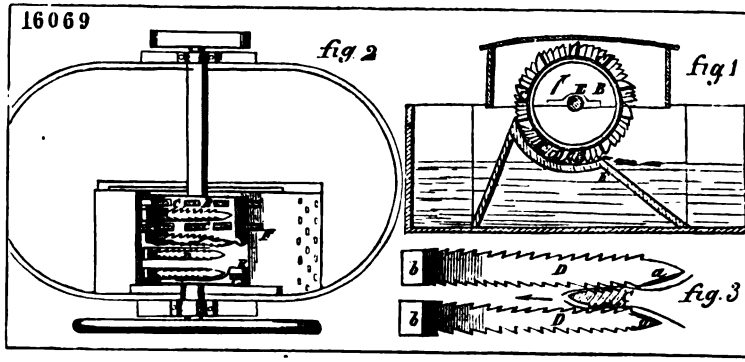

16298

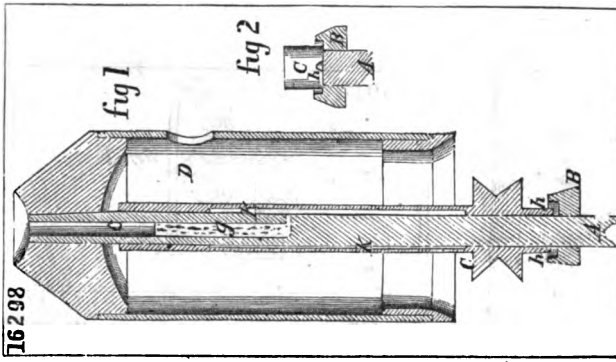

14791

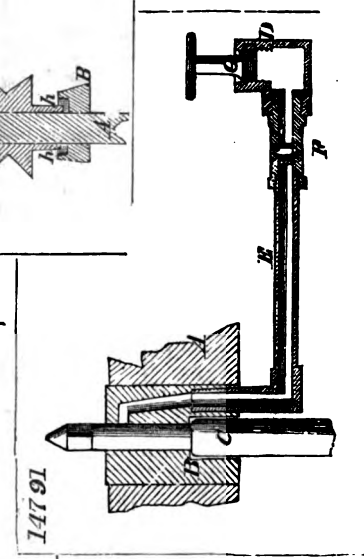

16269

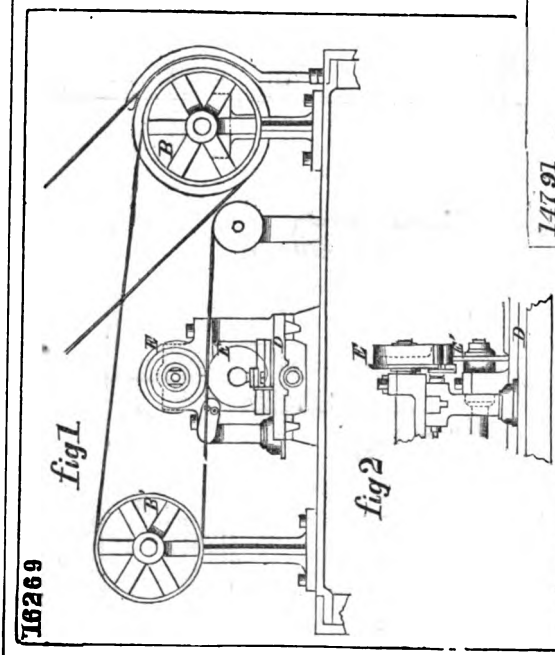

15942

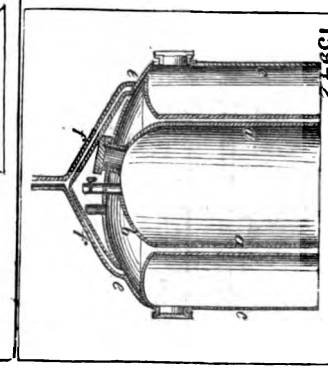

Digitized by Google

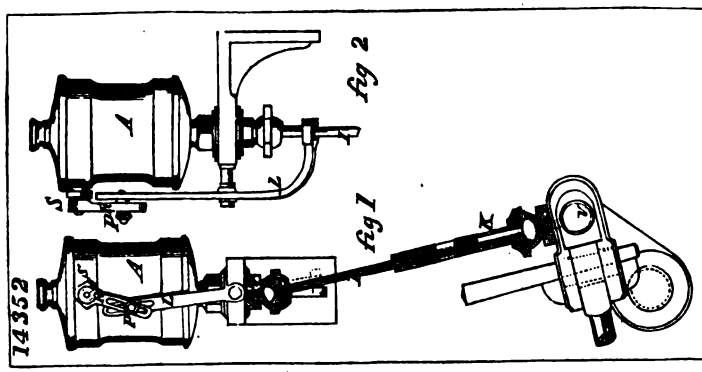

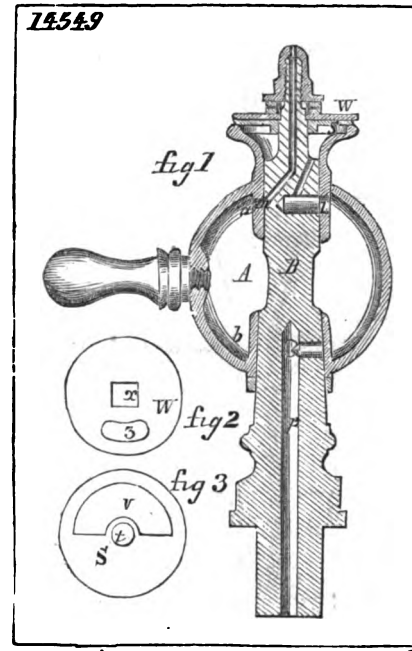

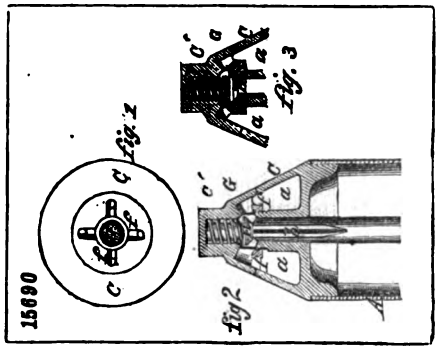

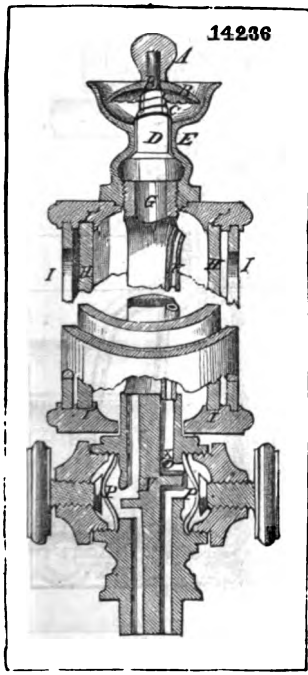

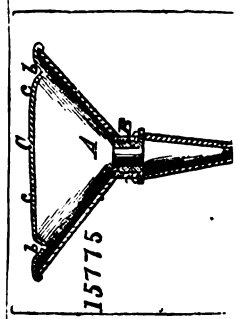

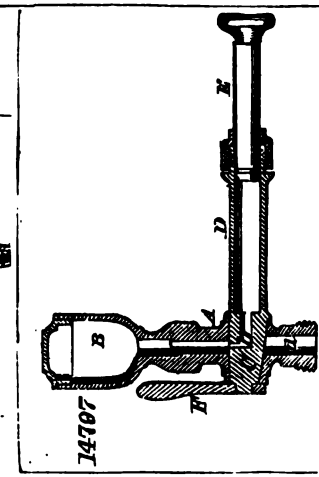

Digitized by Google

16018

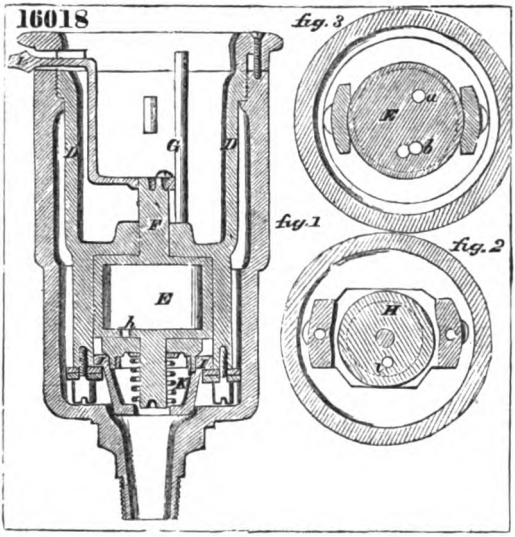

16255

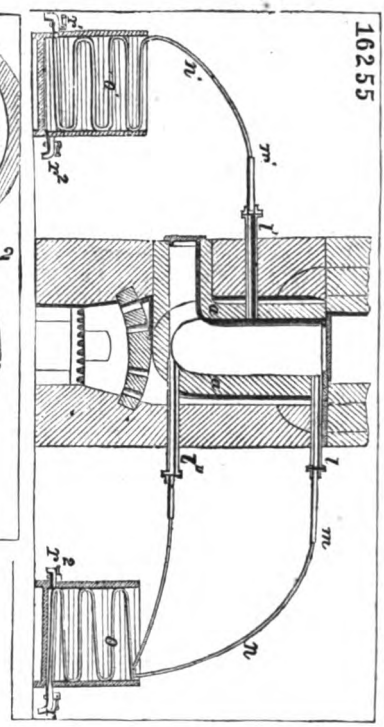

15642.

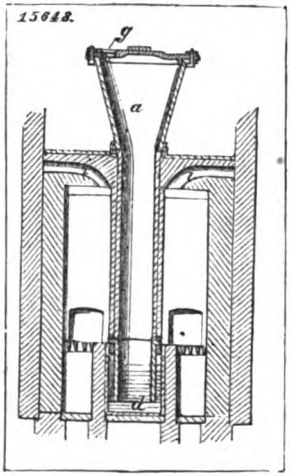

15642

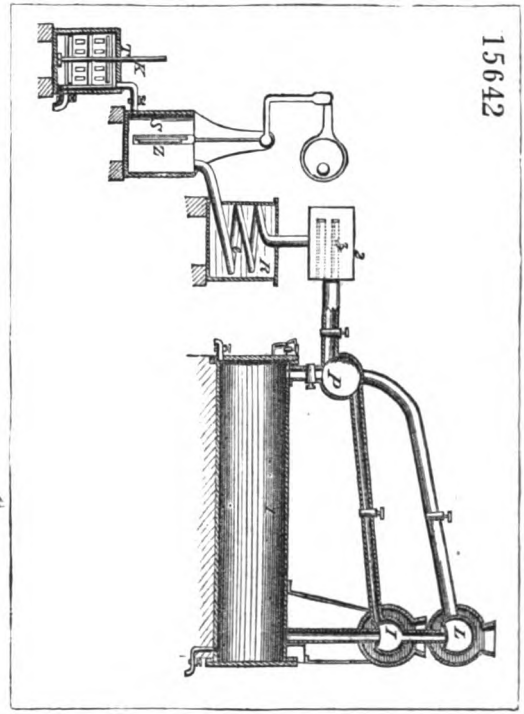

15553

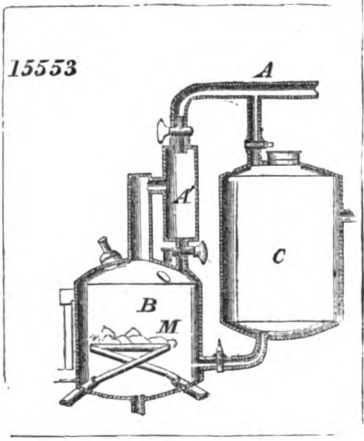

Digitized by Google

14457

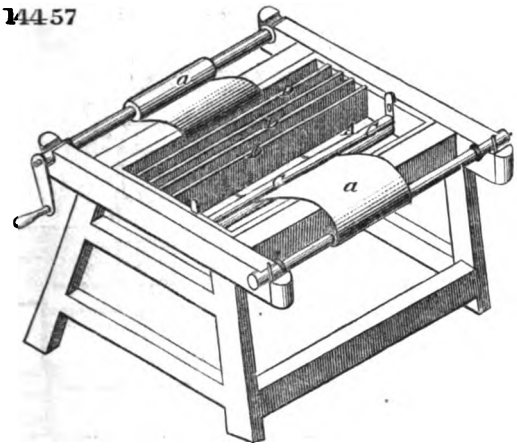

15594

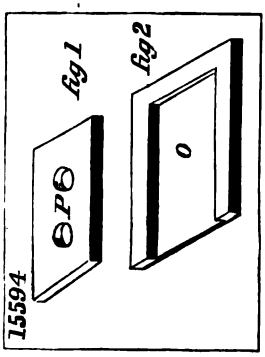

15542

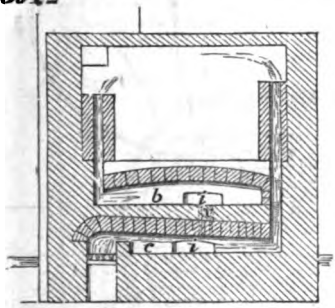

16179

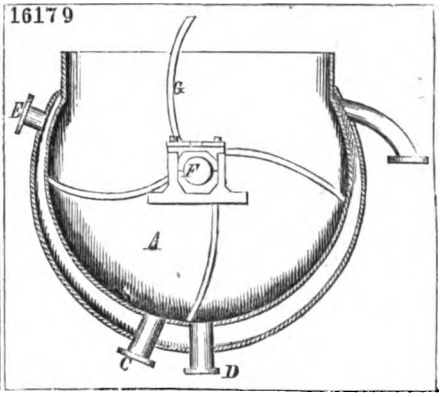

15598.

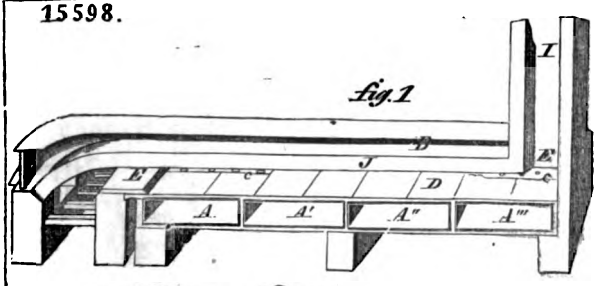

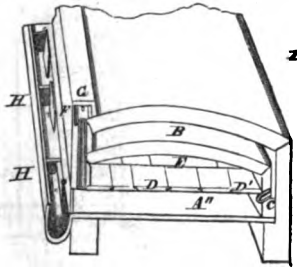

Digitized by Google

16018

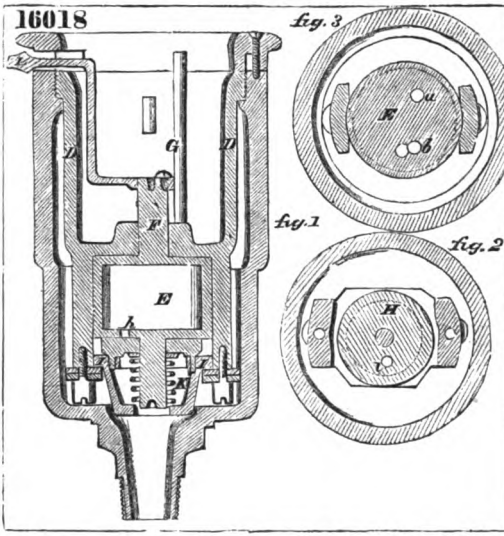

16255

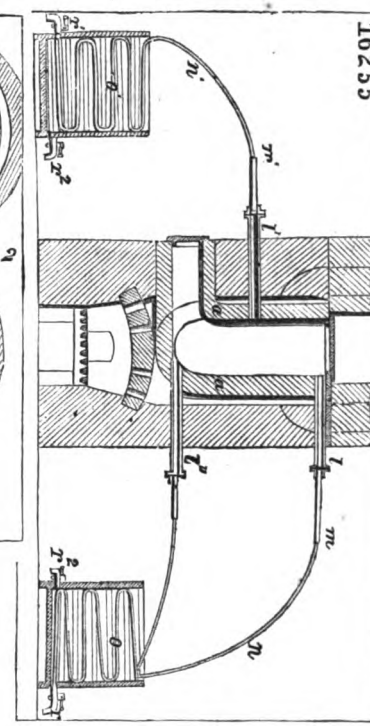

15648.

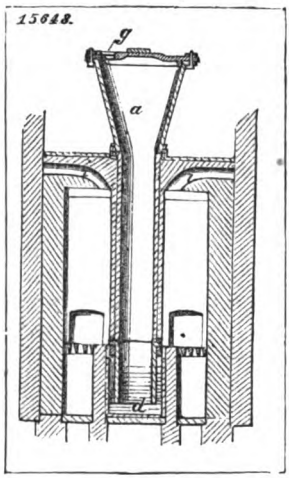

15642

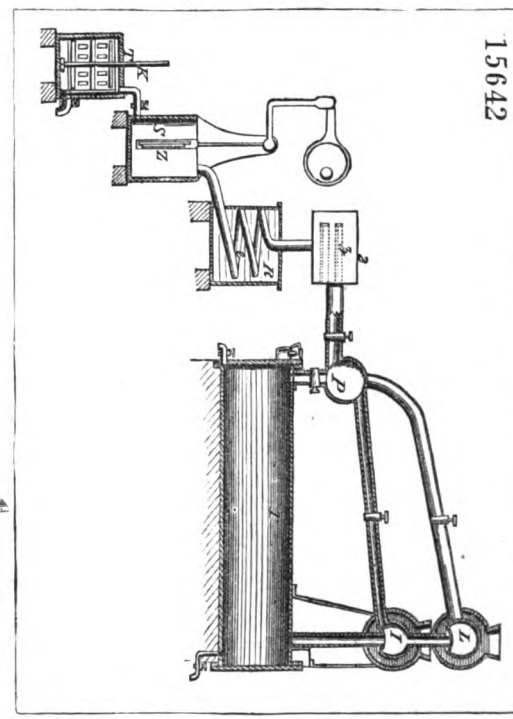

15553

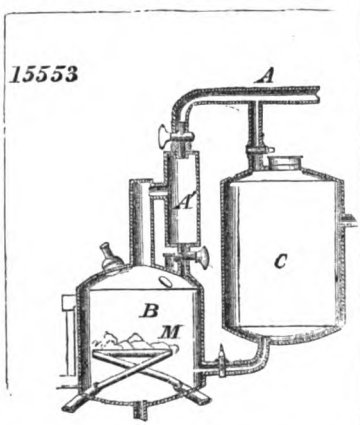

Digitized by Google

14457

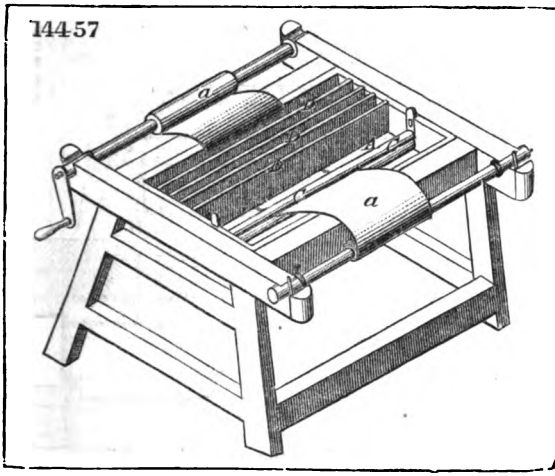

15594

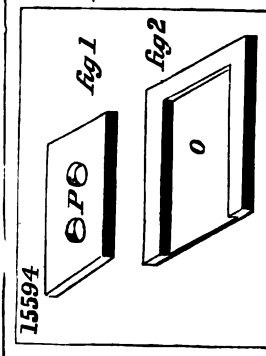

15542

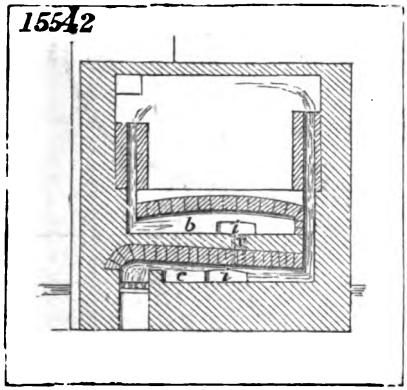

16179

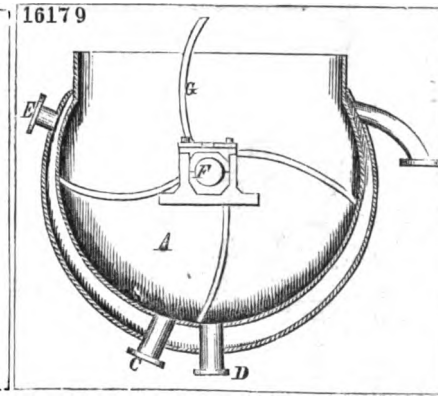

15598.

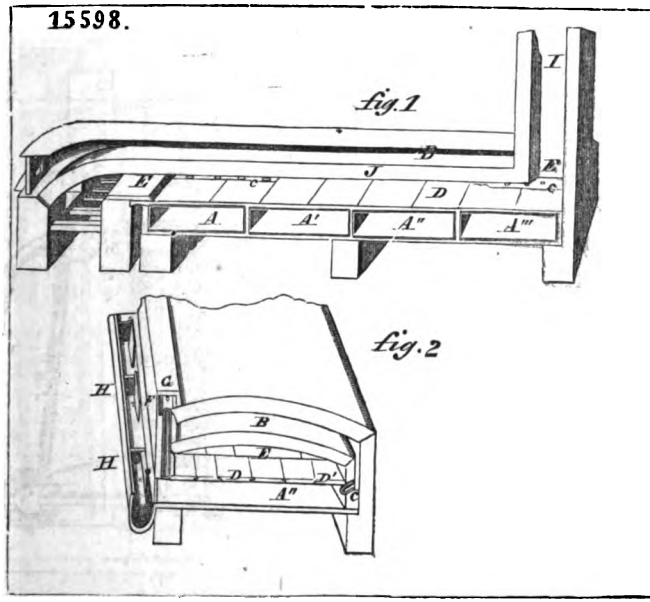

Digitized by Google

14813

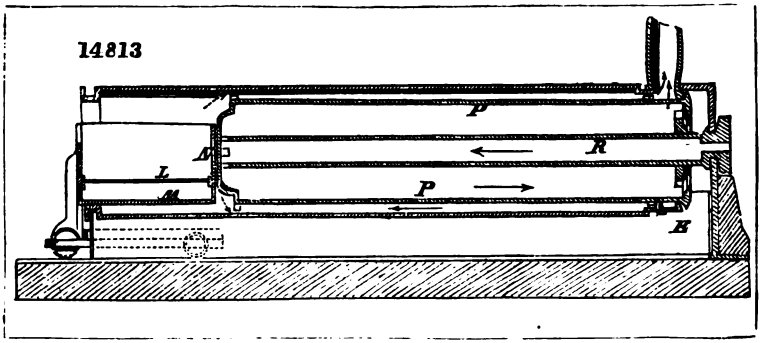

15411

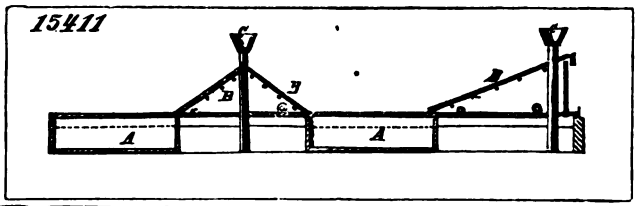

15432

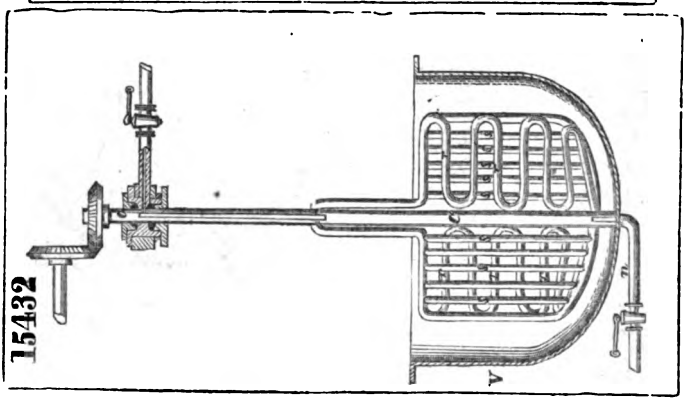

15975

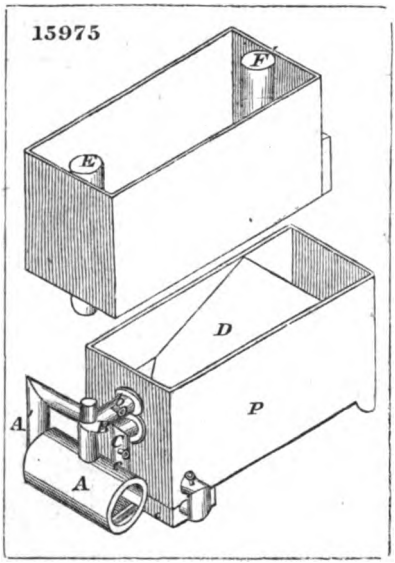

15884

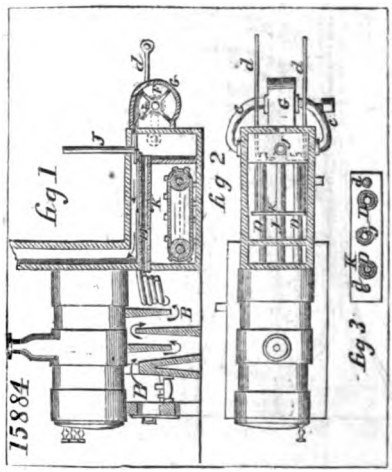

Digitized by Google

14717

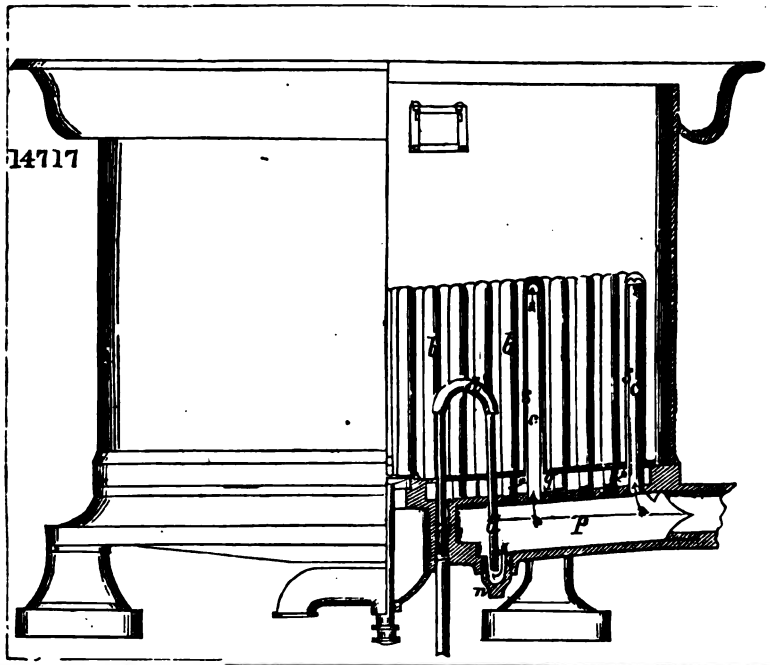

15694

fig 1

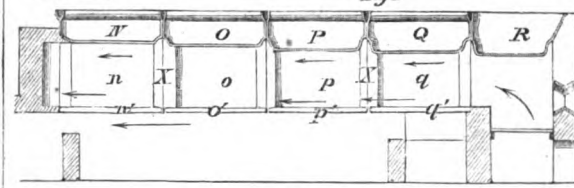

fig 2

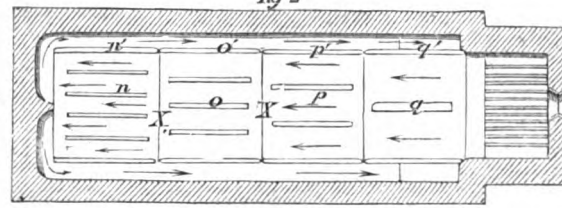

15838.

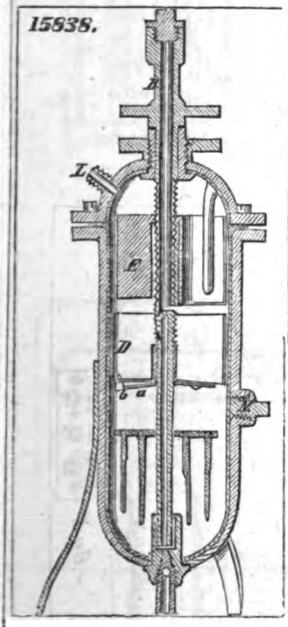

16051

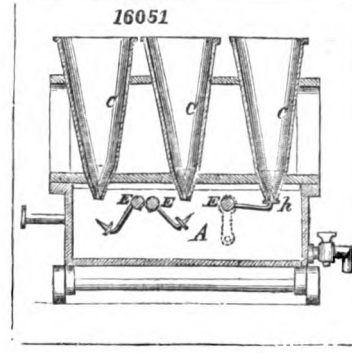

Digitized by Google

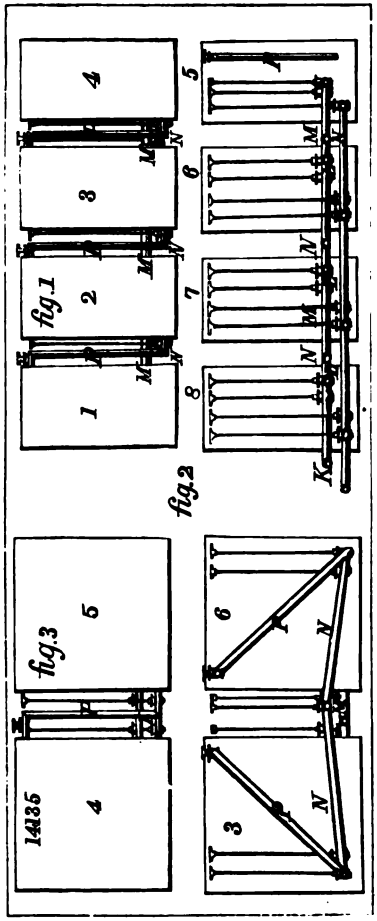

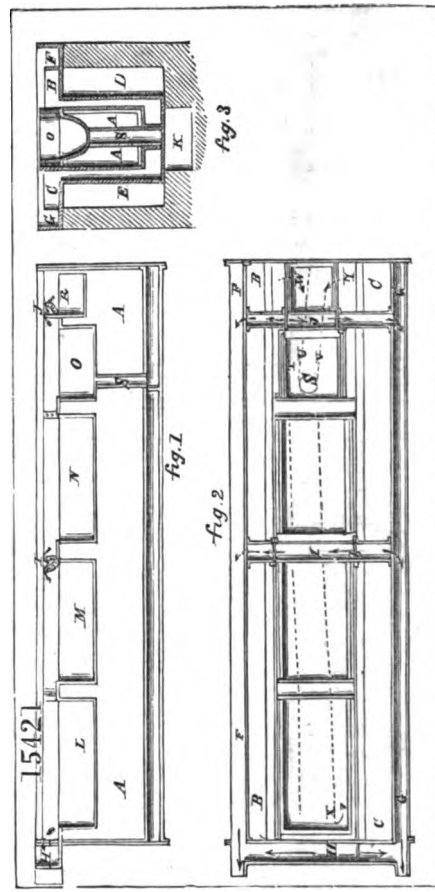

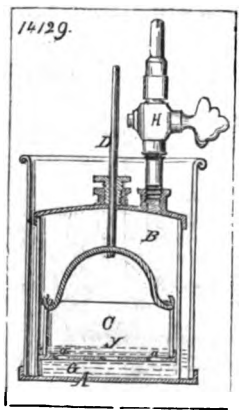

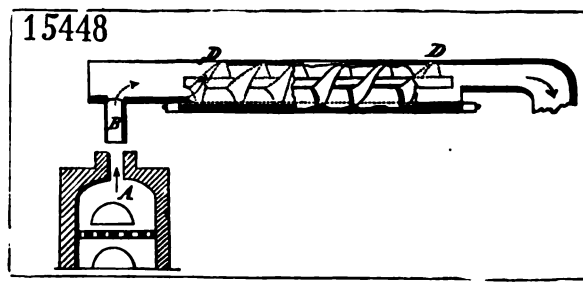

Digitized by Google

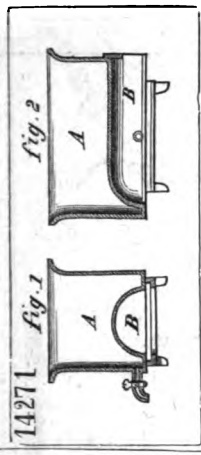

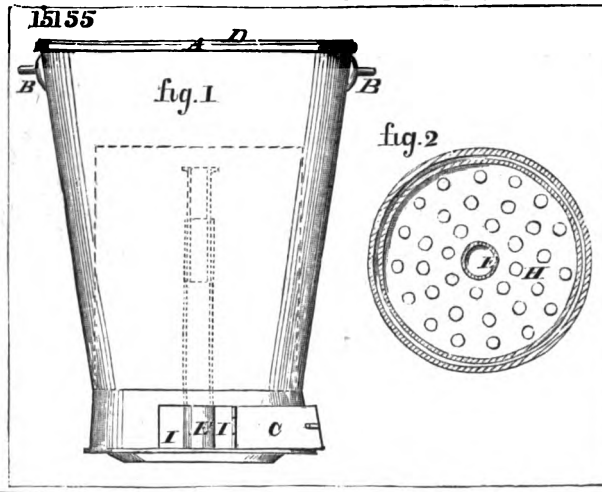

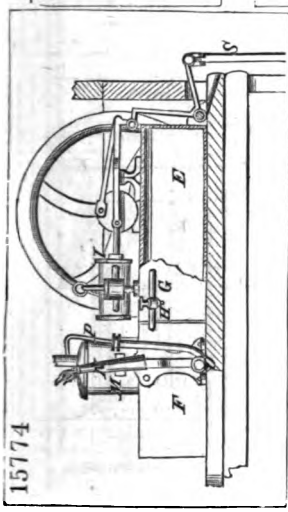

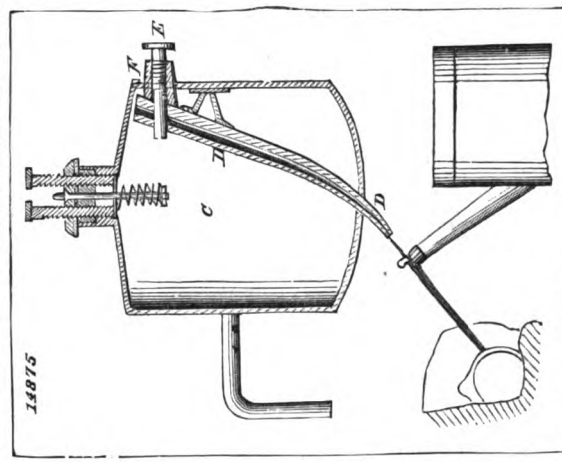

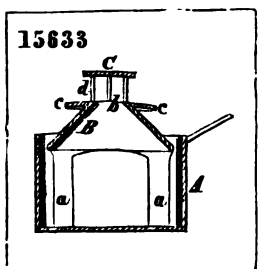

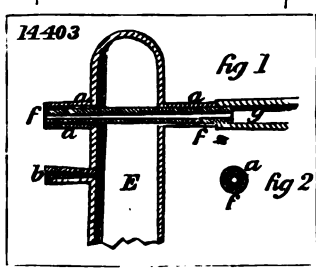

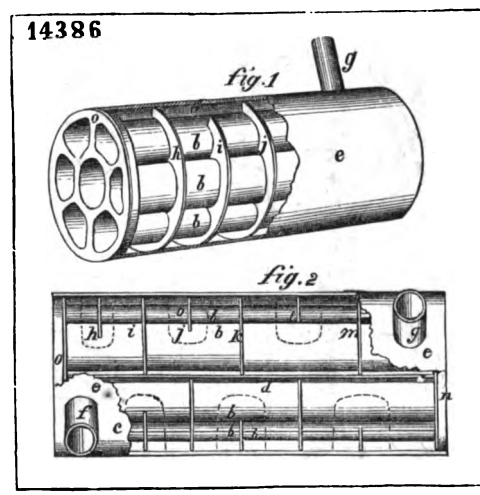

Digitized by Google

14641

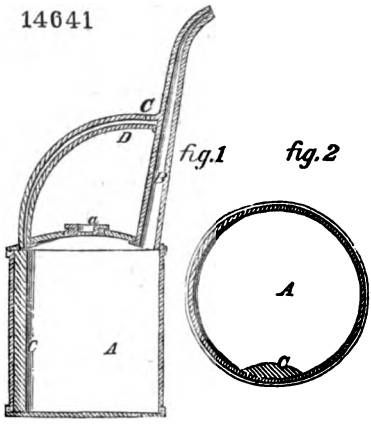

15584

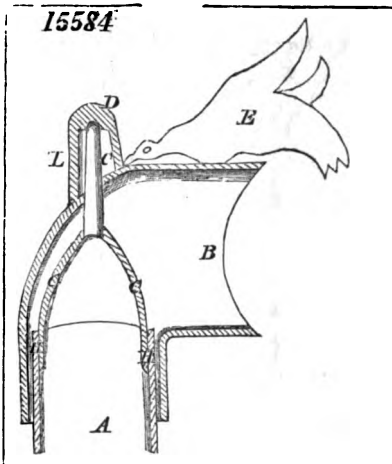

14074

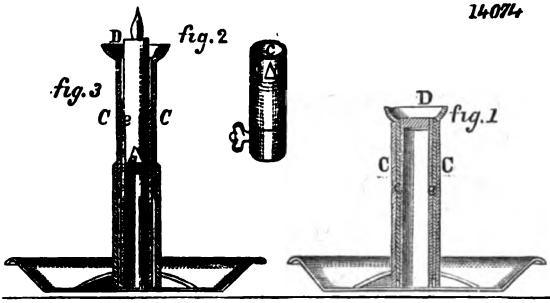

15916

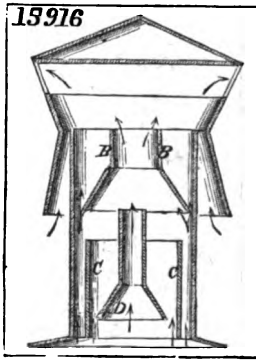

14619

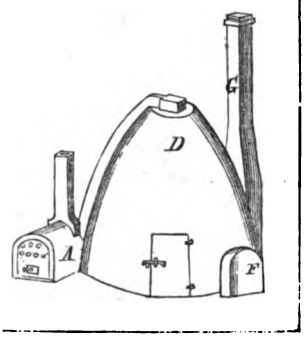

15206

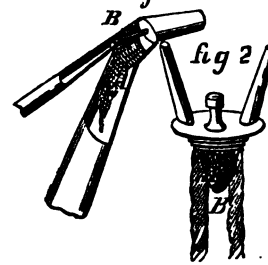

15986

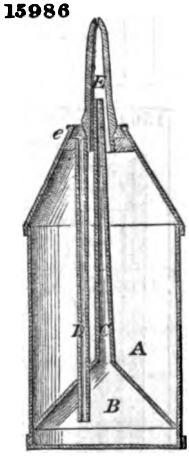

15129.

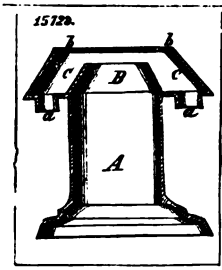

15536

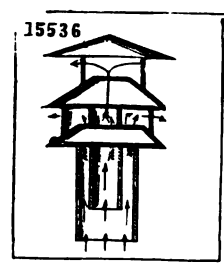

Digitized by Google

16246

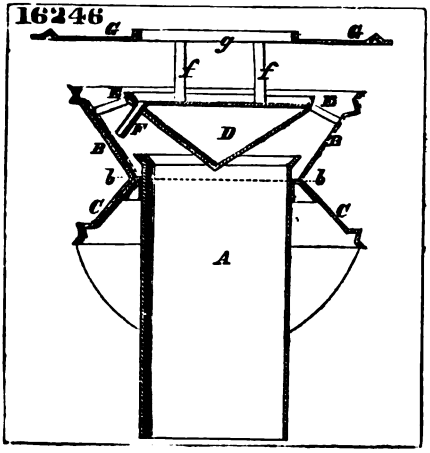

15458

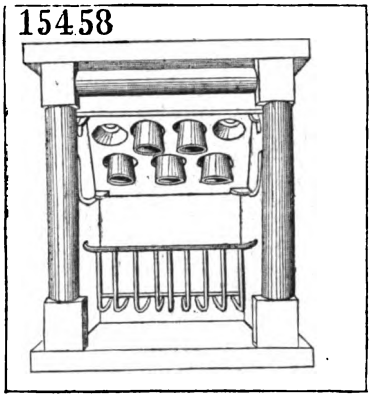

14650

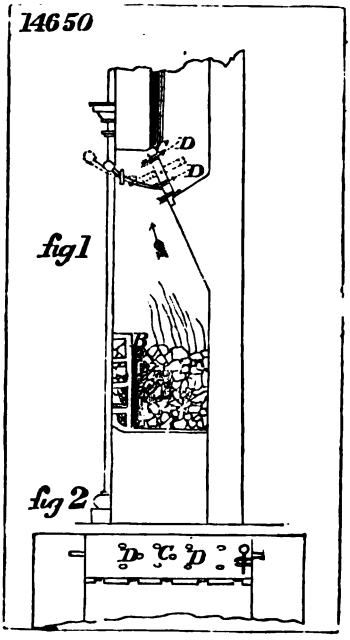

15779

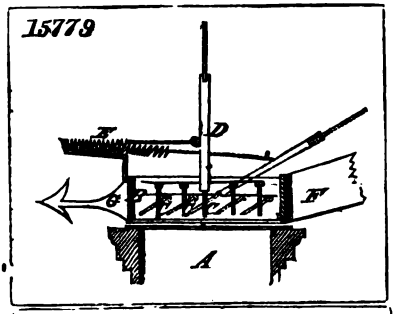

15519

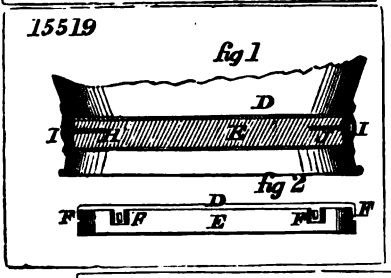

14828

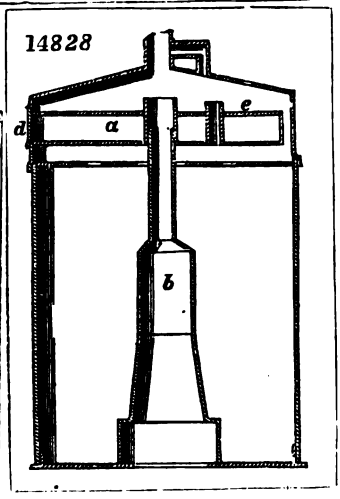

15645

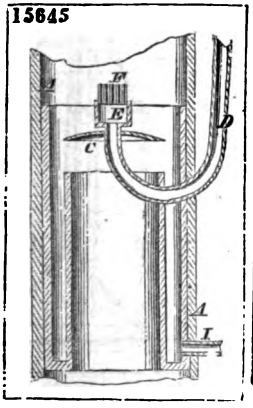

14127

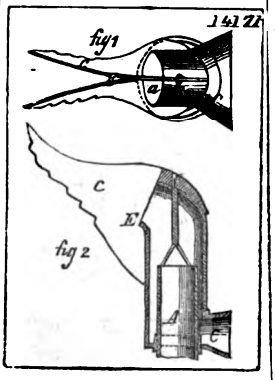

Digitized by Google

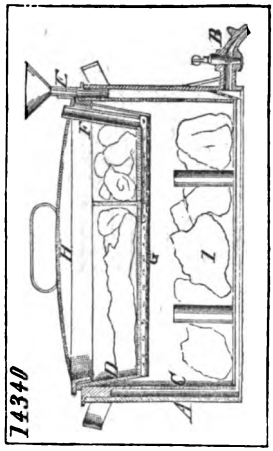

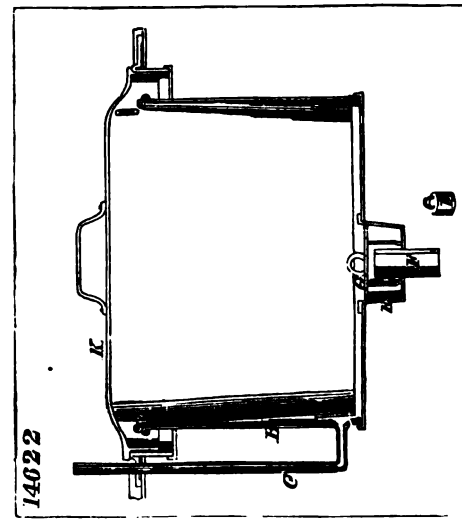

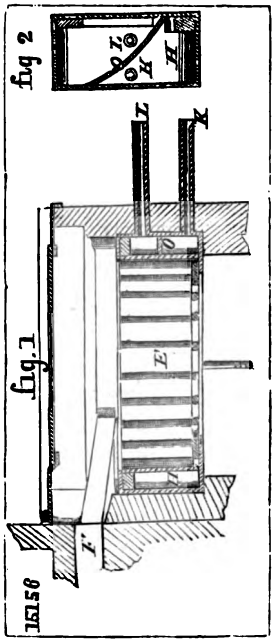

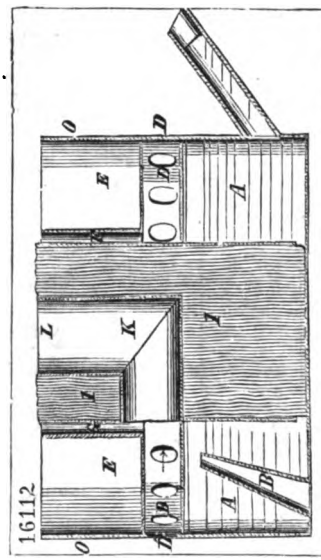

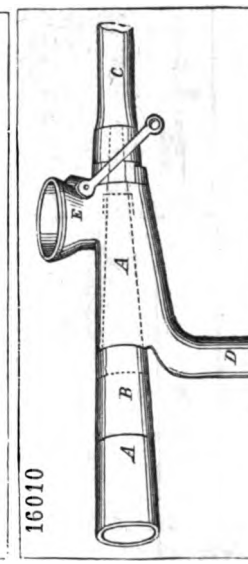

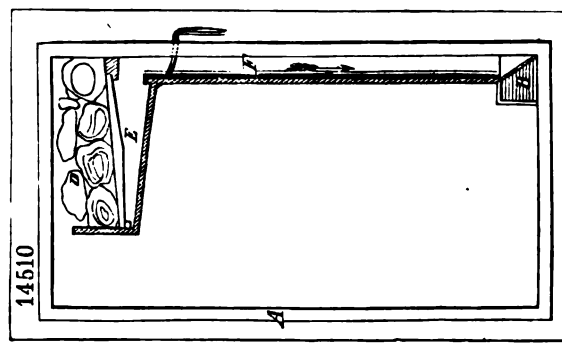

Digitized by Google

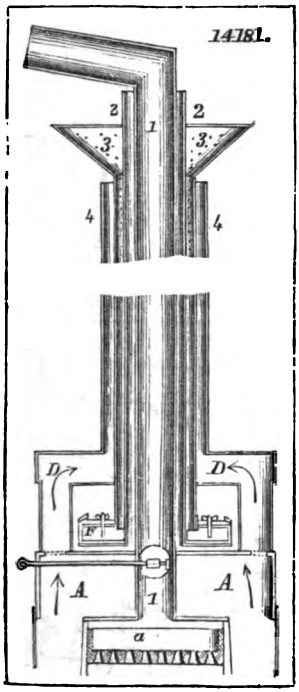

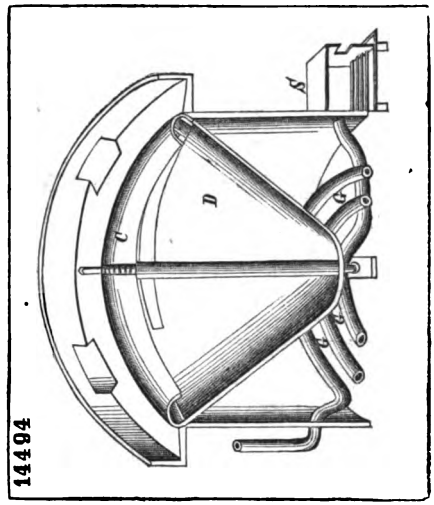

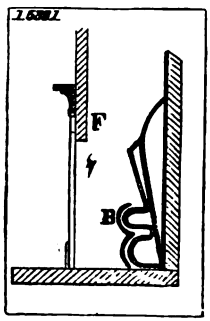

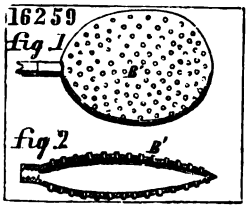

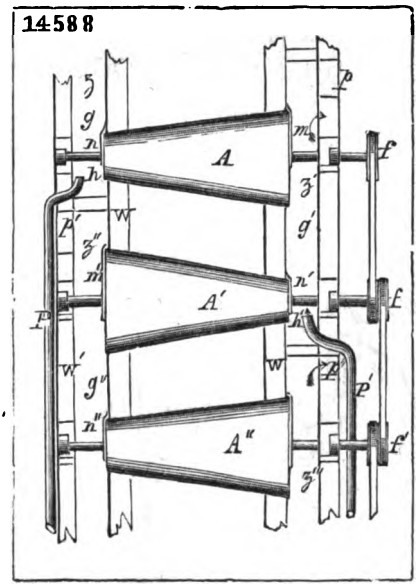

Digitized by Google

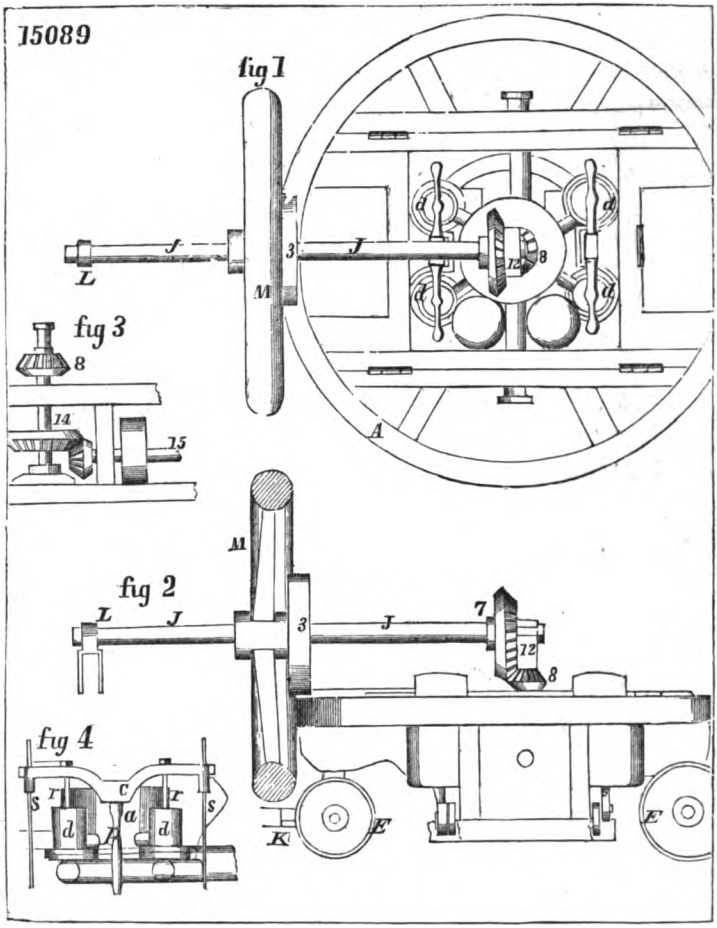

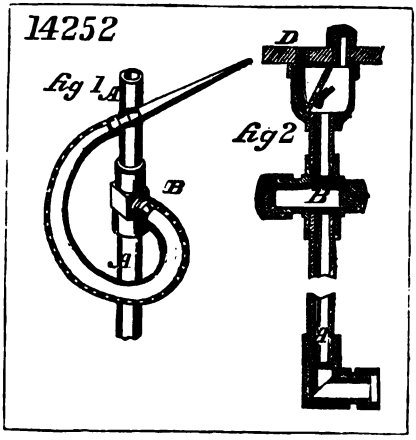

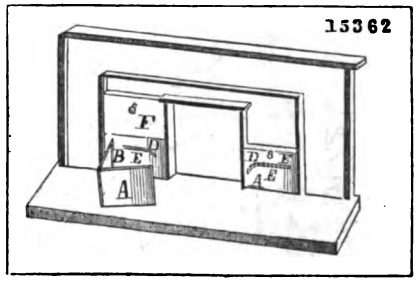

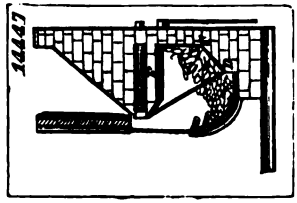

Digitized by Google

14008

fig. 2.

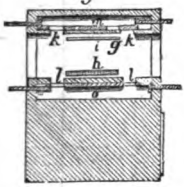

fig. 1.

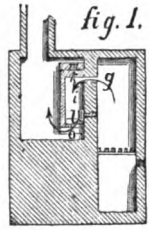

14908

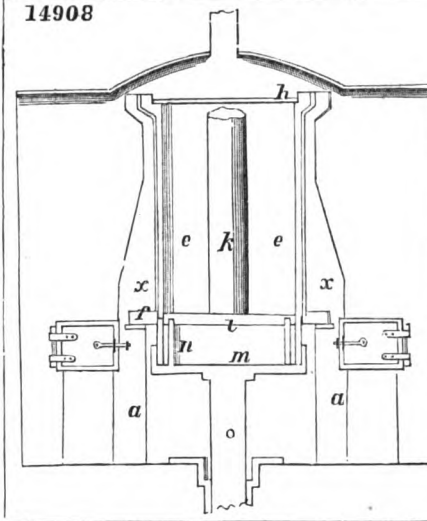

16287

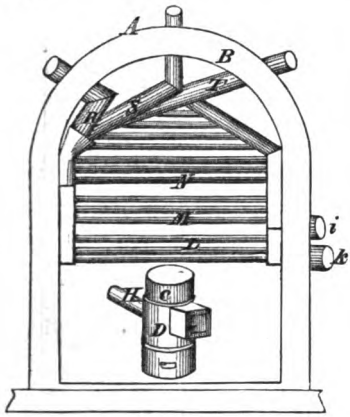

15271

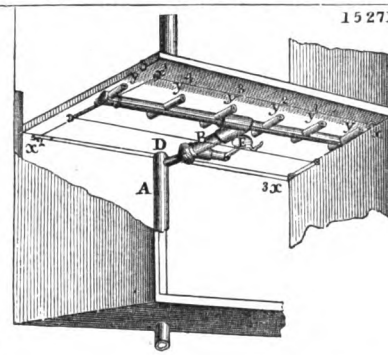

14153

fig. 2.

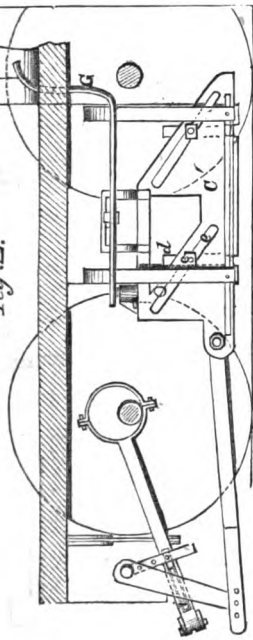

fig. 4.

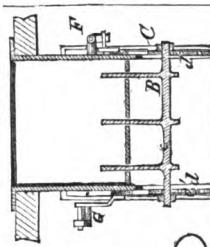

fig. 3.

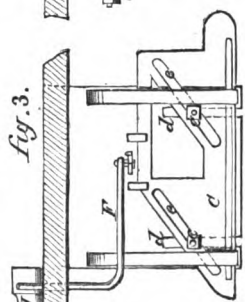

fig. 1.

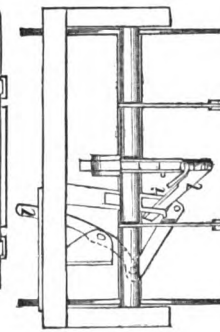

Digitized by Google

15481

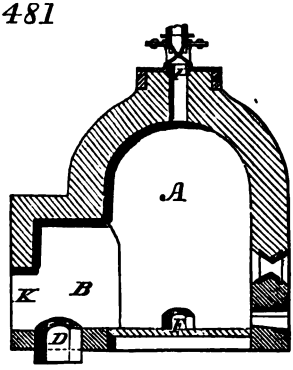

15613

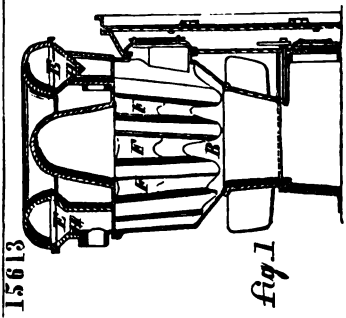

14812

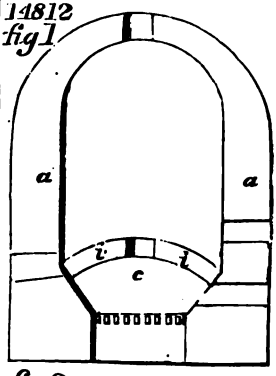

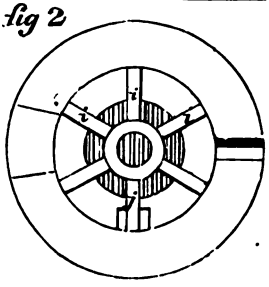

15832

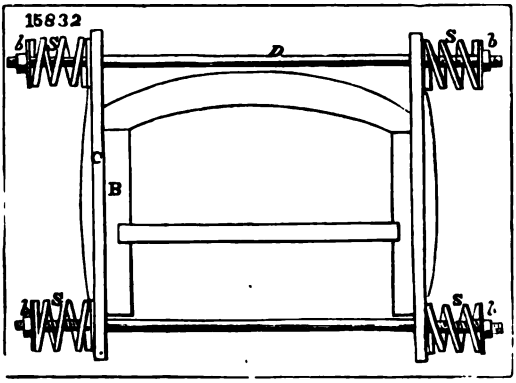

14298

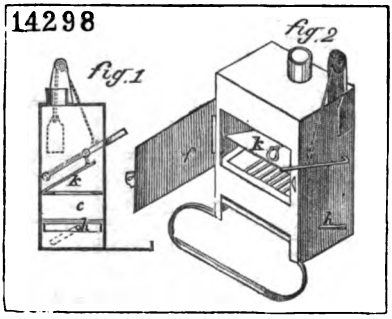

14892

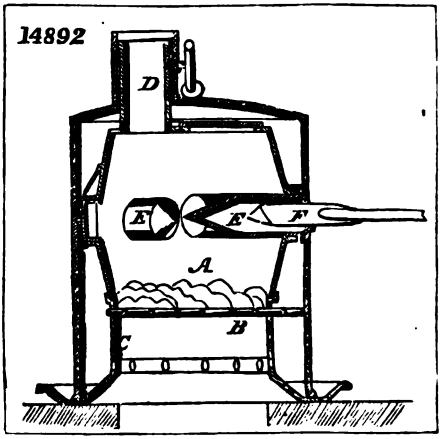

Digitized by Google

15009

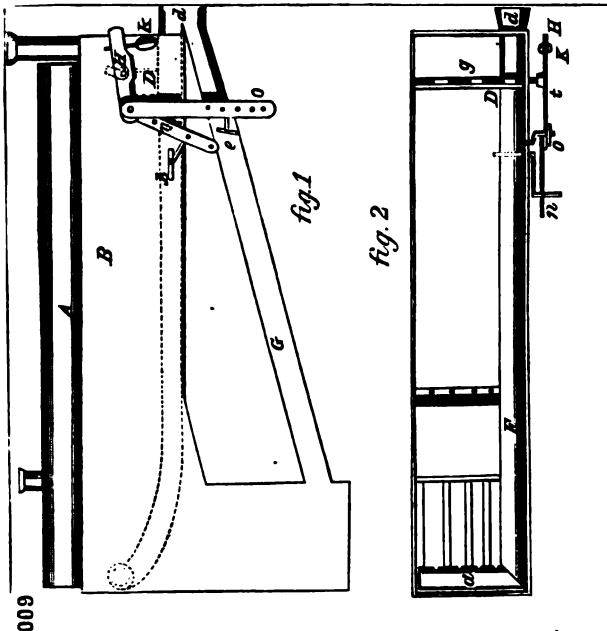

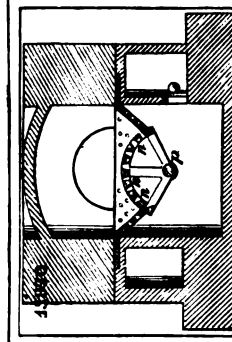

14196

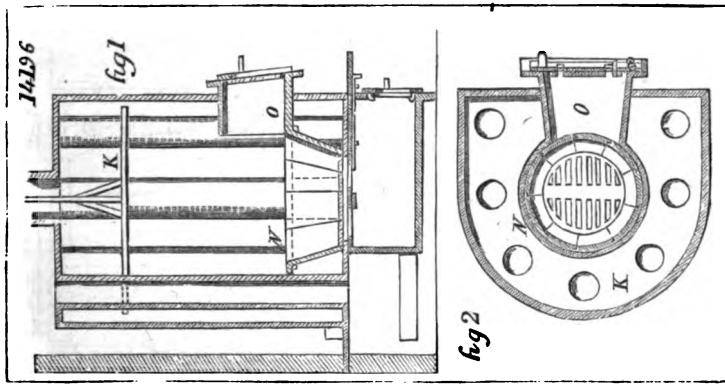

15389

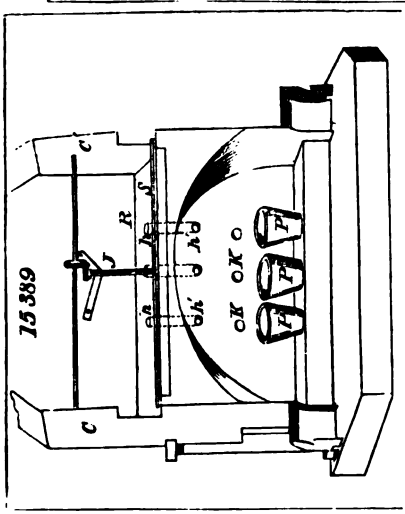

15018

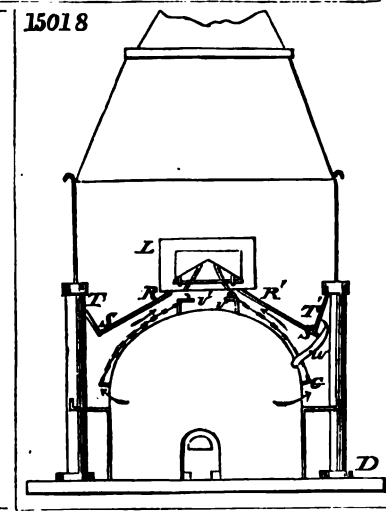

16317

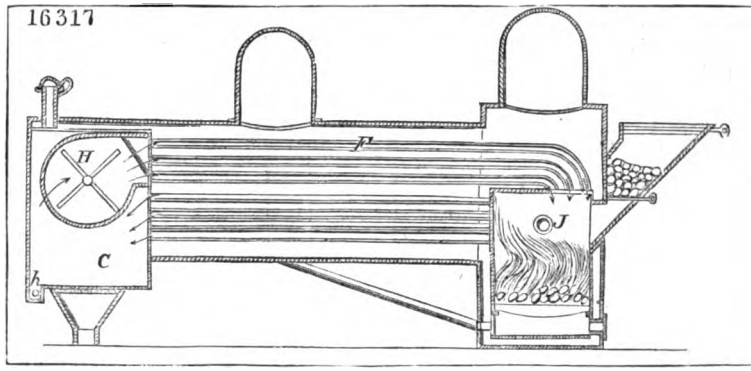

16055

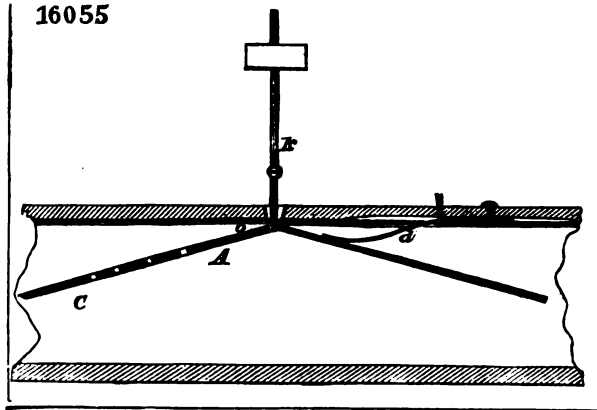

14674

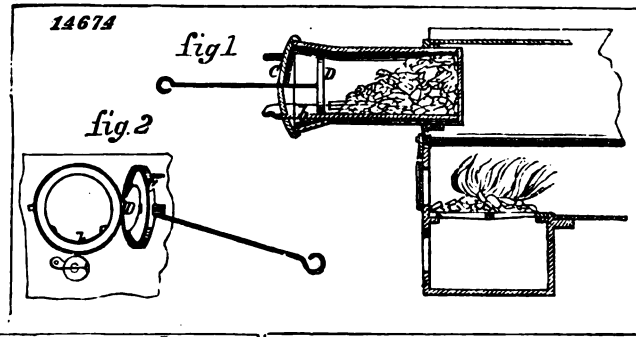

14601

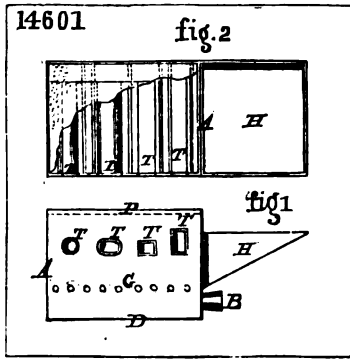

15791

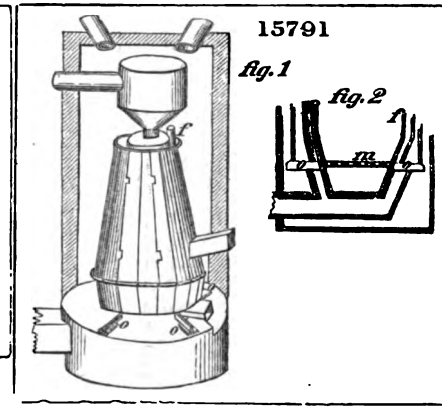

Digitized by Google

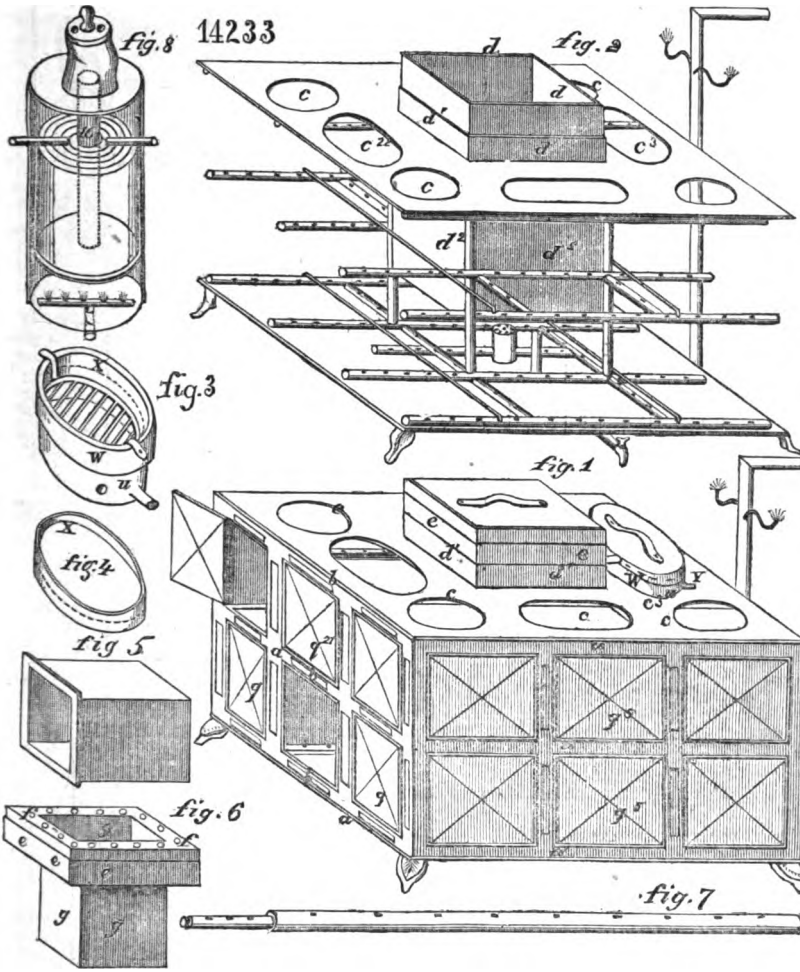

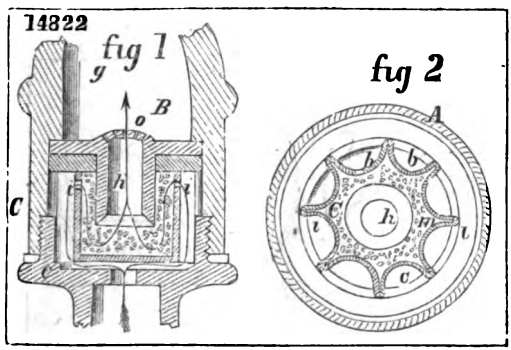

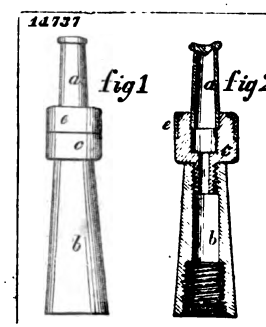

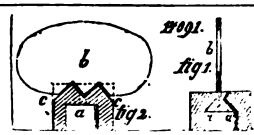

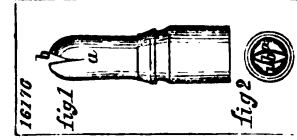

Digitized by Google

14325

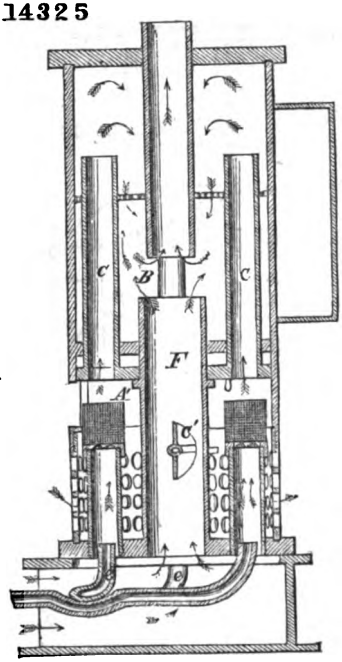

15219

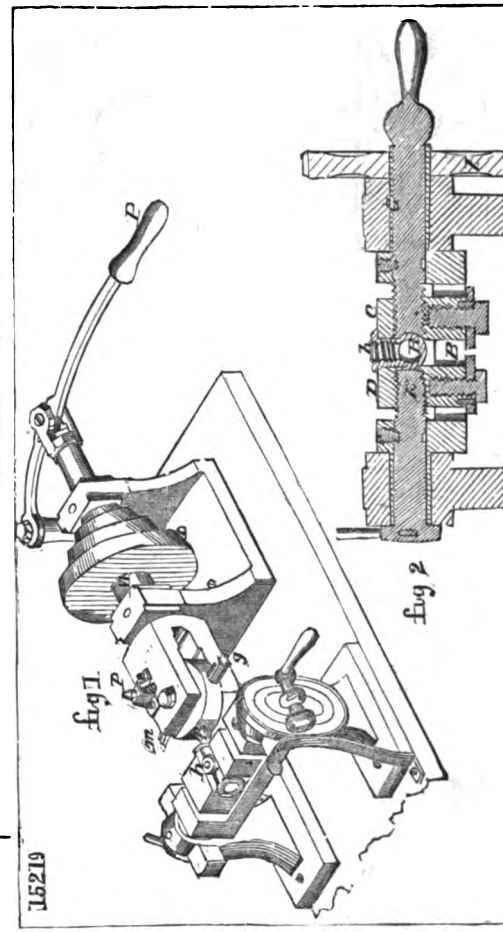

15614

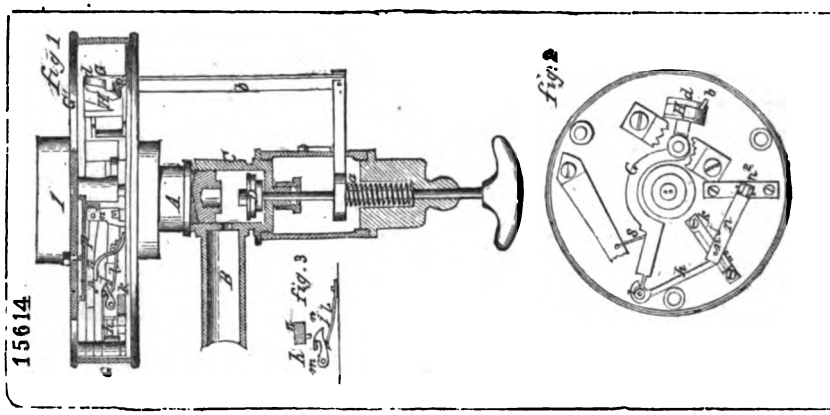

16073

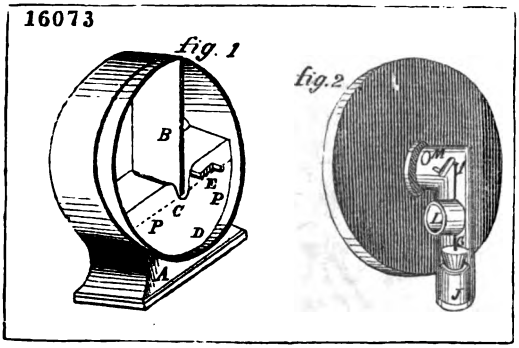

14414

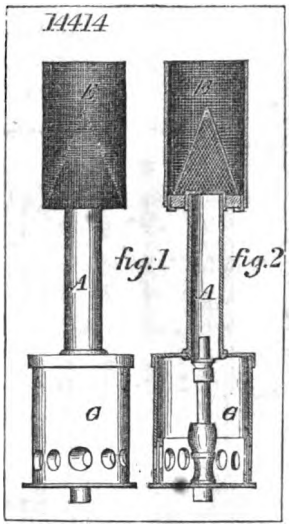

16031

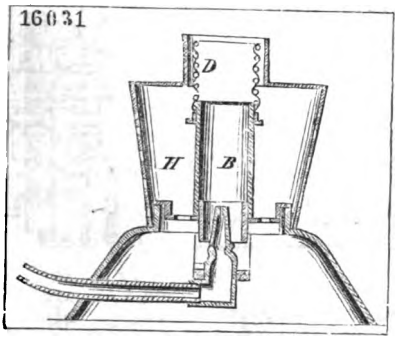

14770

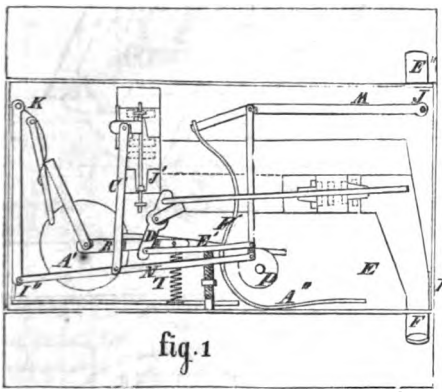

fig. 1

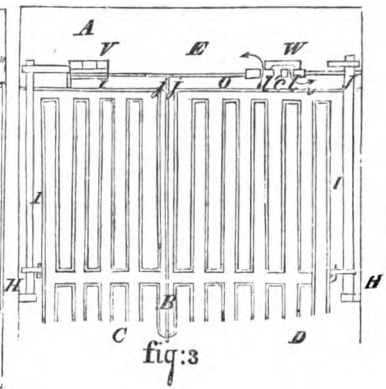

fig. 3

fig. 2

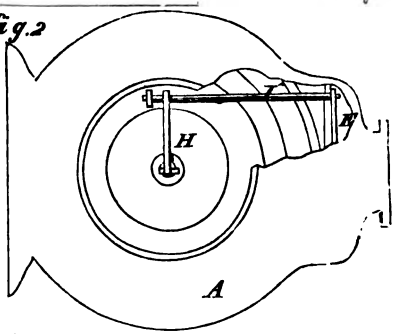

Digitized by Google

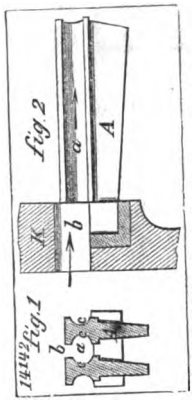

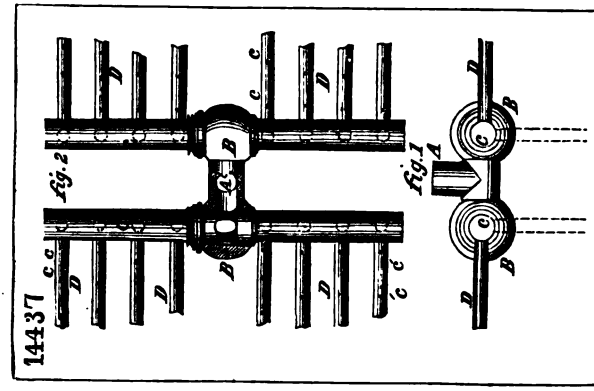

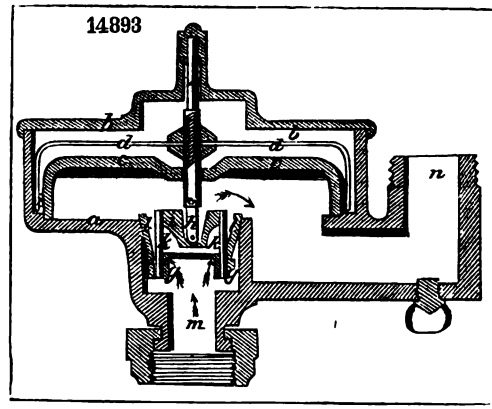

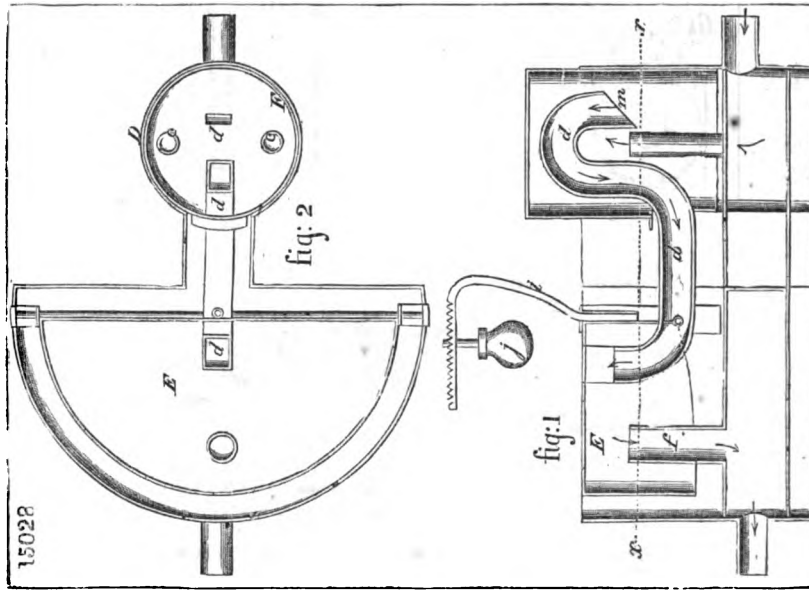

Digitized by Google

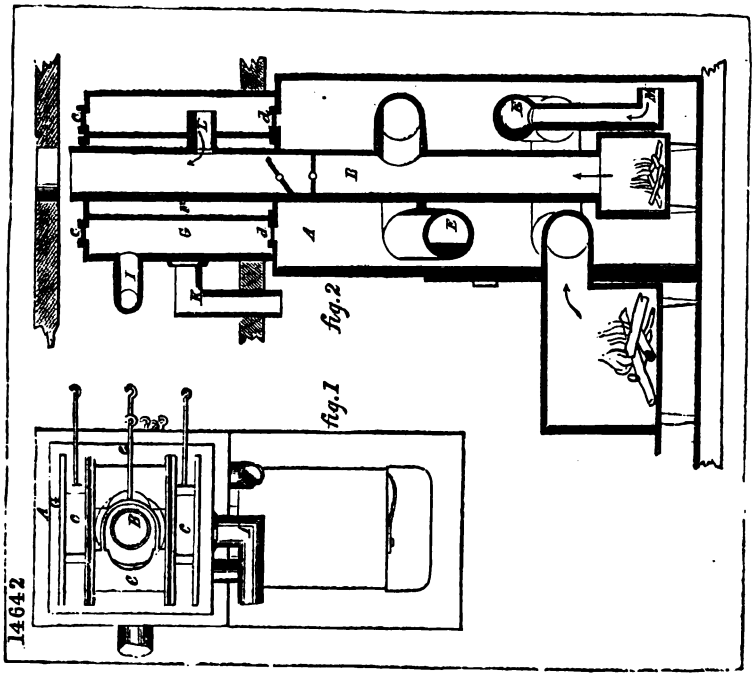

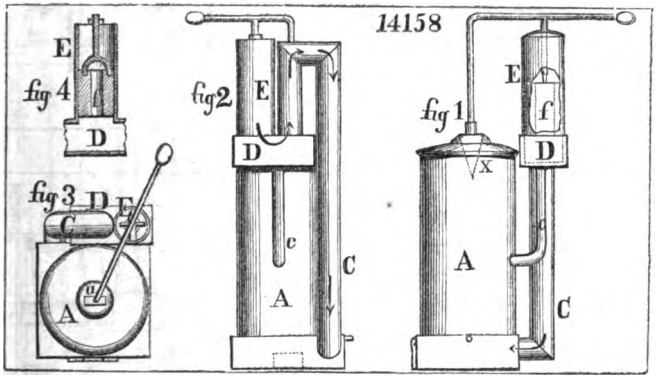

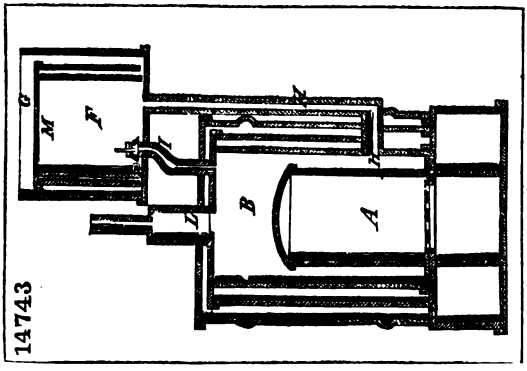

Digitized by Google

14392

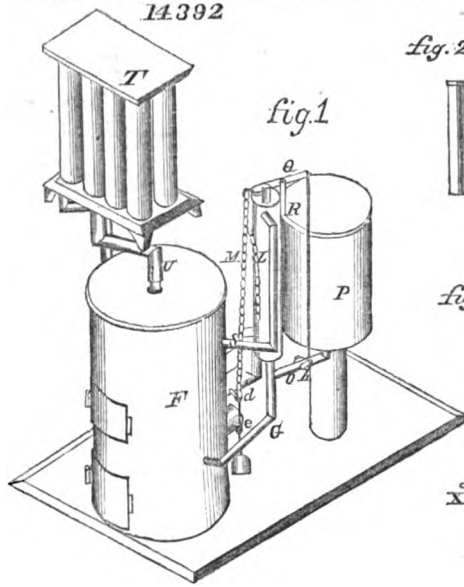

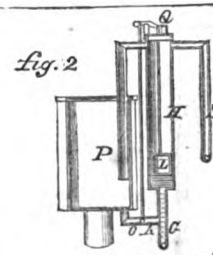

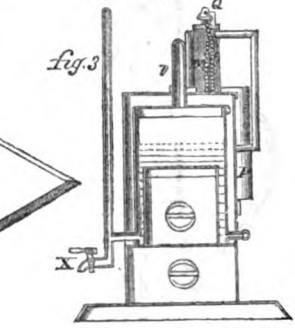

14348

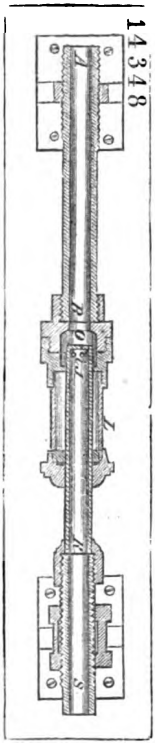

14885

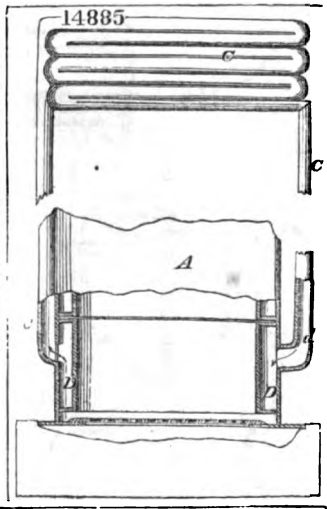

14360

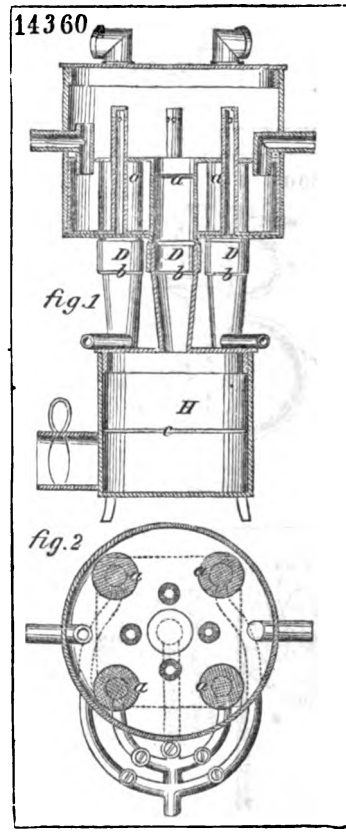

14317

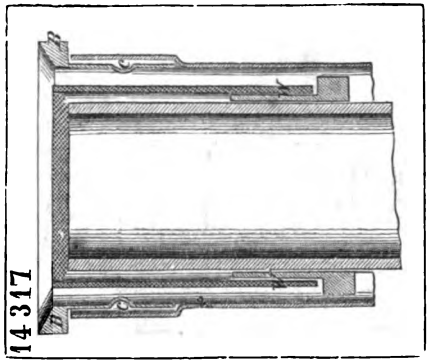

Digitized by Google

14478

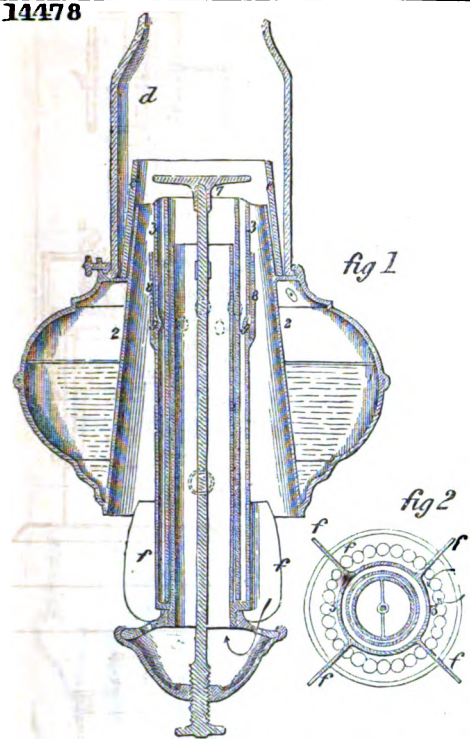

14369

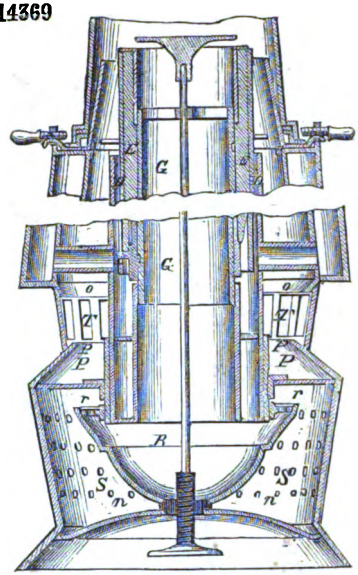

15724

15636

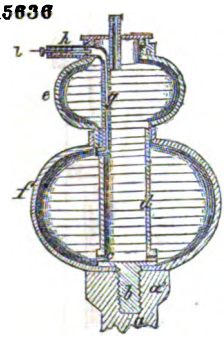

14248

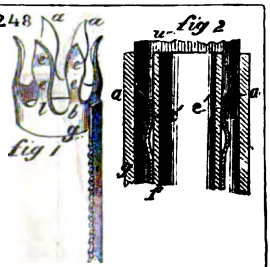

14492

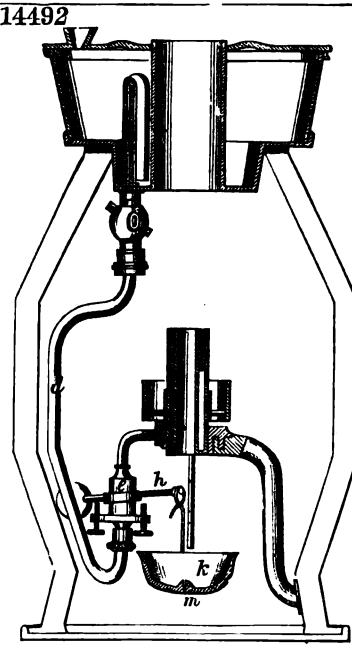

Digitized by Google

15198 fig 1

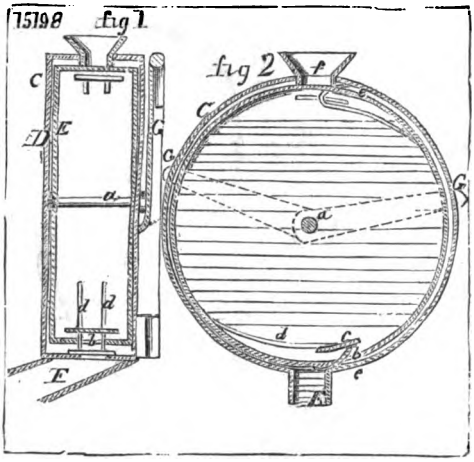

14806

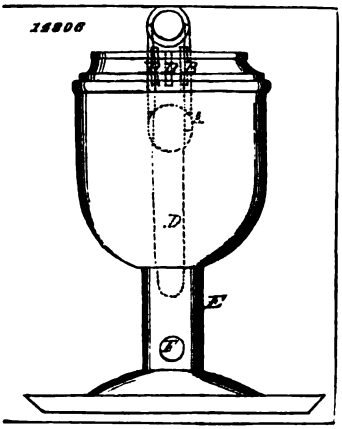

15829

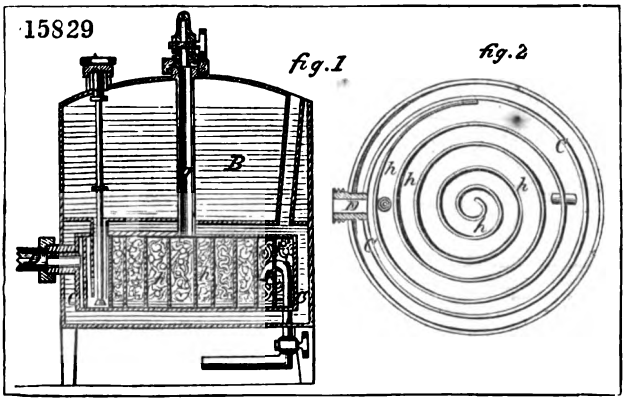

15364

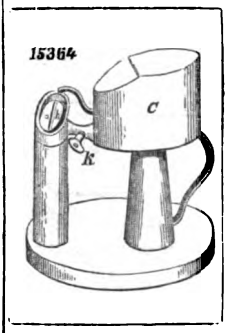

14994

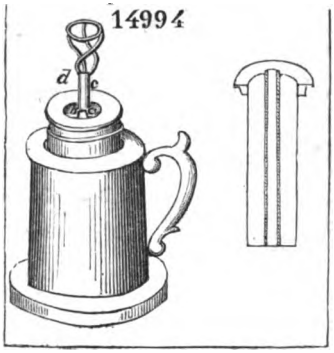

14727

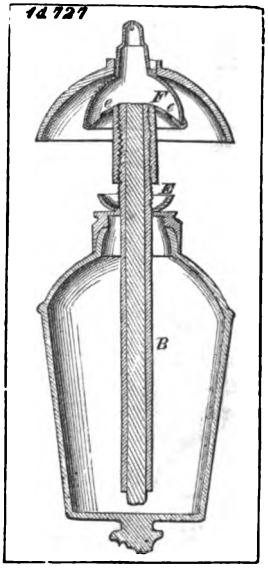

15686

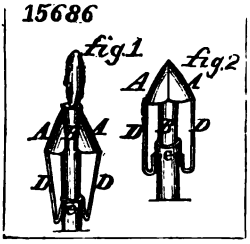

Digitized by Google

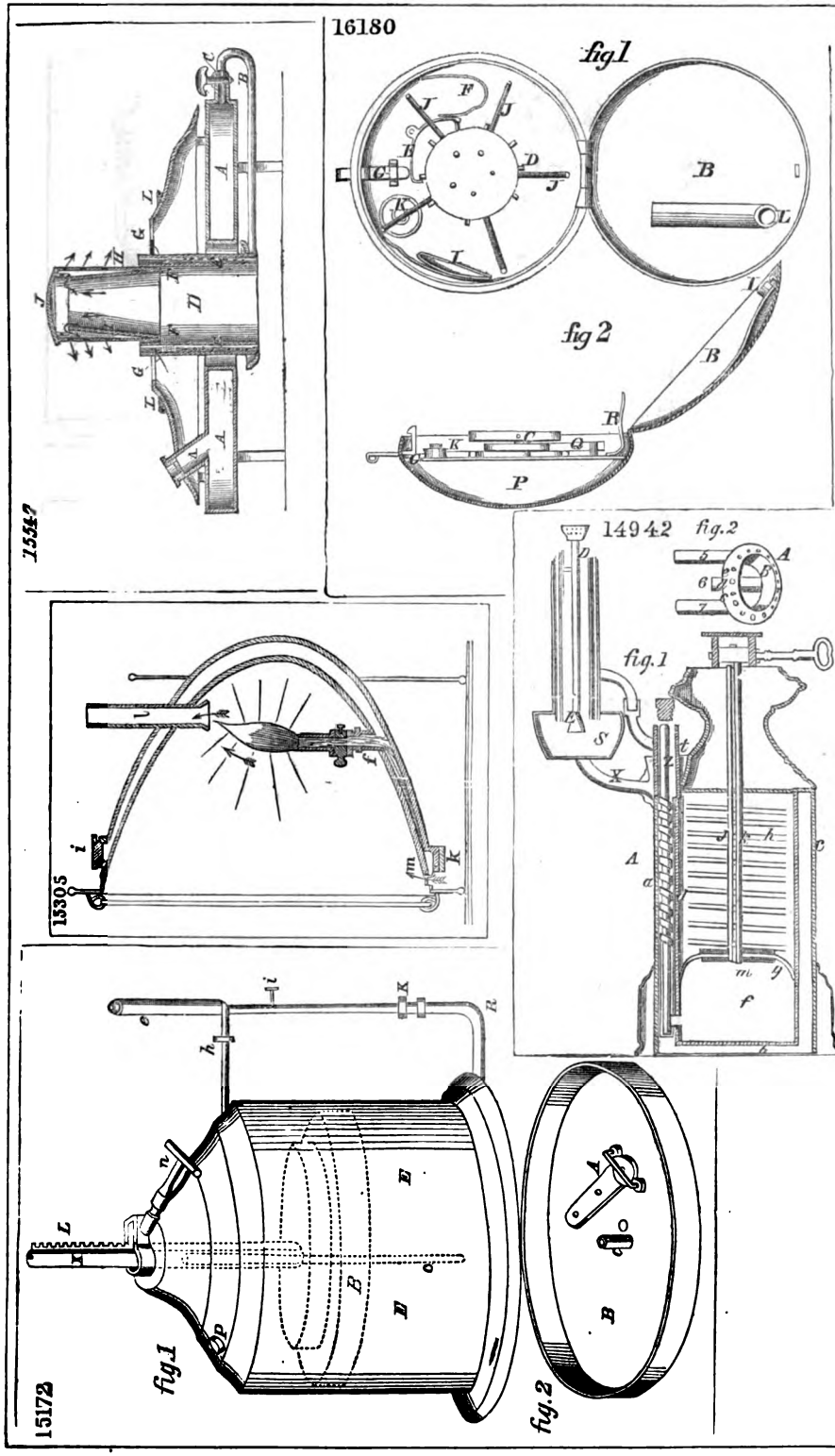

Digitized by Google

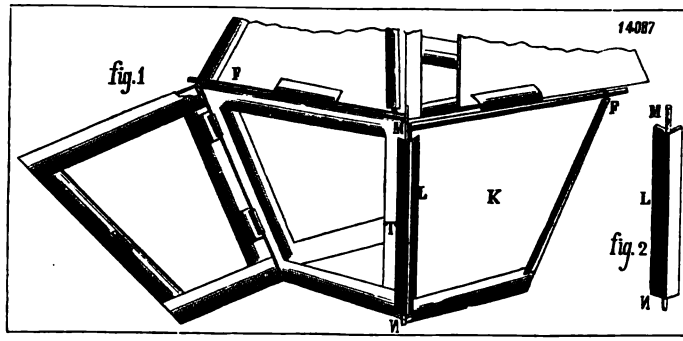

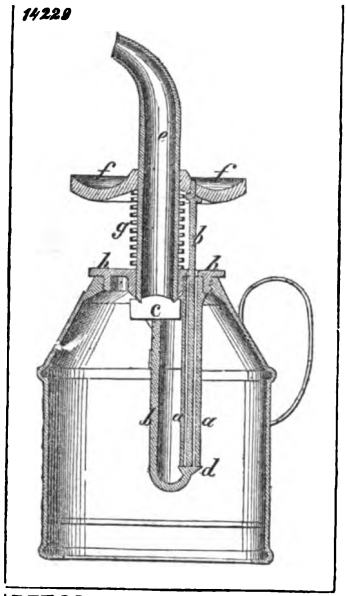

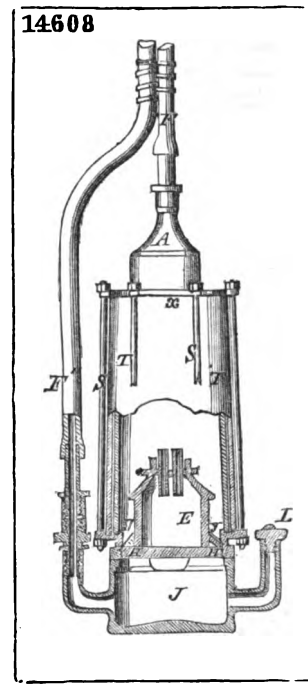

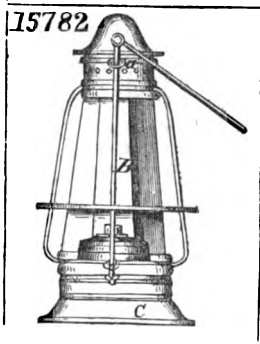

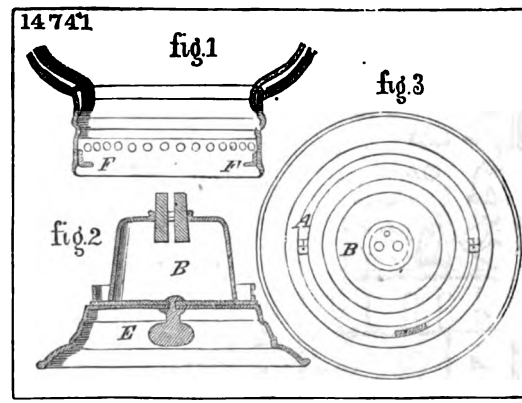

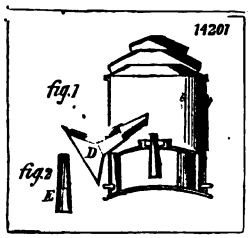

Digitized by Google

14825

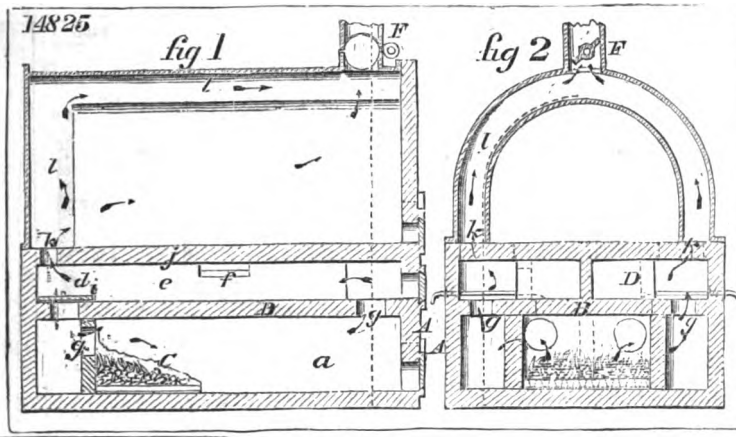

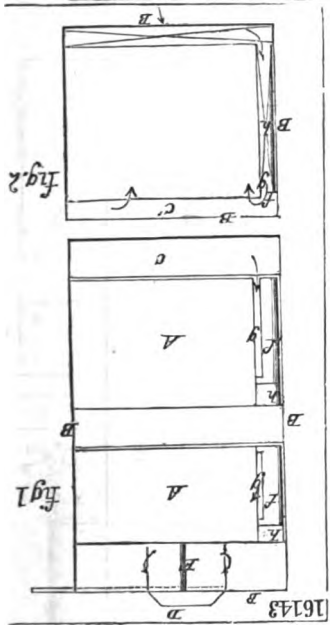

16143

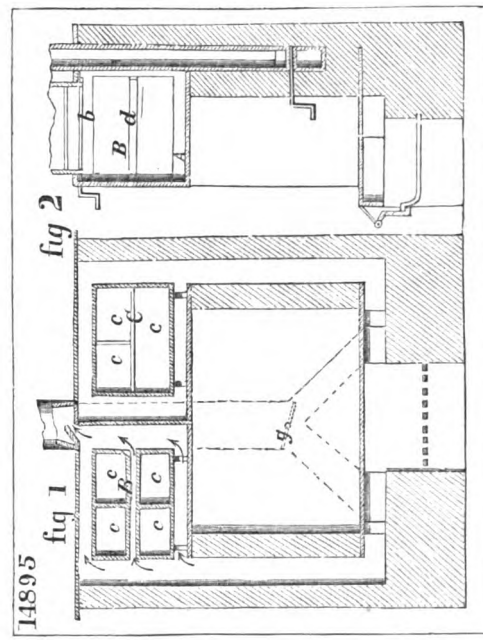

14895

15753

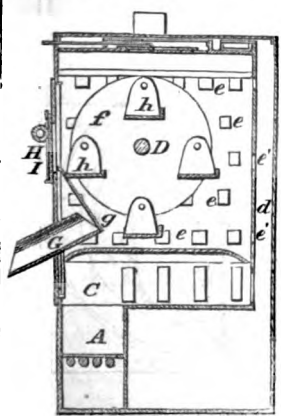

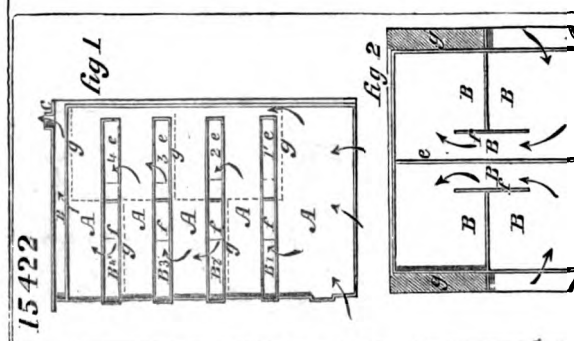

15422

Digitized by Google

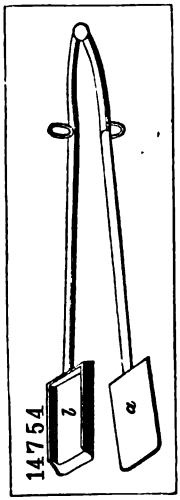

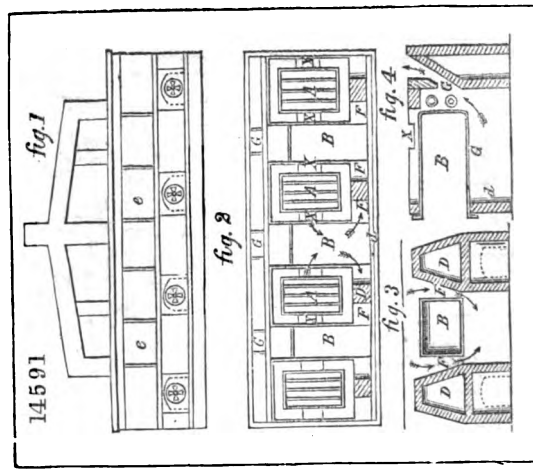

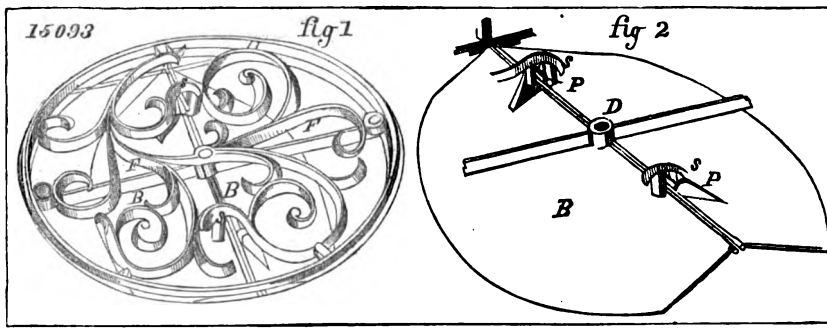

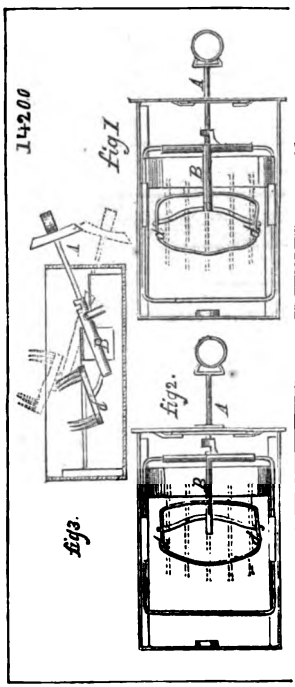

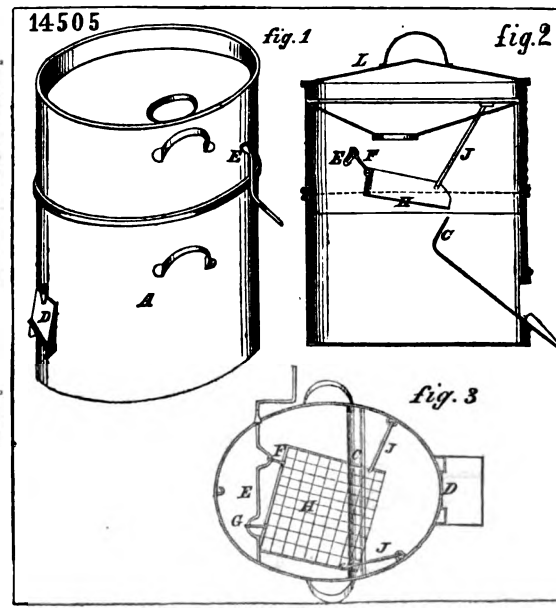

Digitized by Google

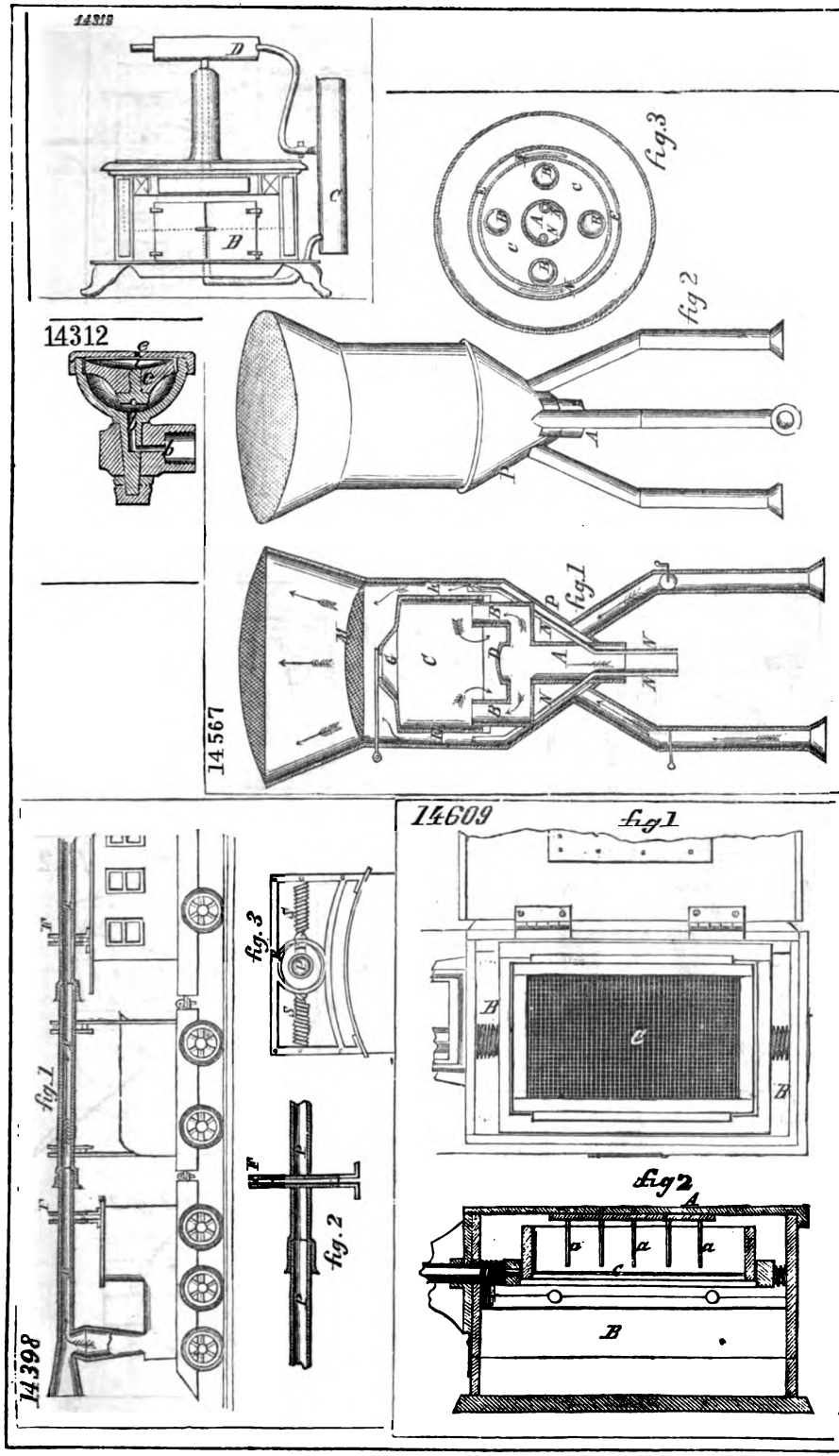

Digitized by Google

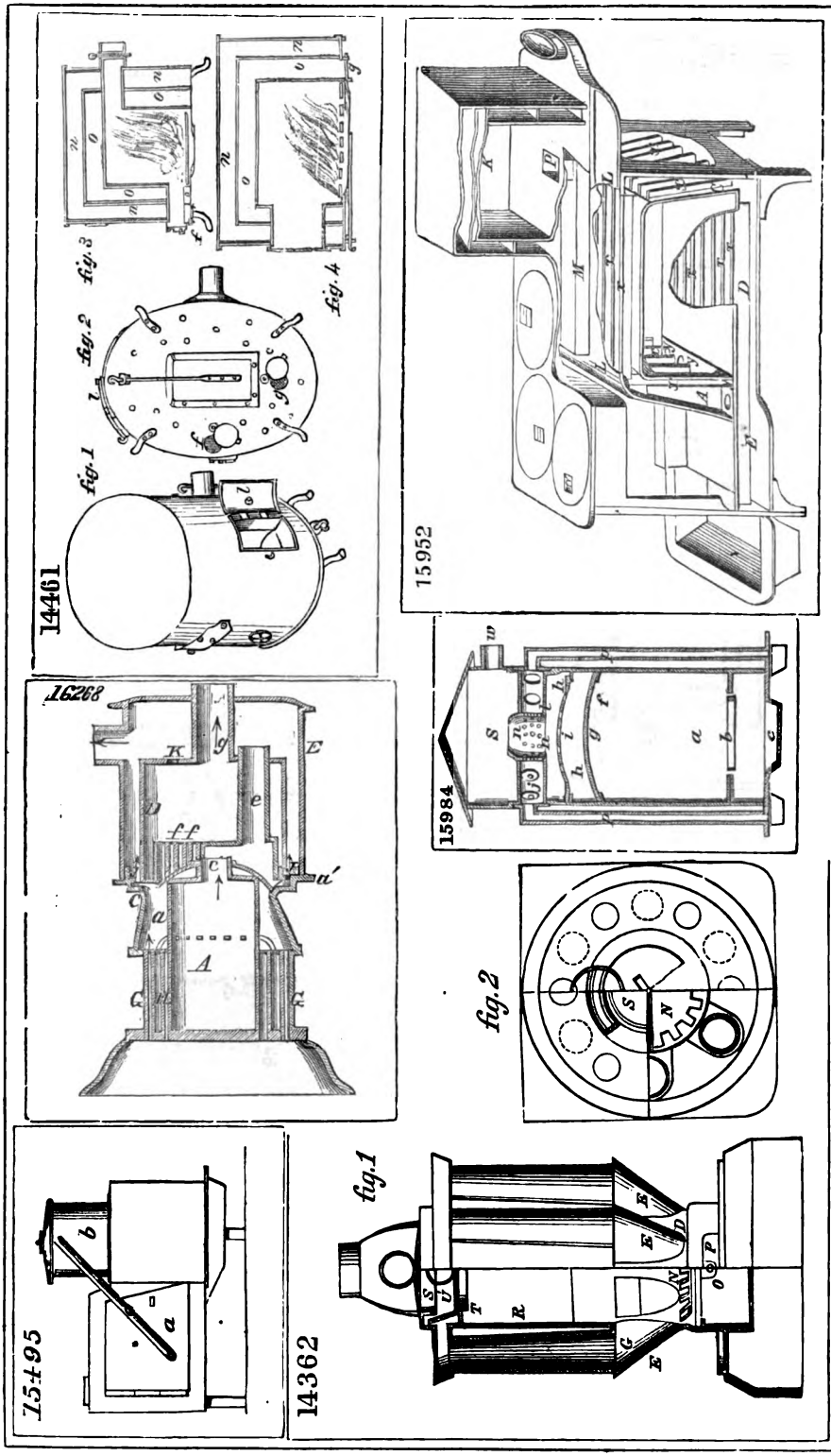
14461
fig. 1
fig. 2
fig. 3
fig. 4
15952
15984
16268
fig. 2
fig. 1
14362
75495

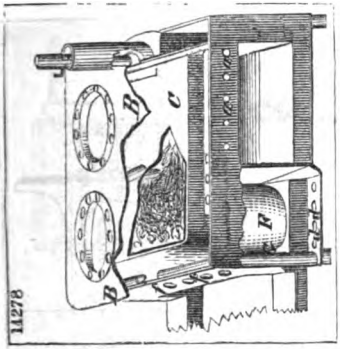

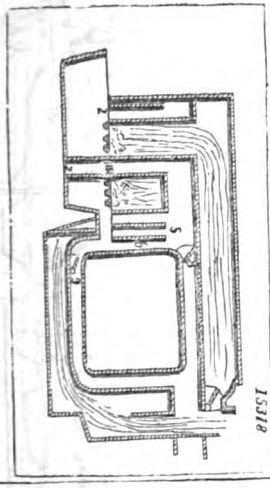

14648

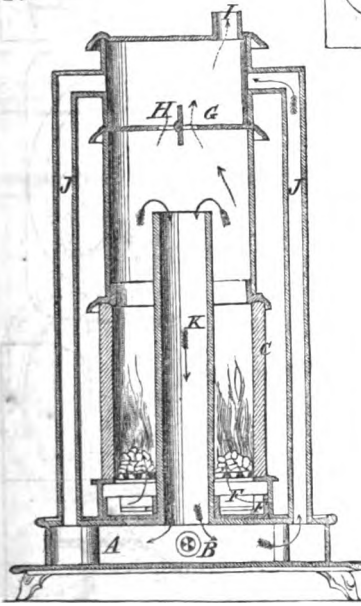

74467

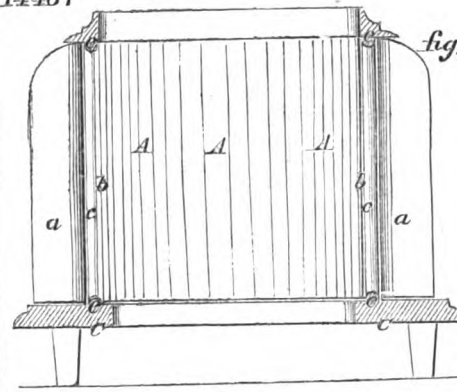

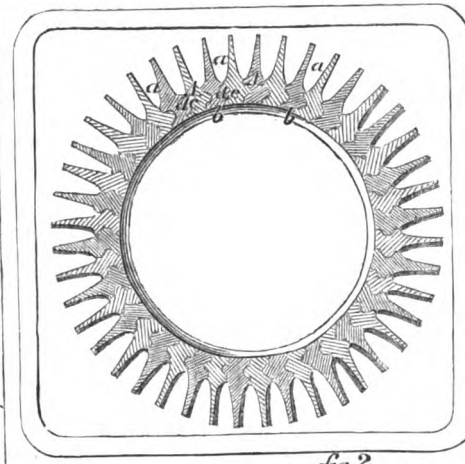

15023

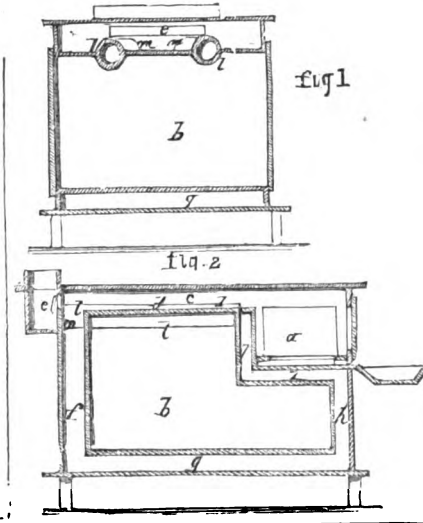

Digitized by Google

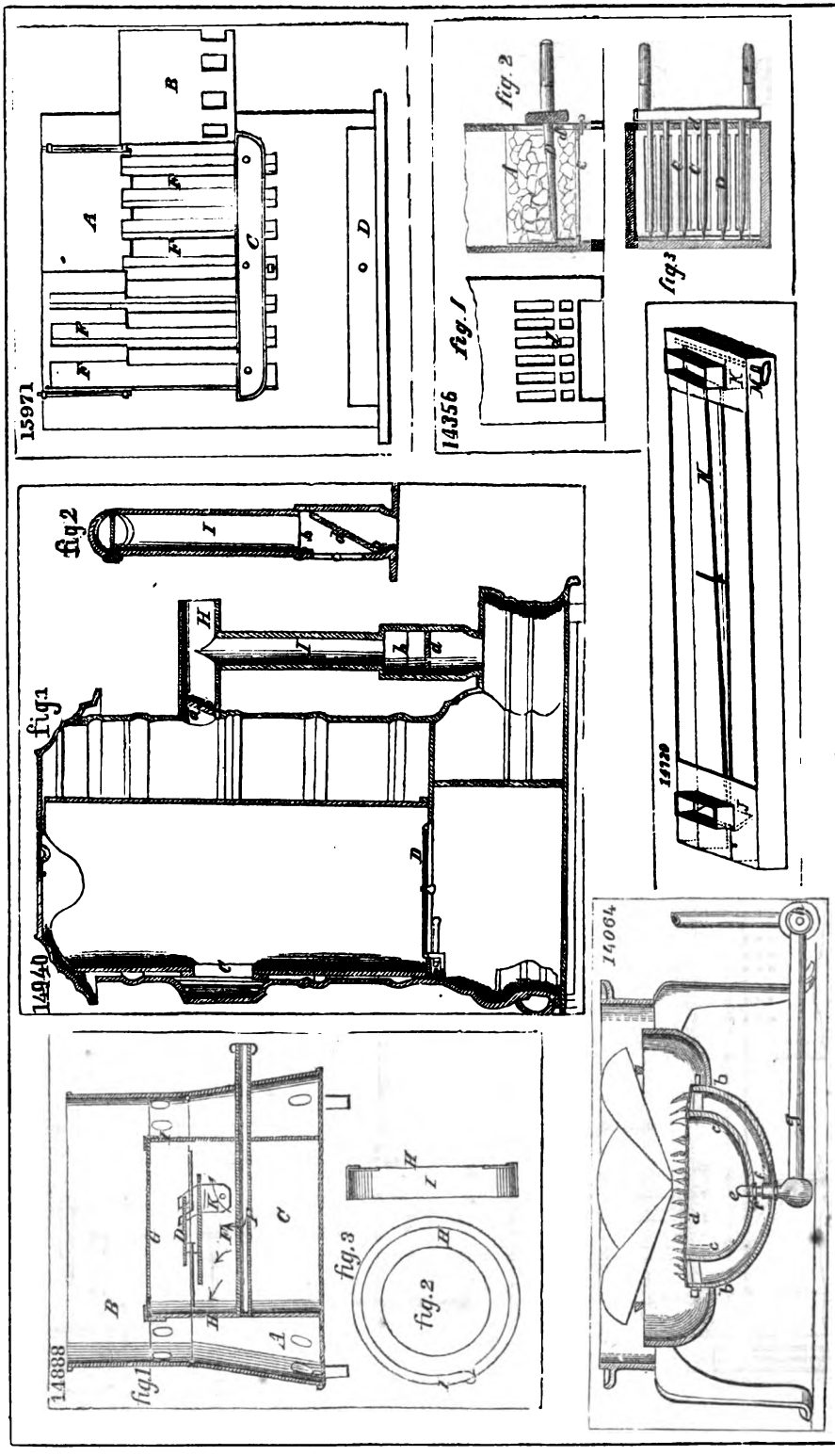

Digitized by Google

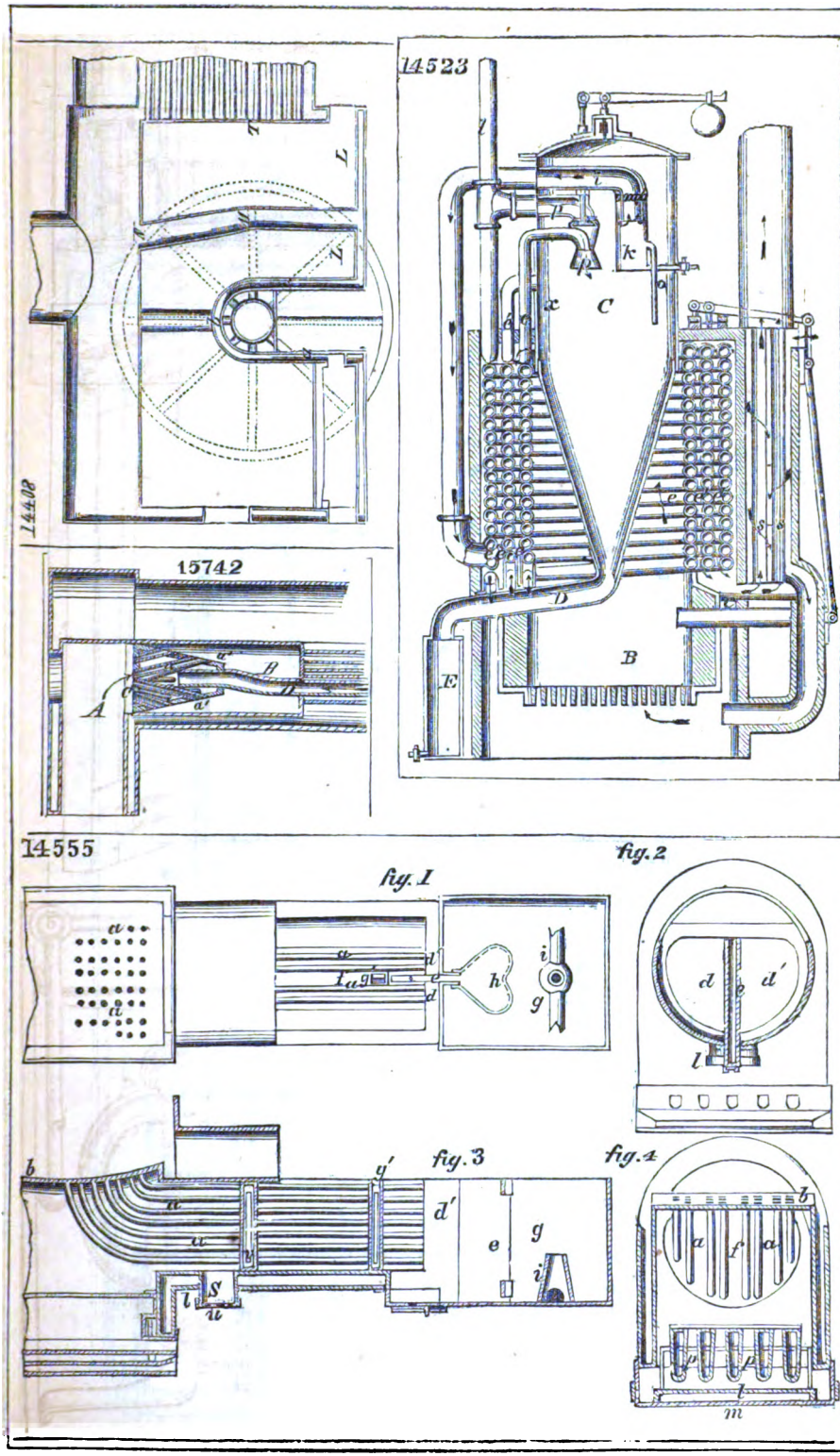

Digitized by Google

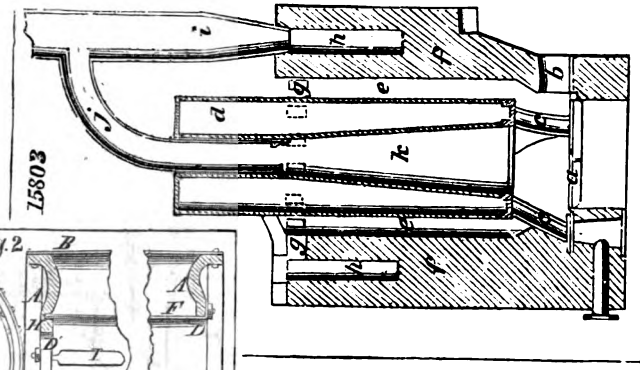

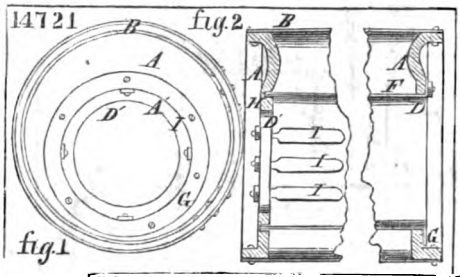

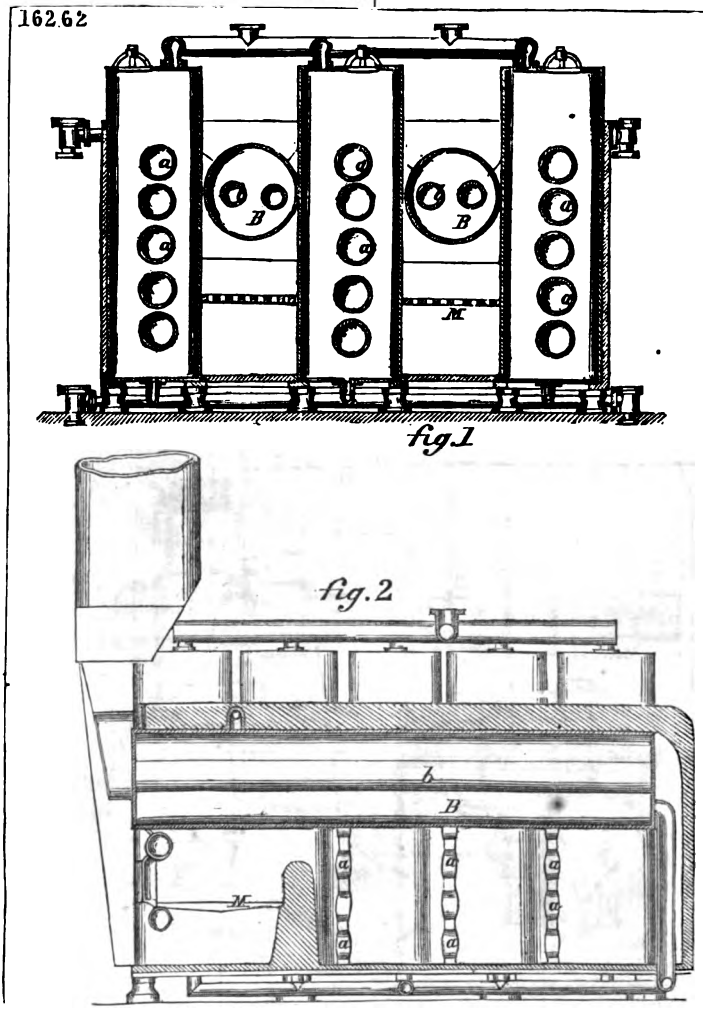

Digitized by Google

15870

14033

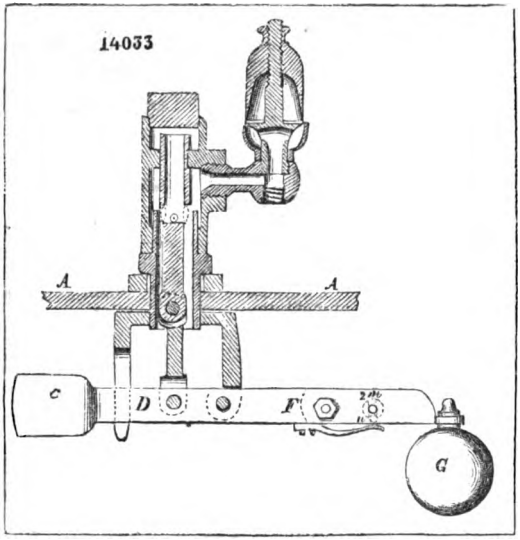

15579

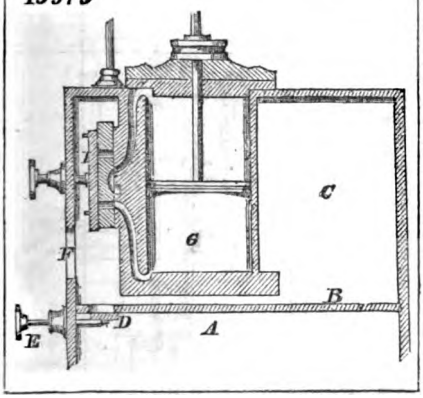

16092

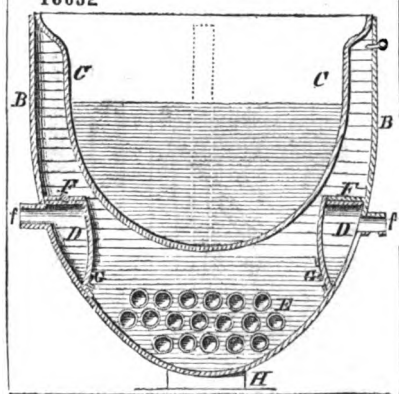

14449

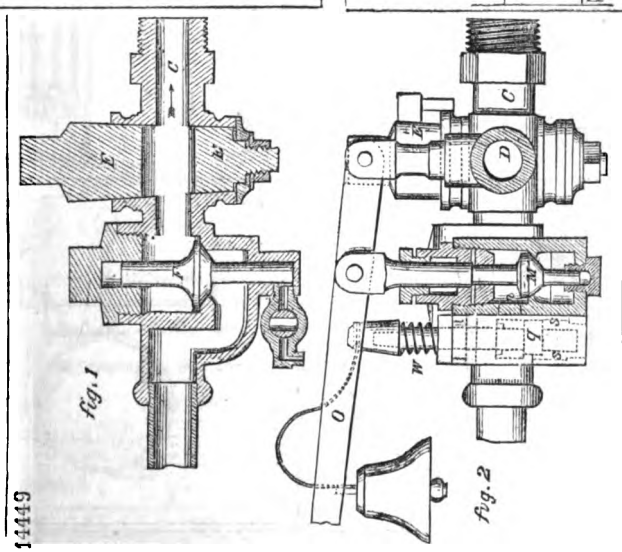

Digitized by Google

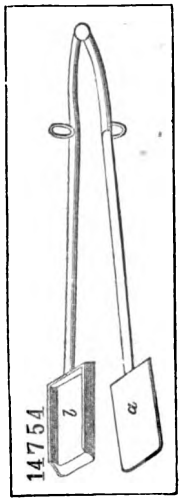

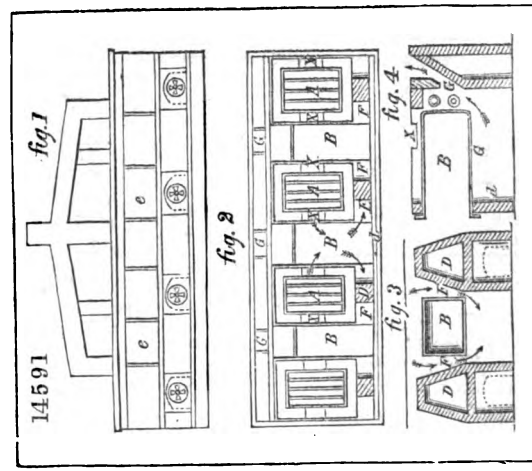

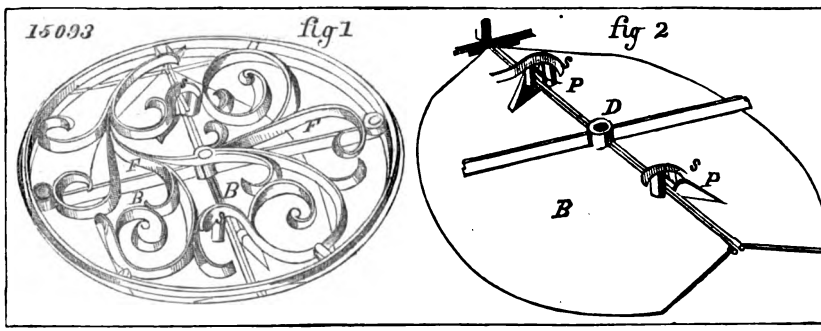

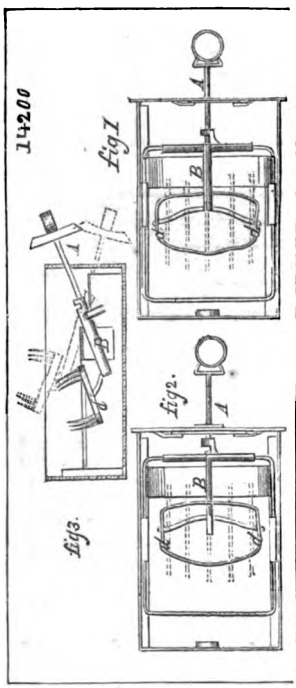

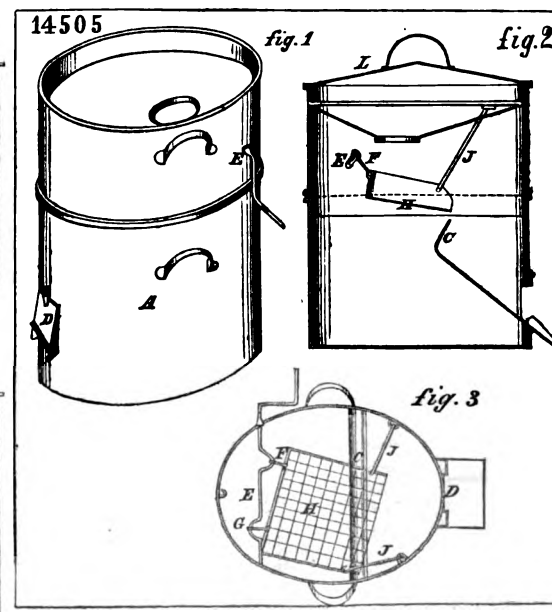

Digitized by Google

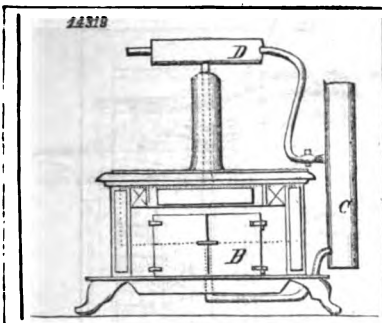

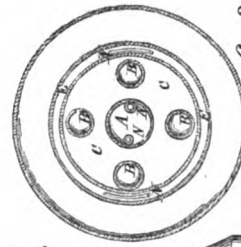

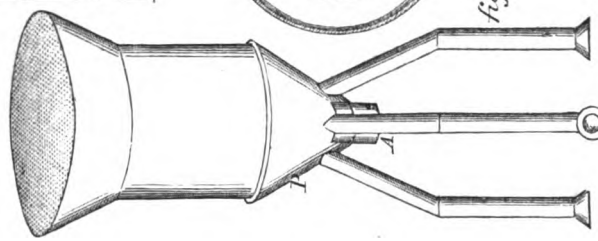

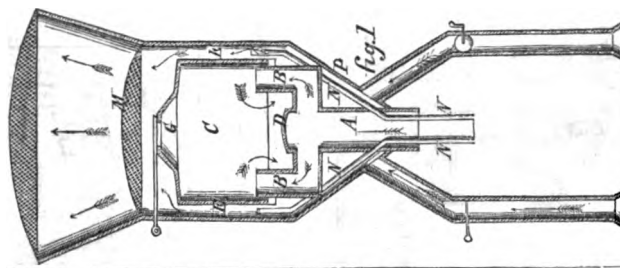

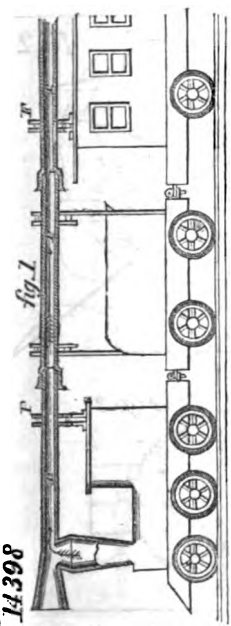

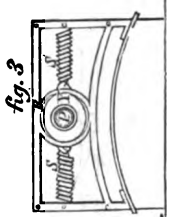

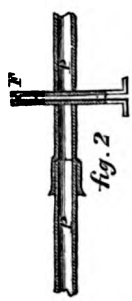

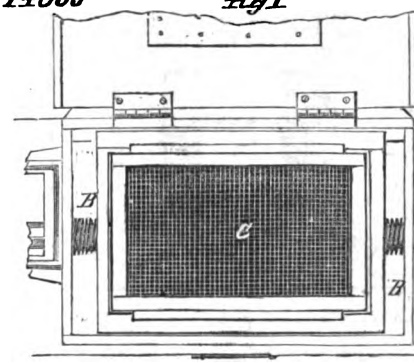

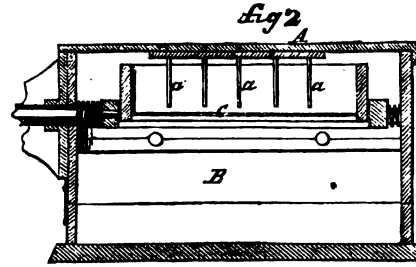

Digitized by Google

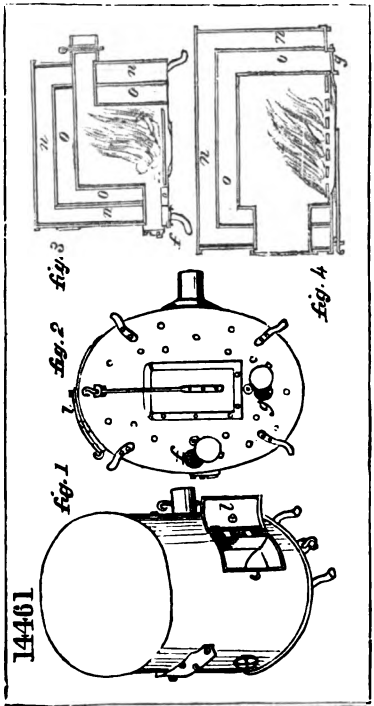

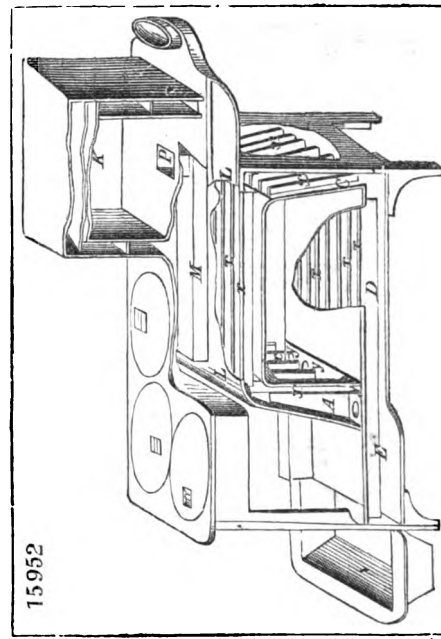

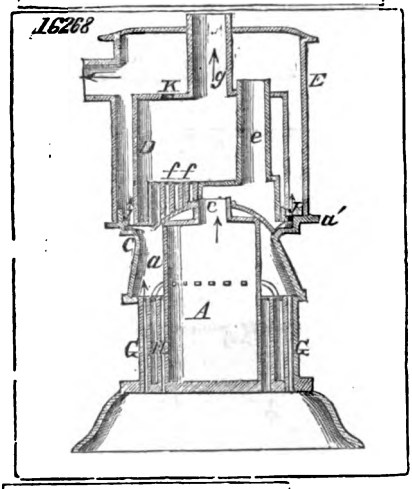

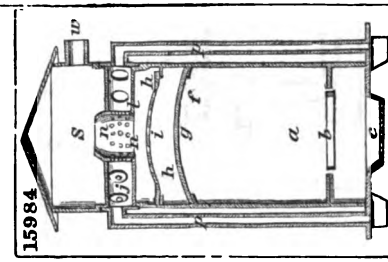

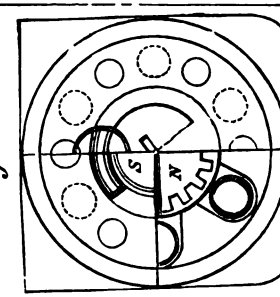

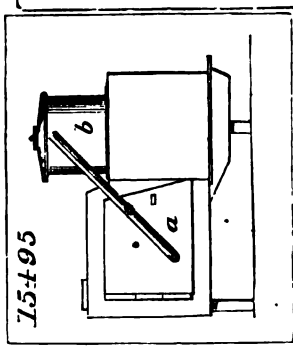

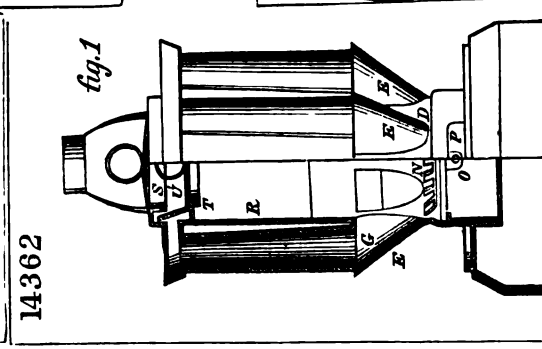

Digitized by Google

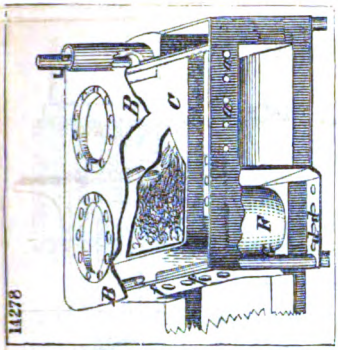

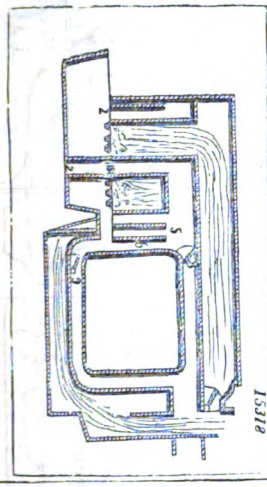

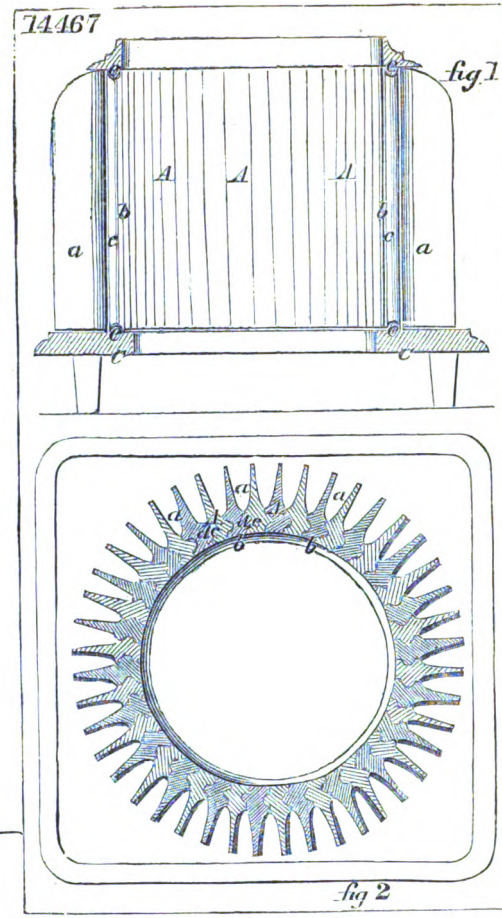

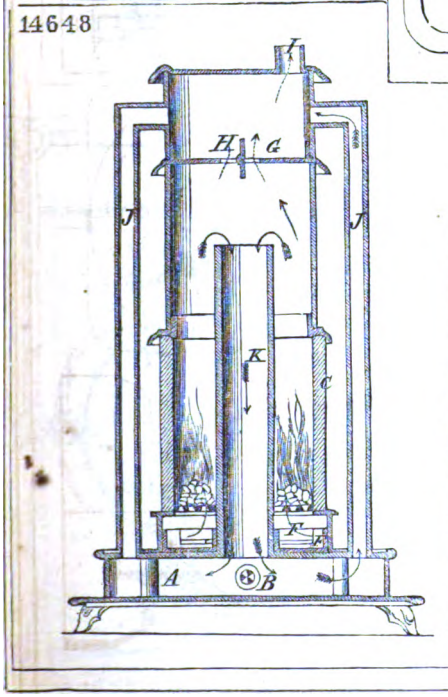

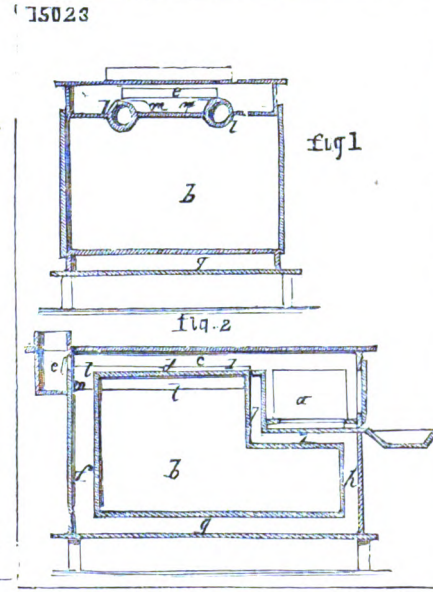

Digitized by Google

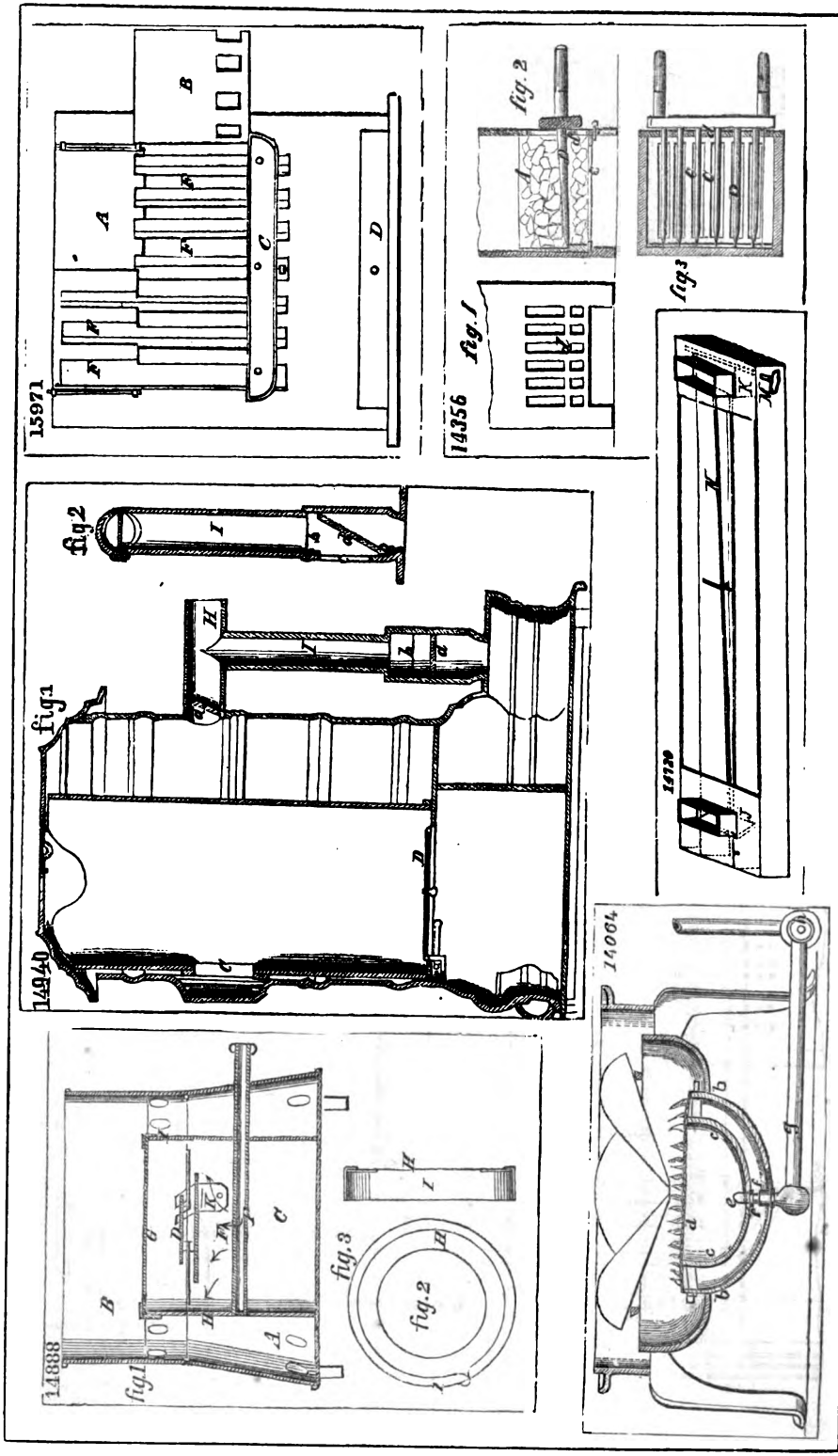

Digitized by Google

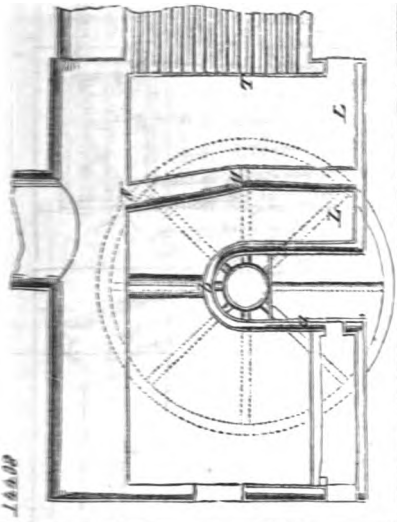

14523

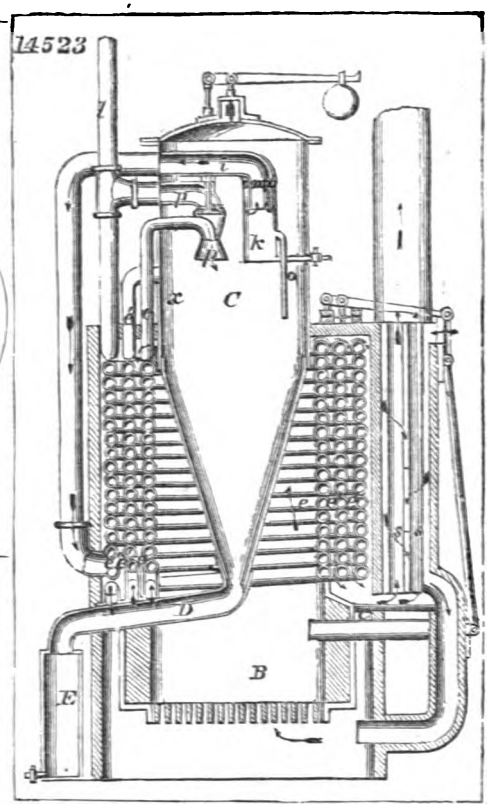

15742

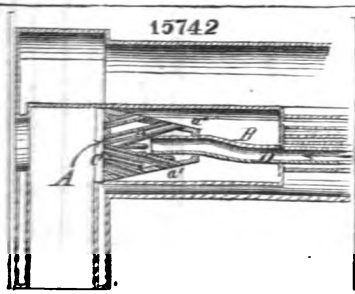

14555

fig. 1

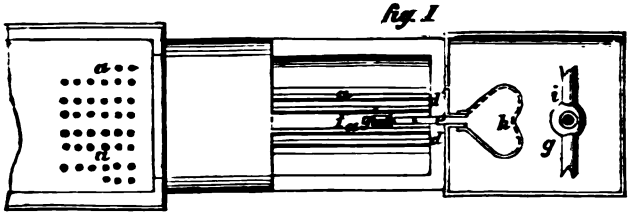

fig. 2

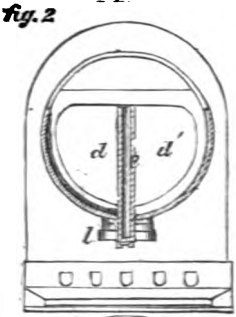

fig. 3

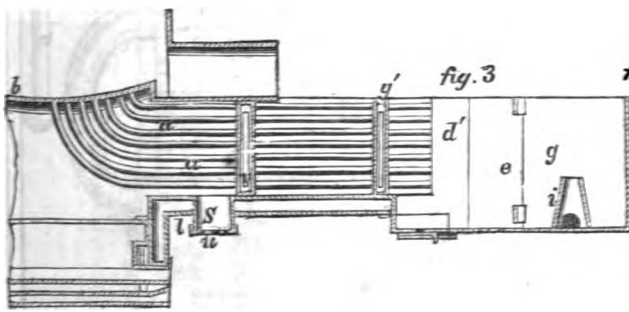

fig. 4

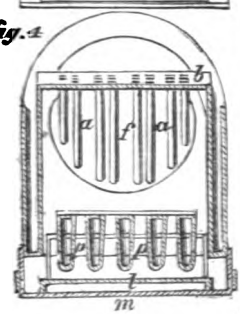

Digitized by Google

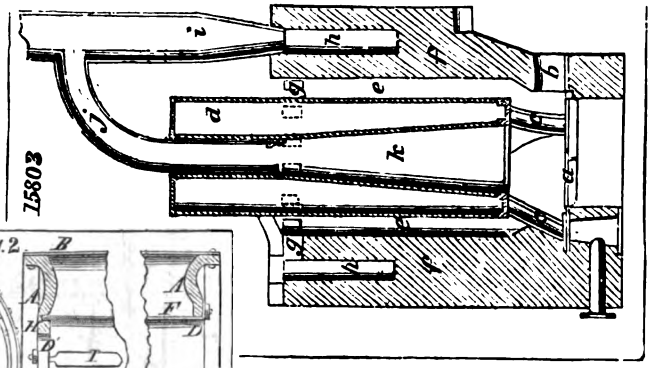

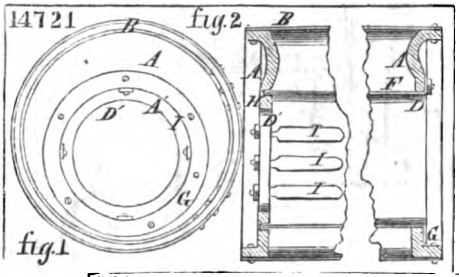

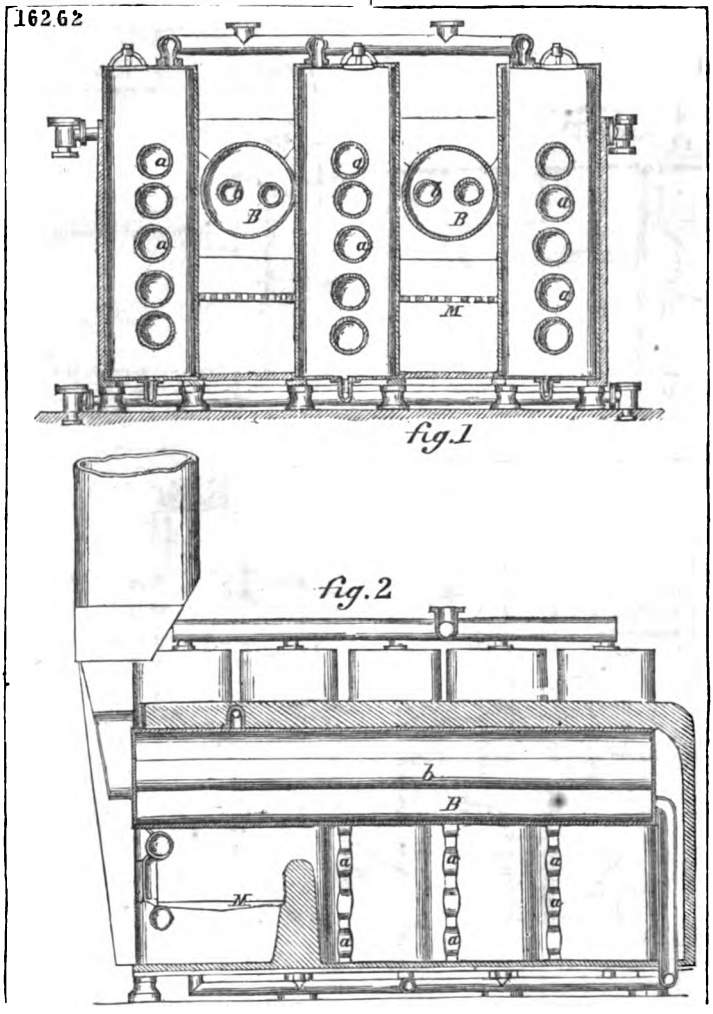

Digitized by Google

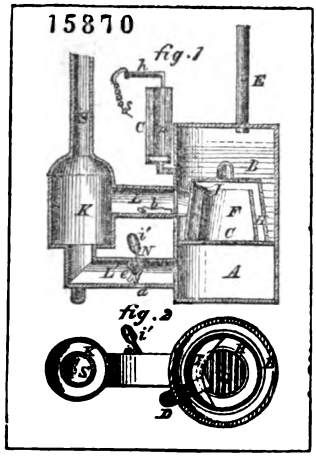

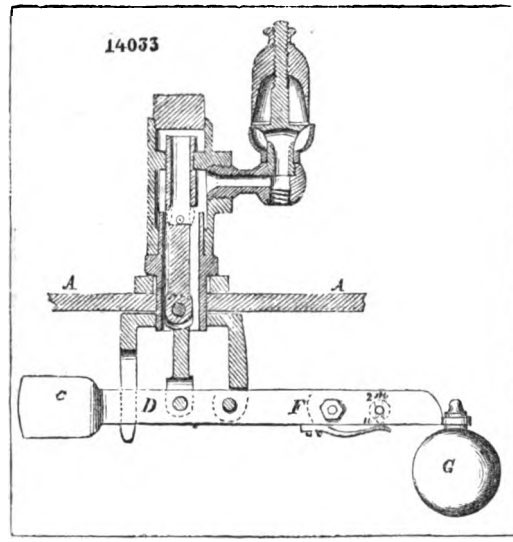

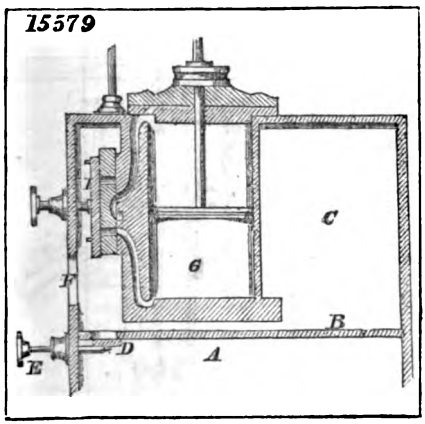

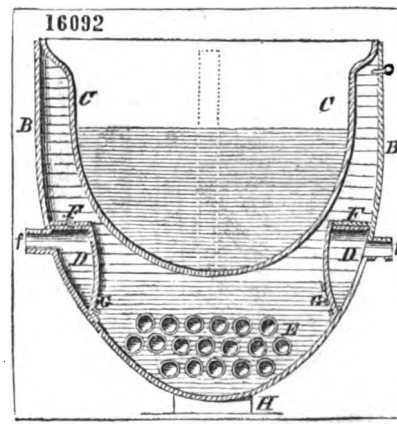

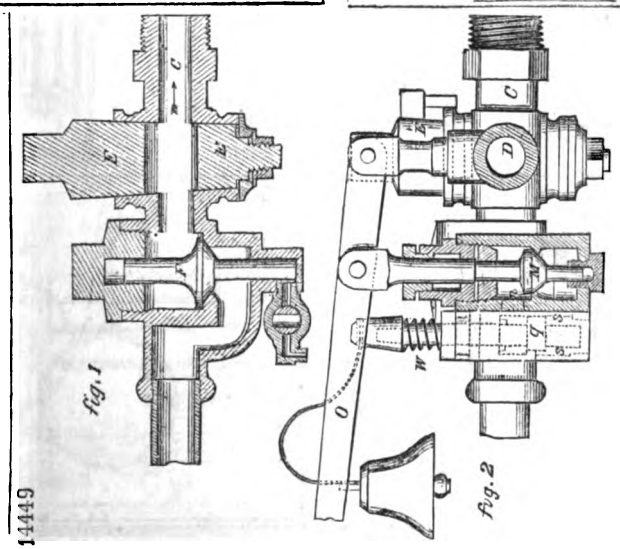

Digitized by Google

14191

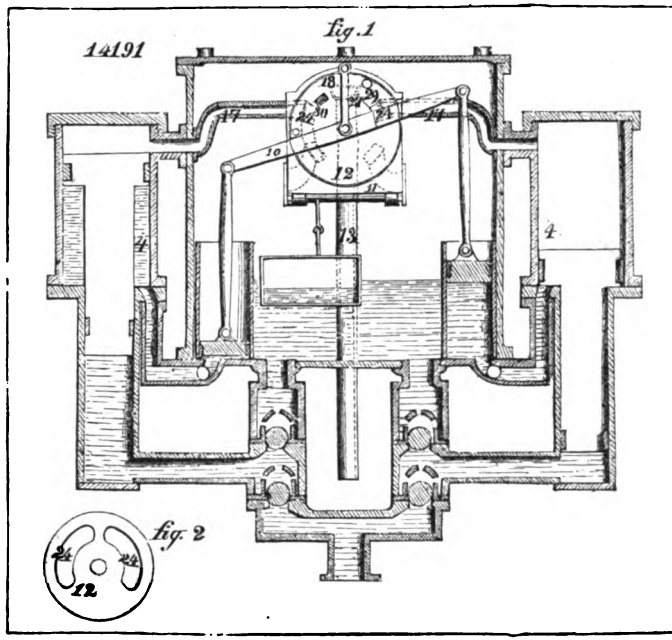

15424

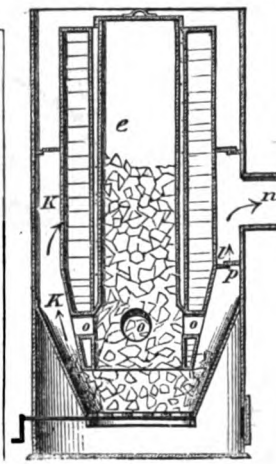

15825

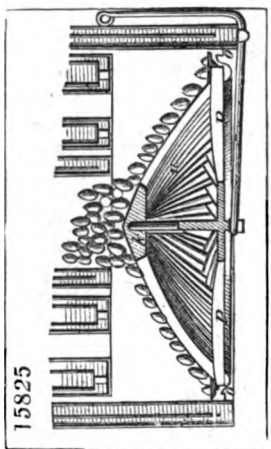

16206

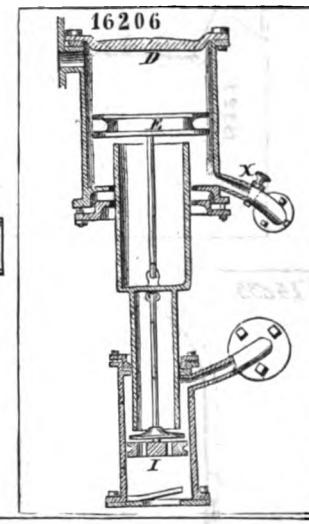

14959

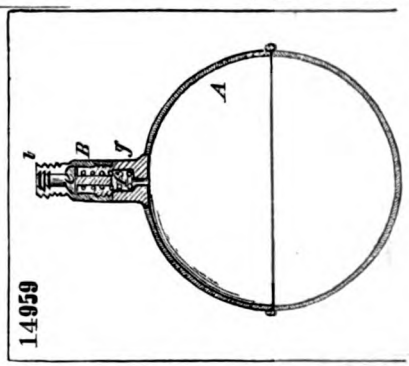

16173

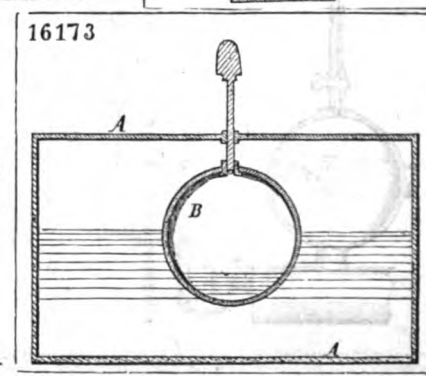

Digitized by Google

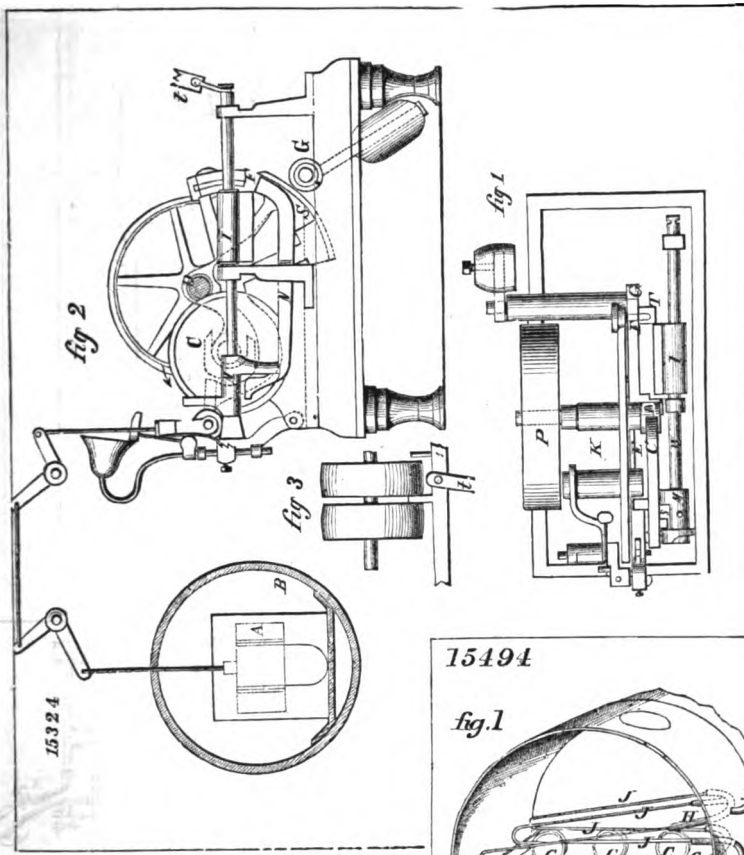

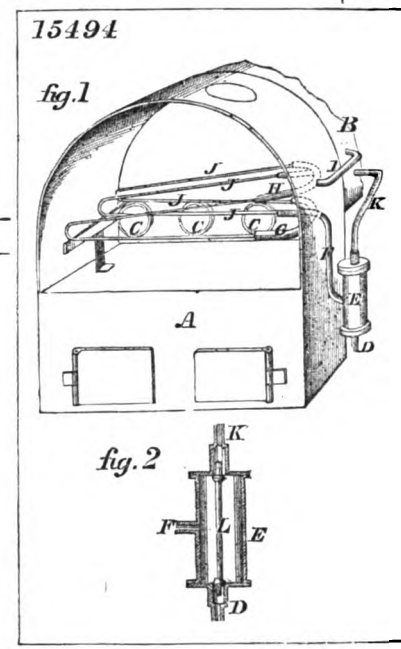

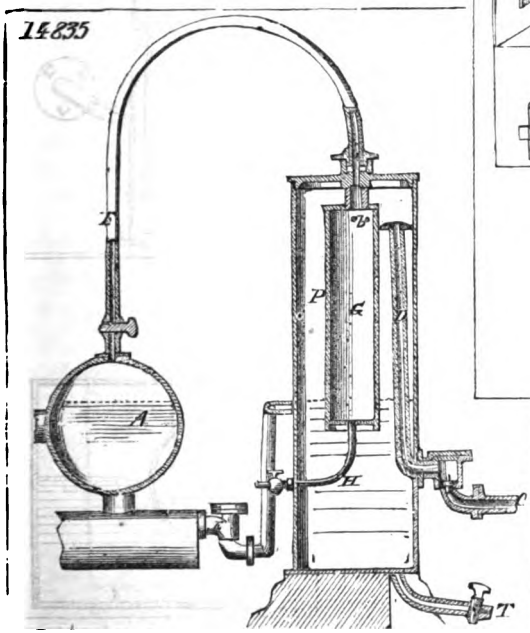

Digitized by Google

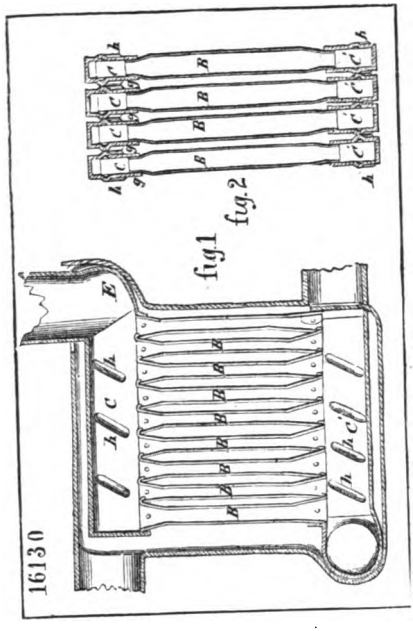

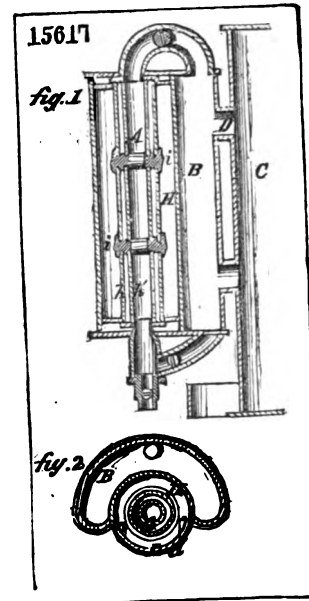

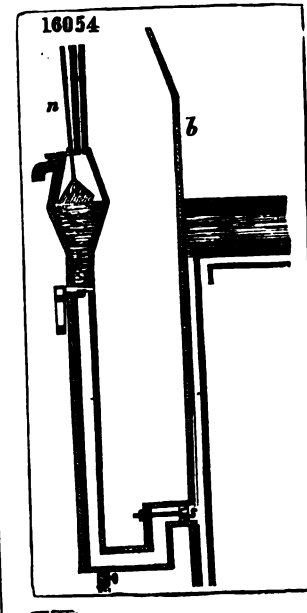

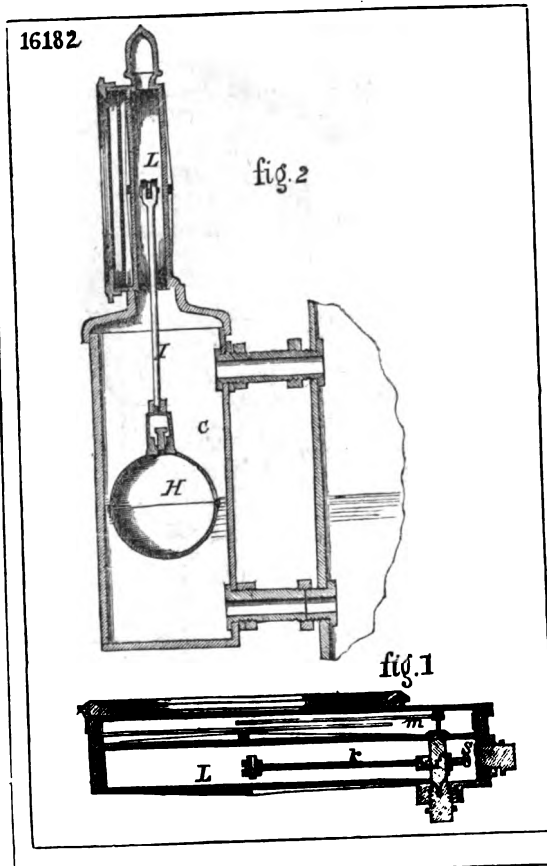

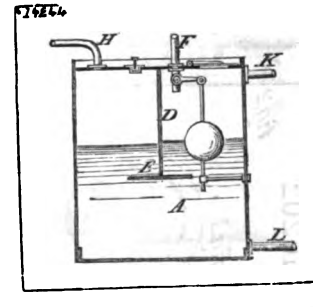

Digitized by Google

14954

fig. 1

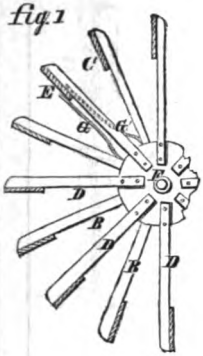

fig. 2

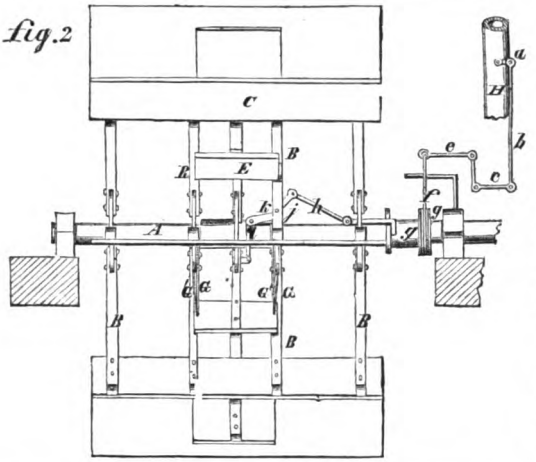

14239

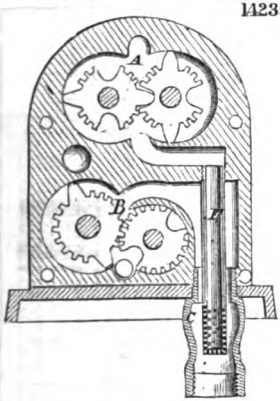

15056

fig 1

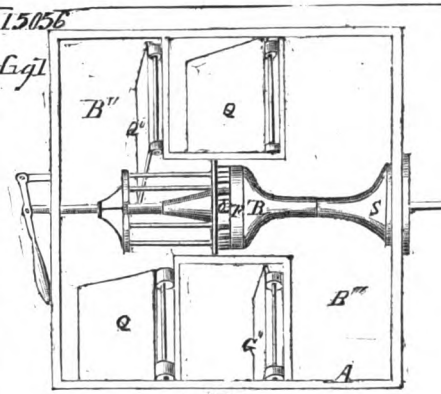

fig 2

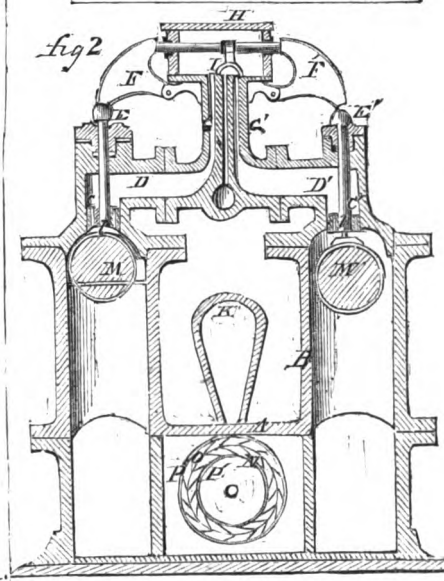

16202

fig. 2

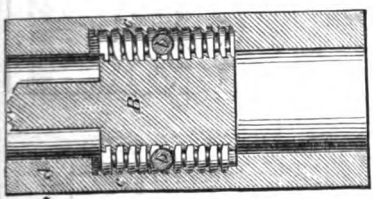

fig. 1

Digitized by Google

14967

fig.1

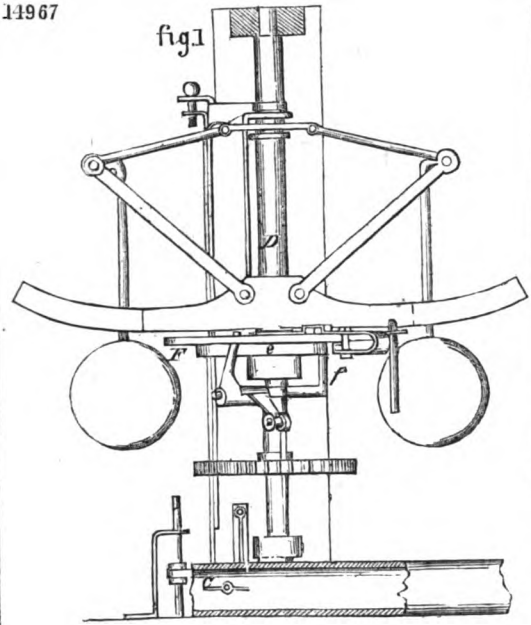

15181

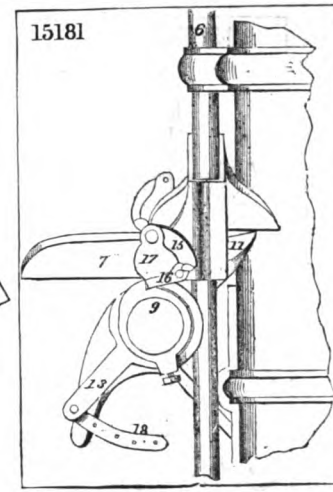

fig.2

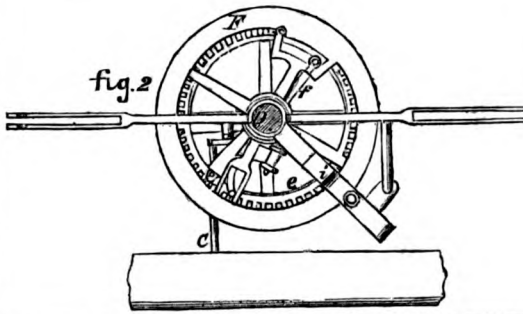

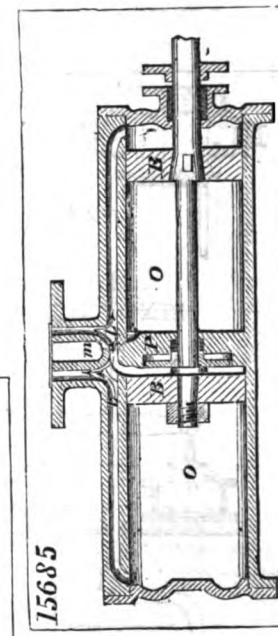

15122

fig.1

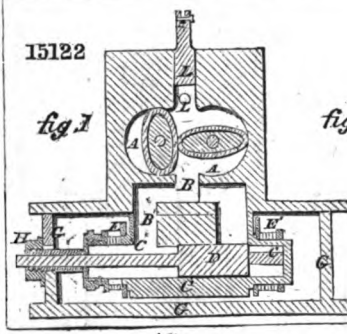

fig 2

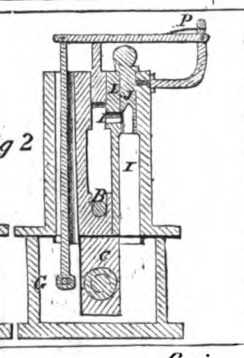

14124

fig.1

fig.2

fig.3

Digitized by Google

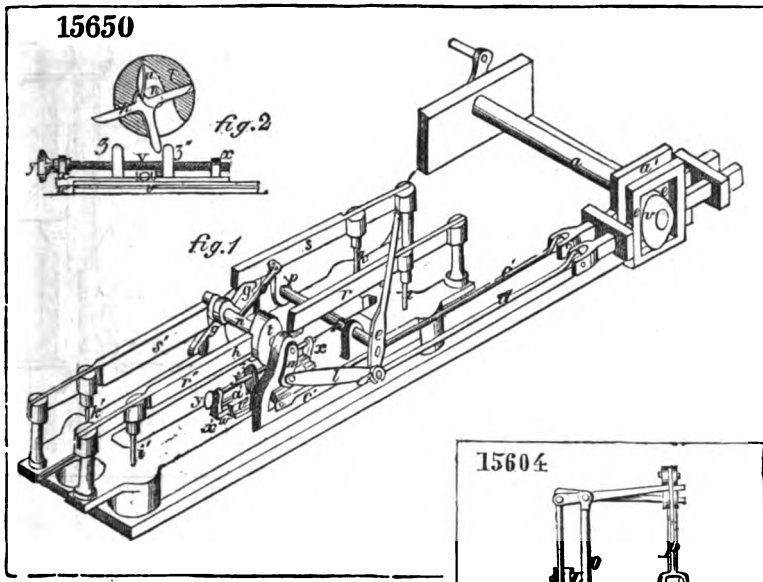

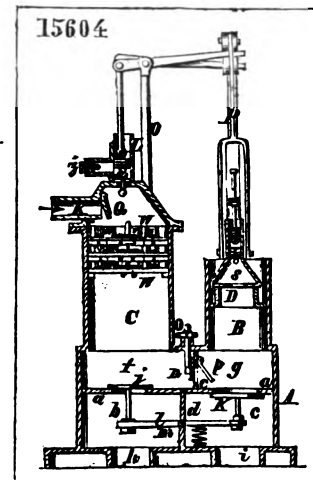

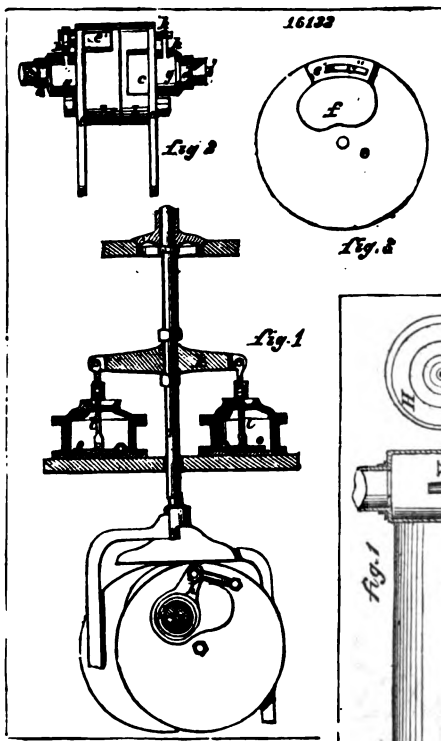

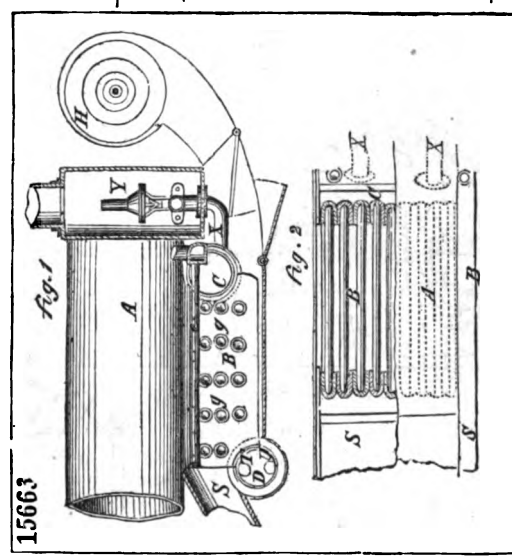

Digitized by Google

15667

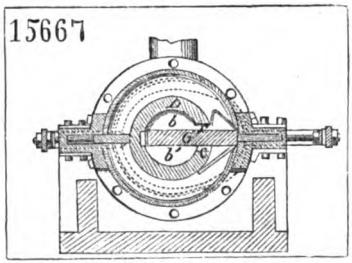

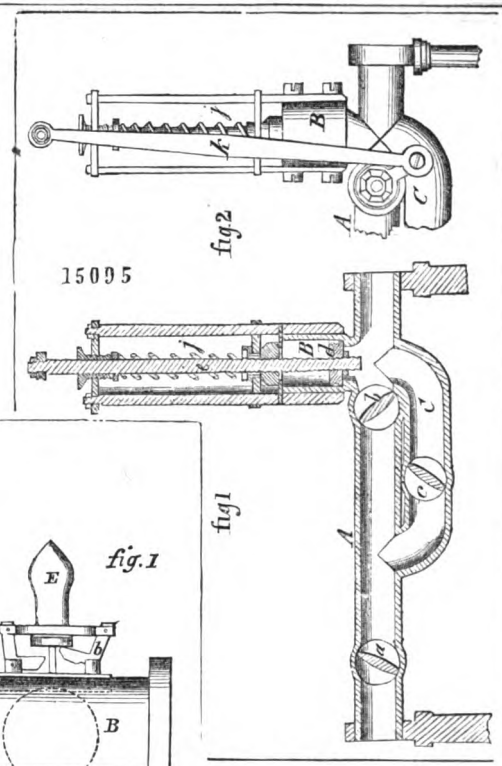

14486

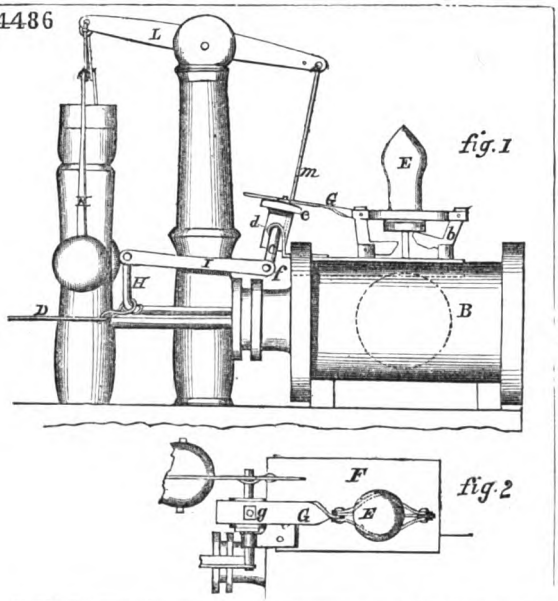

14515

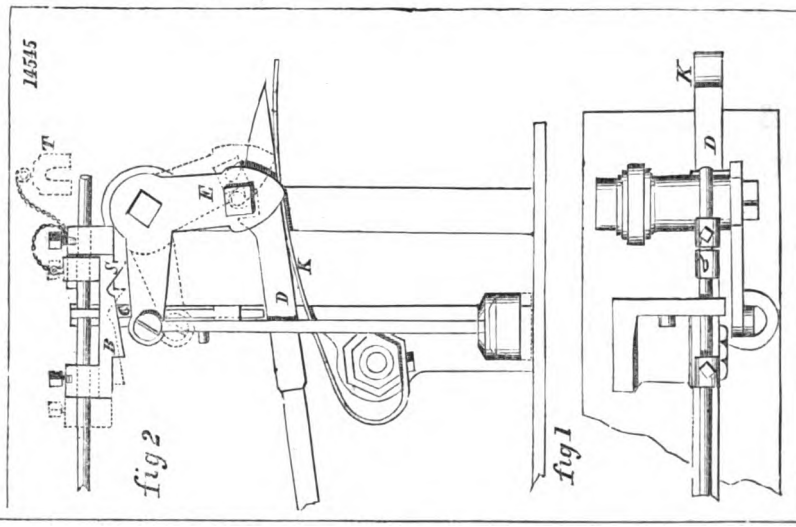

Digitized by Google

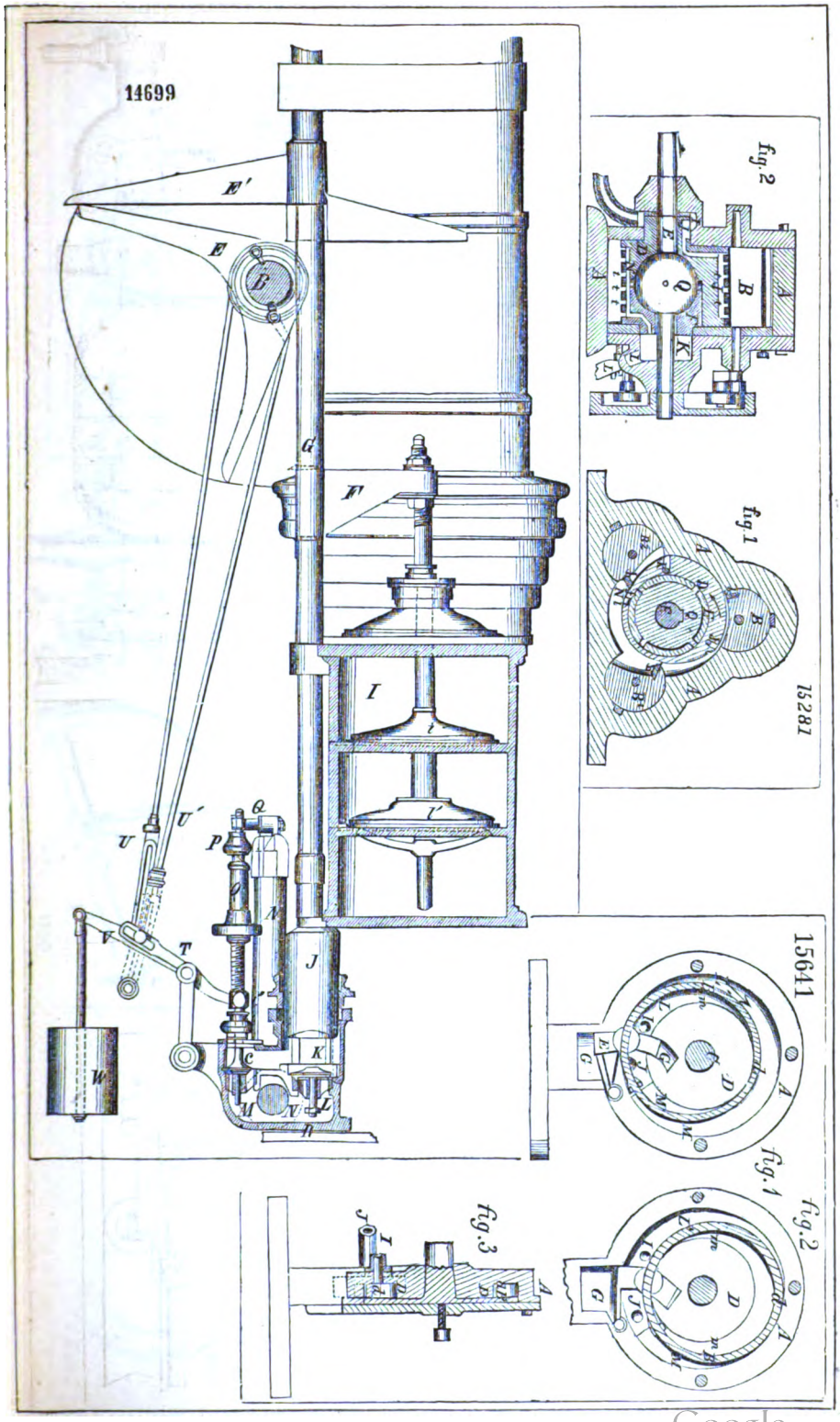

Digitized by Google

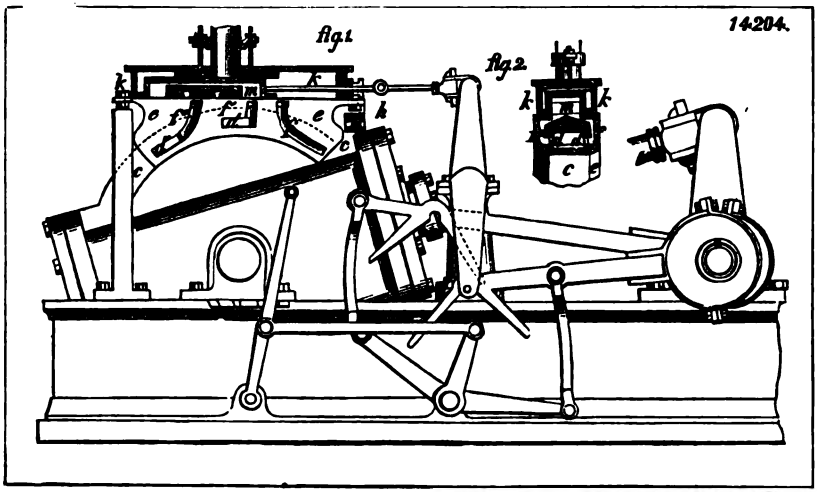

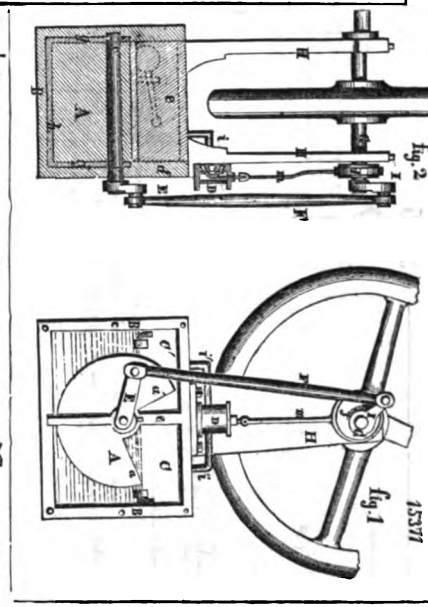

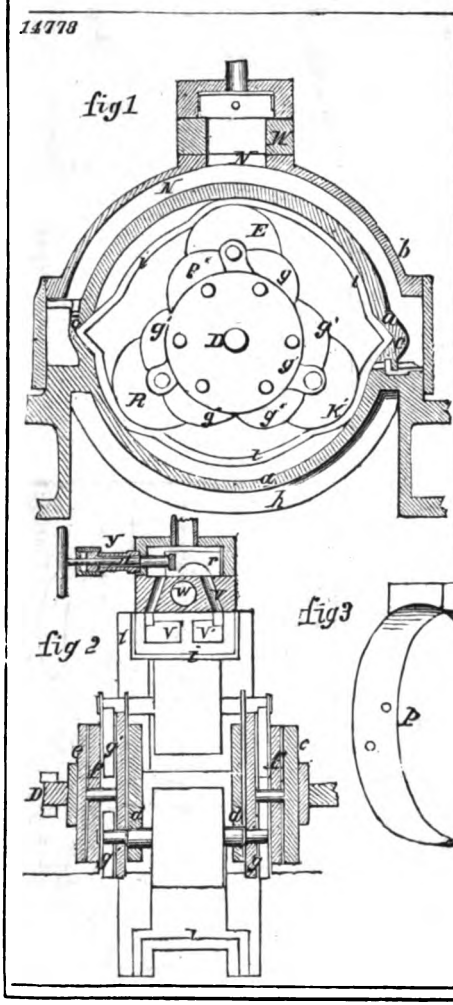

Digitized by Google

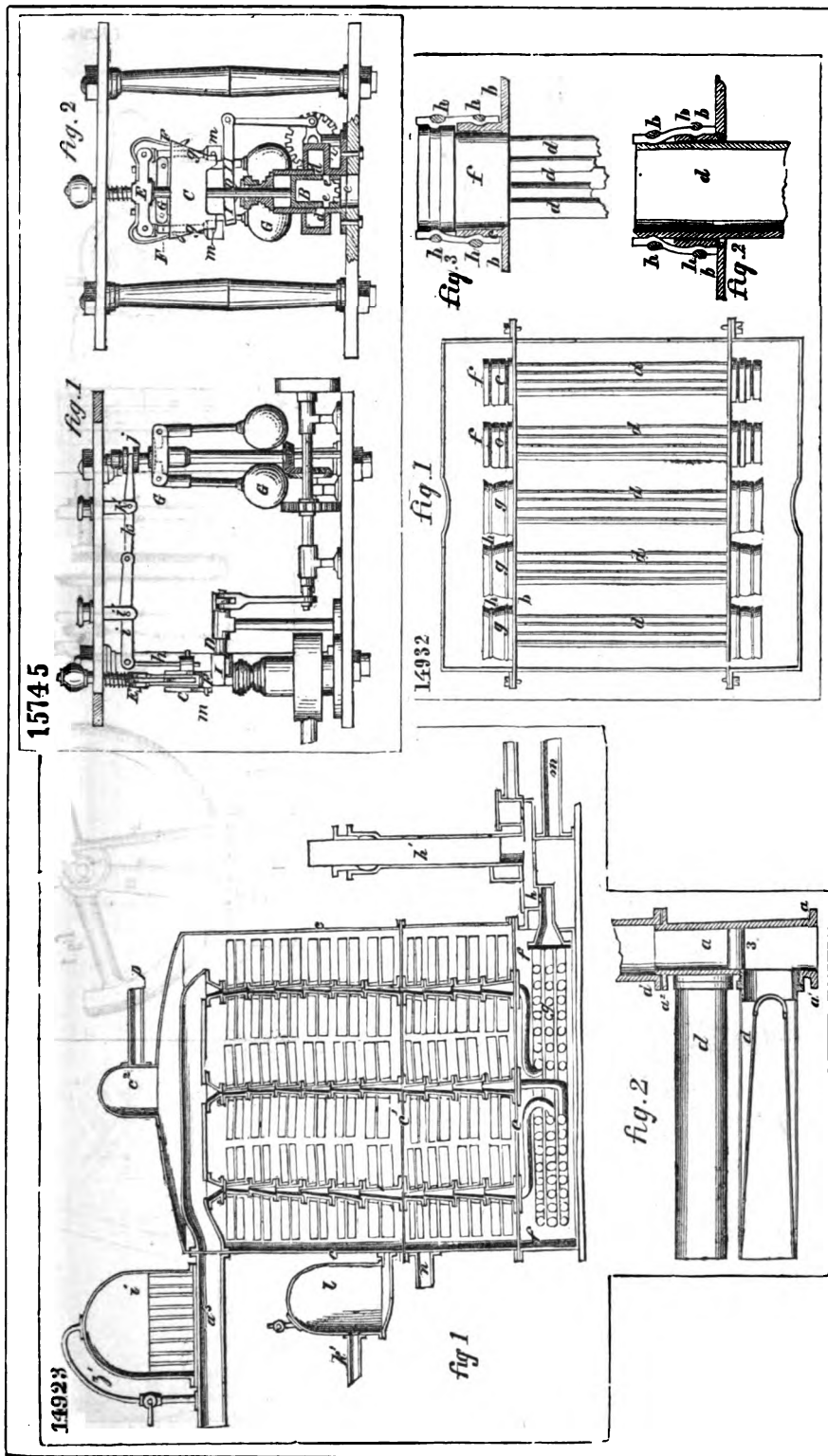

Digitized by Google

14204.

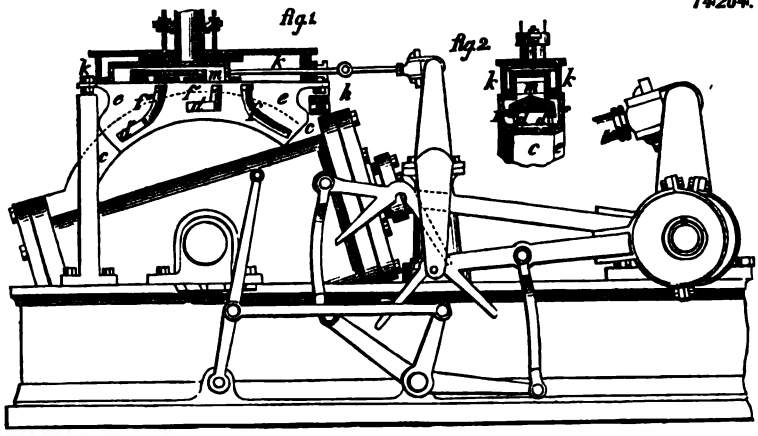

14778

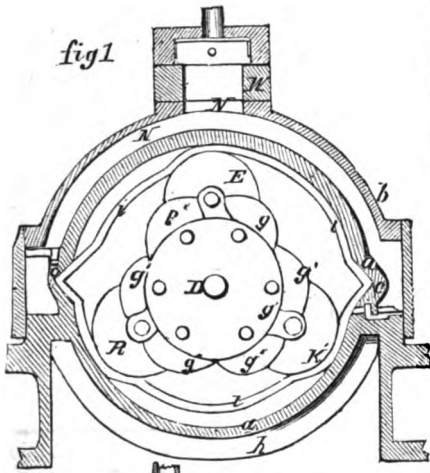

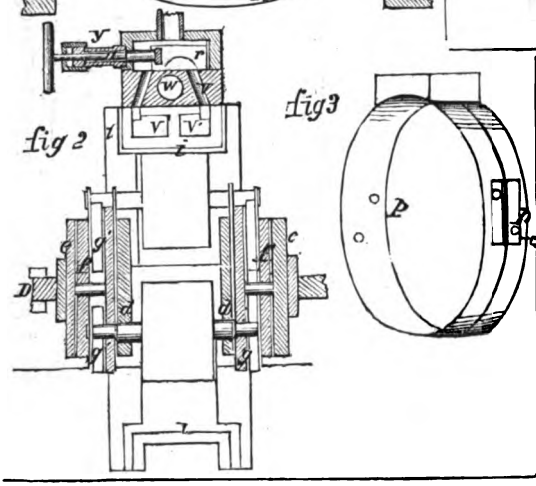

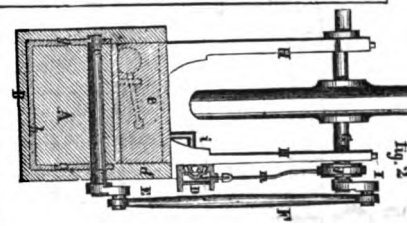

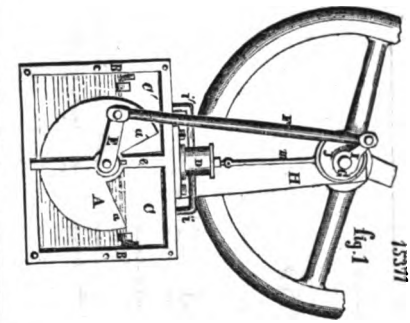

Digitized by Google

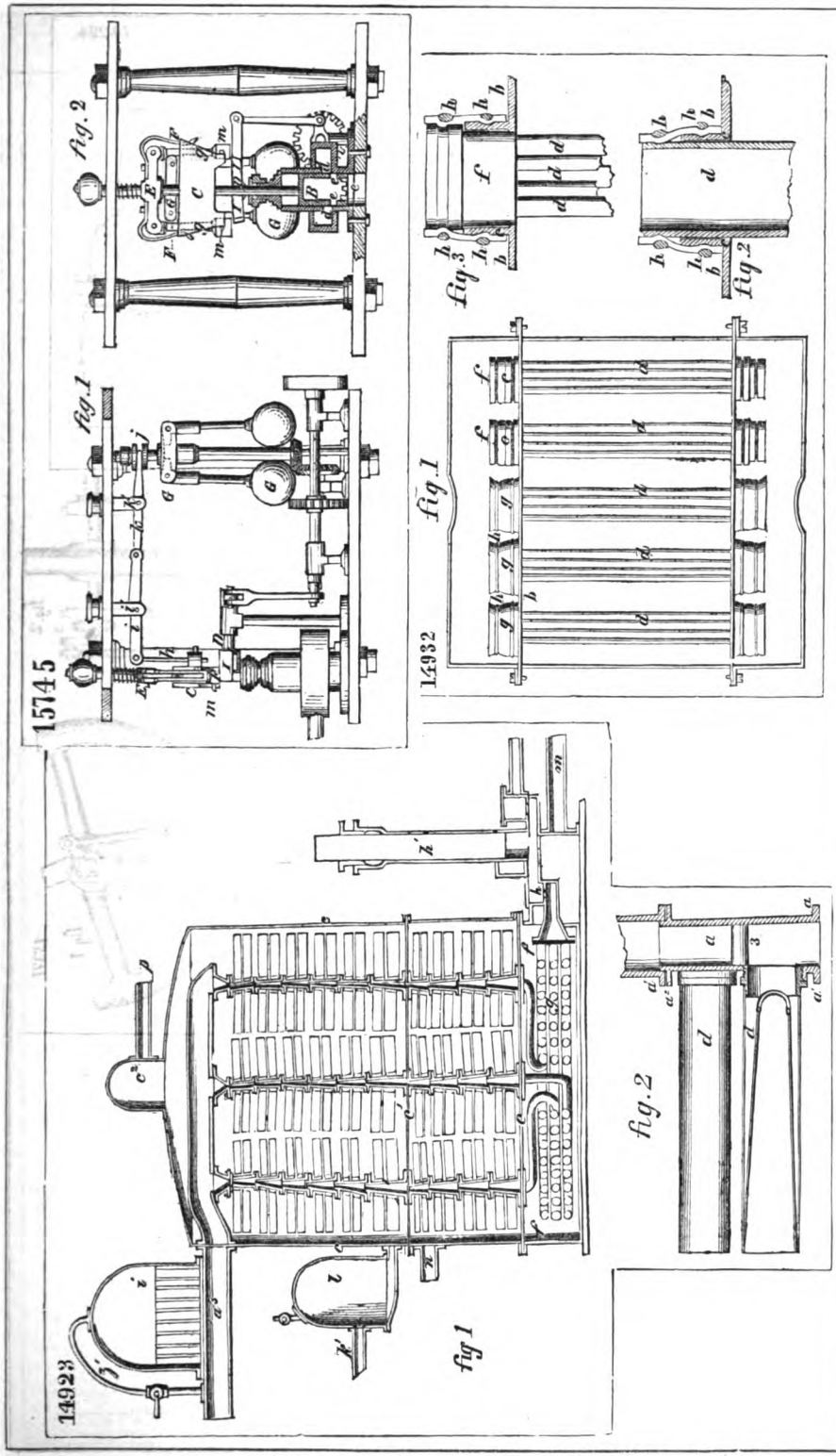
15745
fig. 1
fig. 2
14932
fig. 1
fig. 2
fig. 3
14923
fig 1
fig. 2

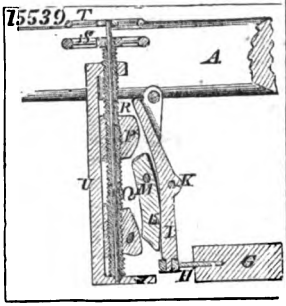

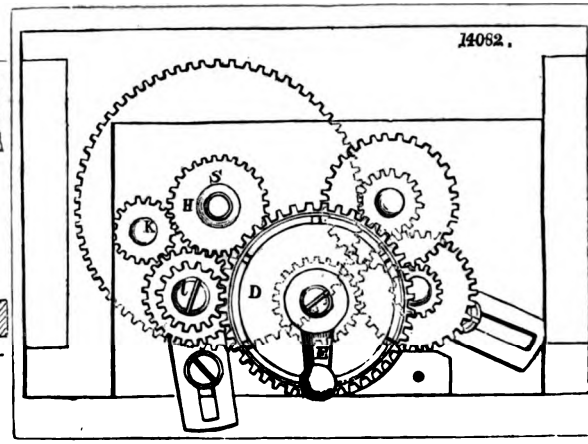

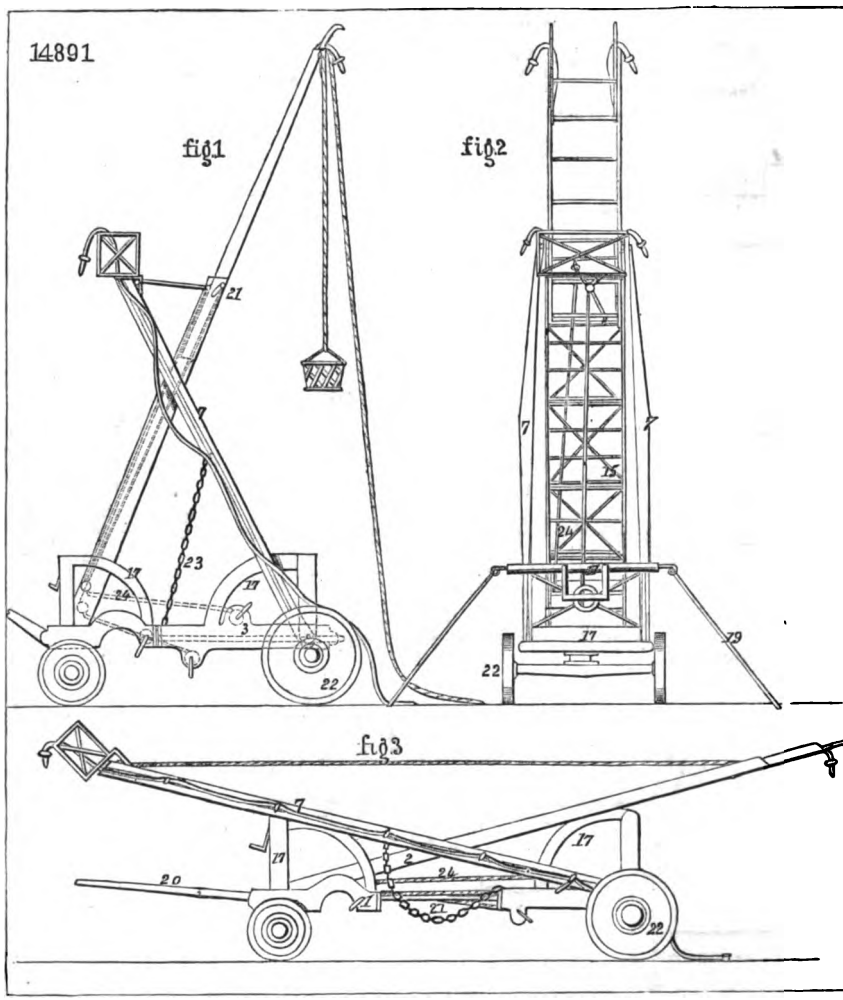

Digitized by Google

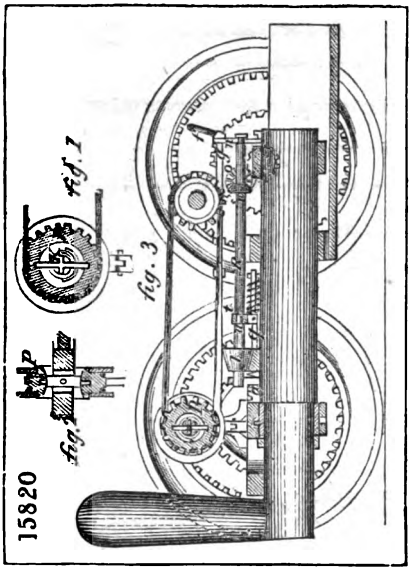

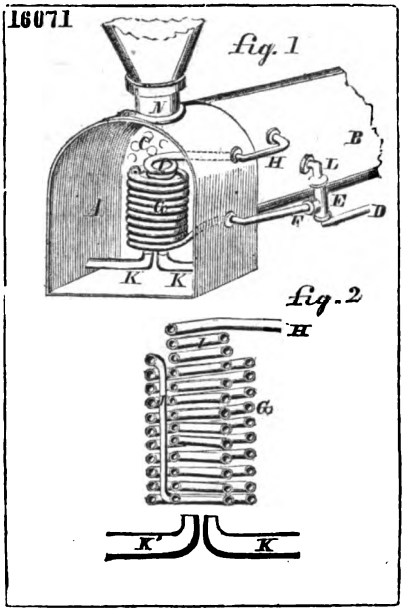

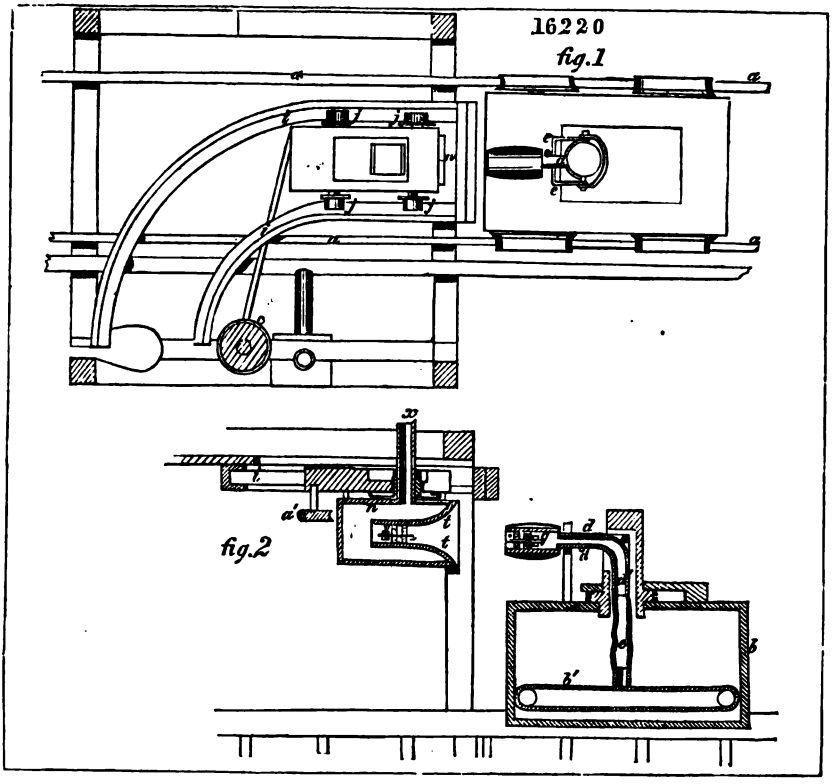

Digitized by Google

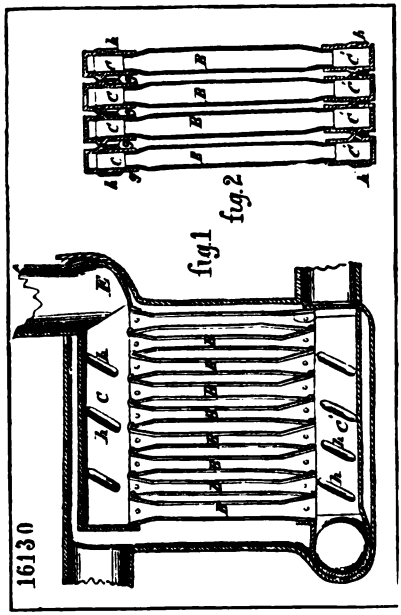
16130
fig.1
fig.2

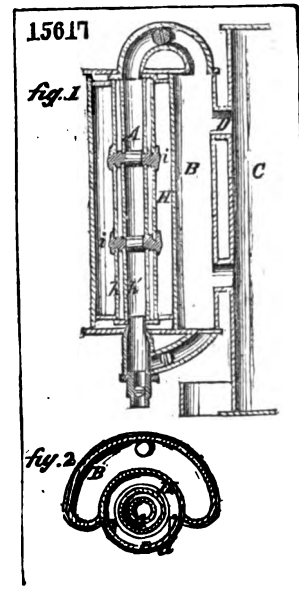
15617
fig.1
fig.2

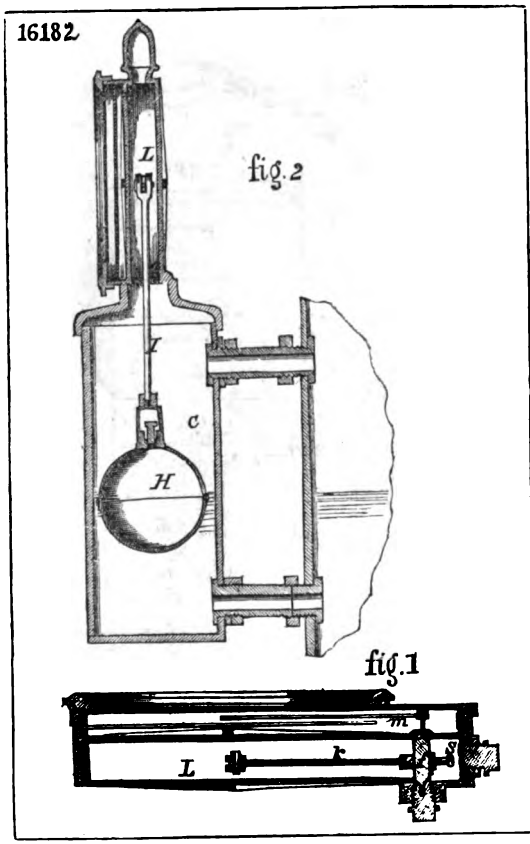
16182
fig.2
fig.1

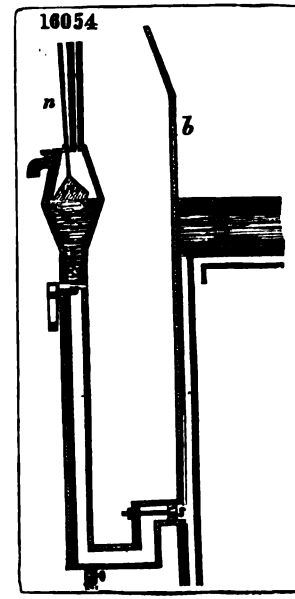
16054

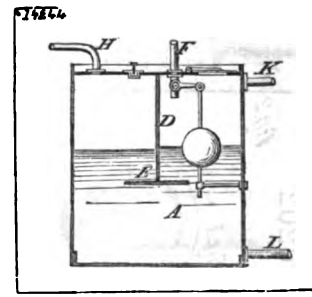
14464

14954

fig. 1

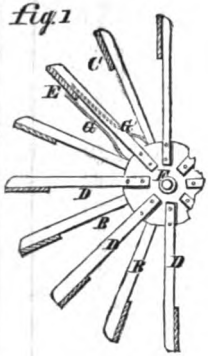

fig. 2

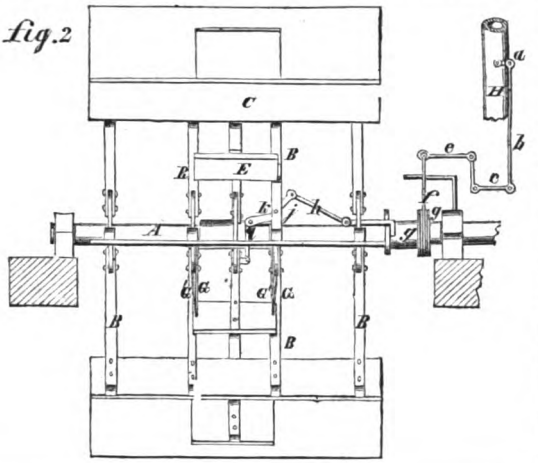

14239

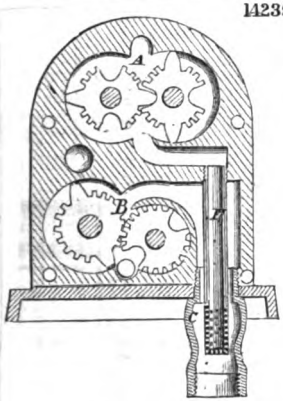

15056

fig 1

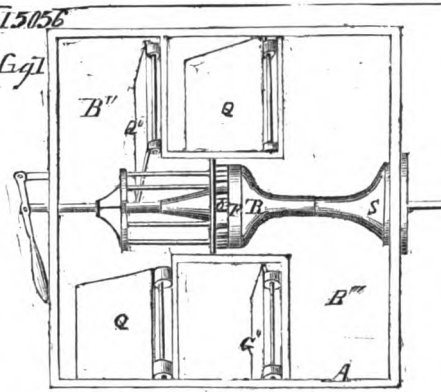

fig 2

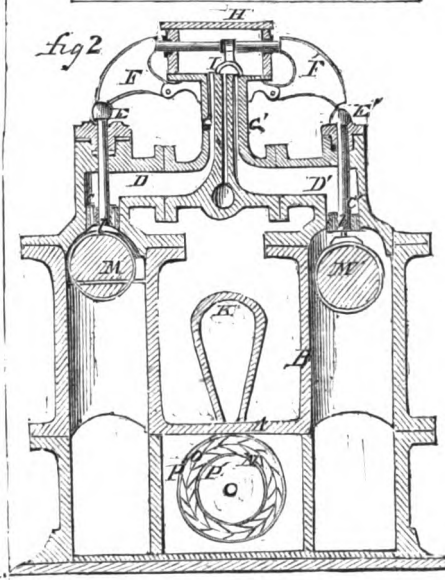

16202

fig. 2

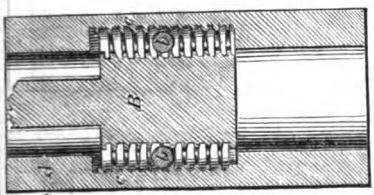

fig. 1

Digitized by Google

14967

fig 1

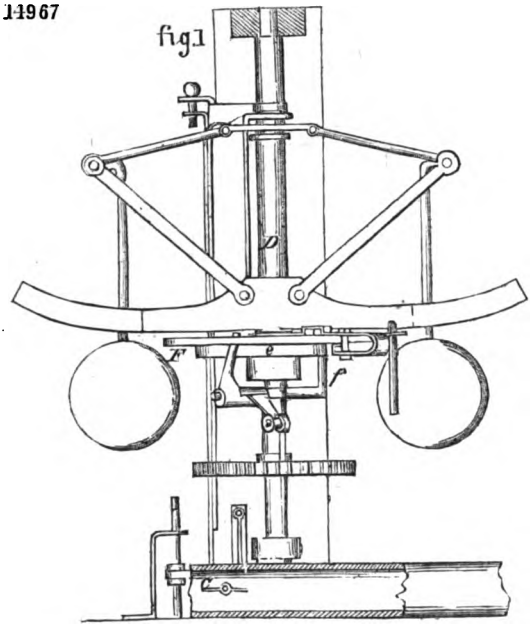

15181

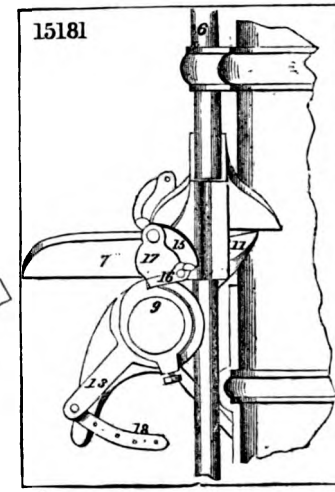

fig. 2

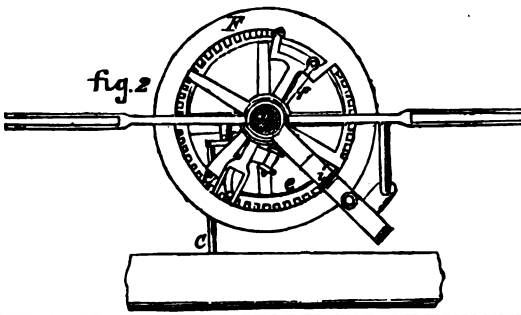

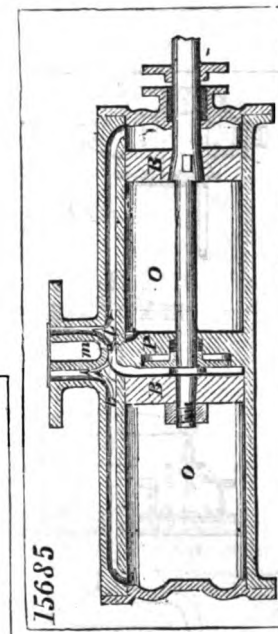

15685

15122

fig 1

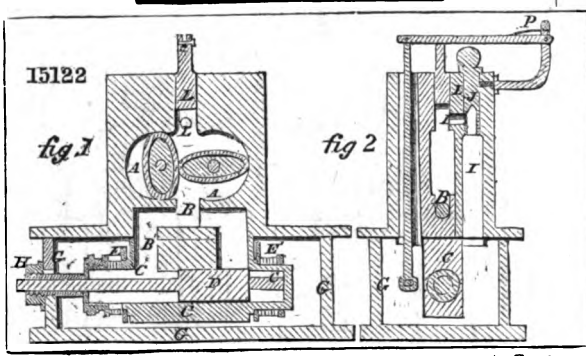

fig 2

14124

fig. 1

fig. 2

fig 3

Digitized by Google

15650

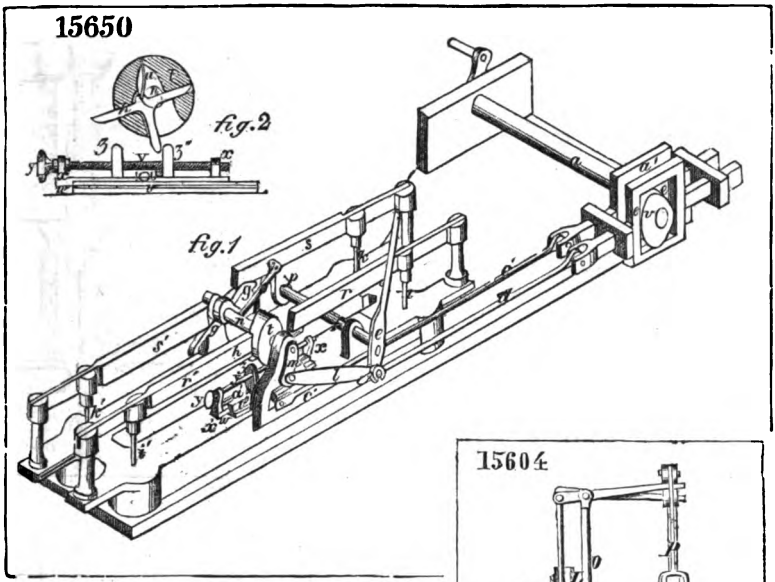

15604

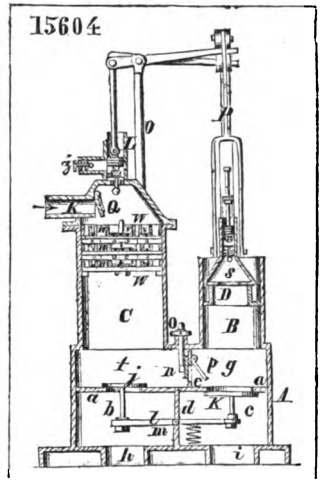

16133

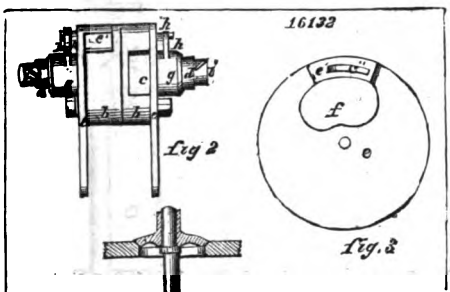

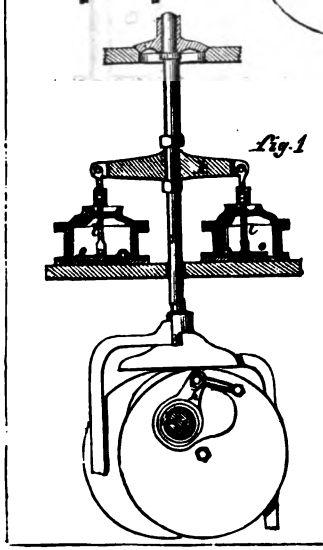

15663

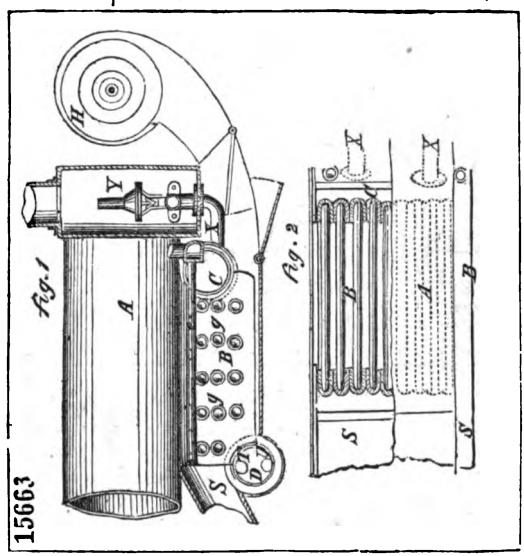

Digitized by Google

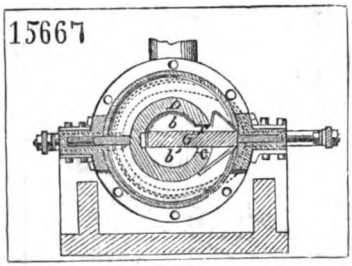

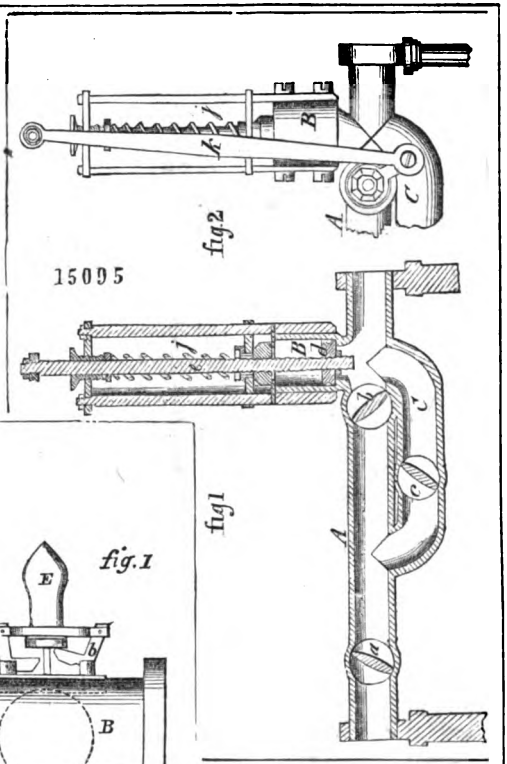

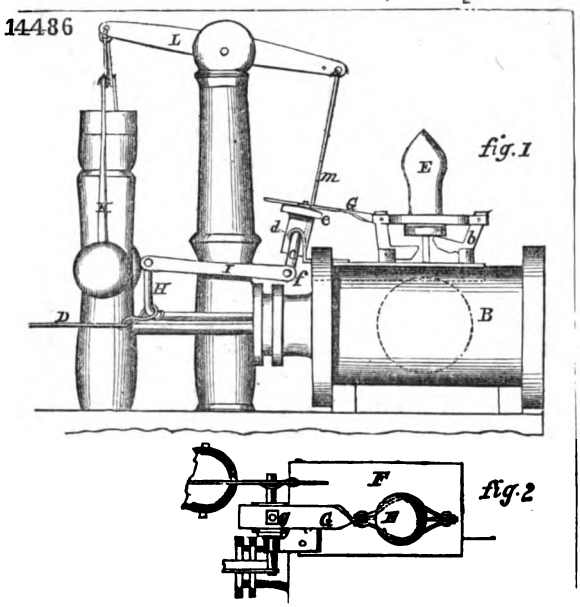

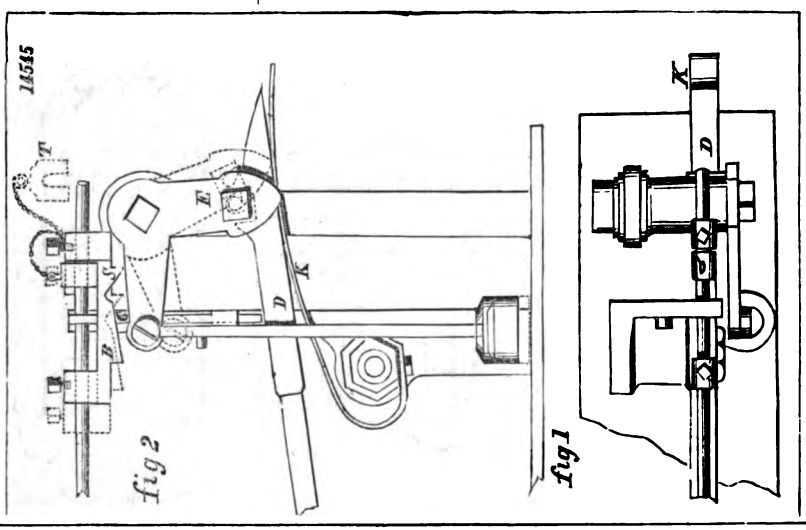

Digitized by Google

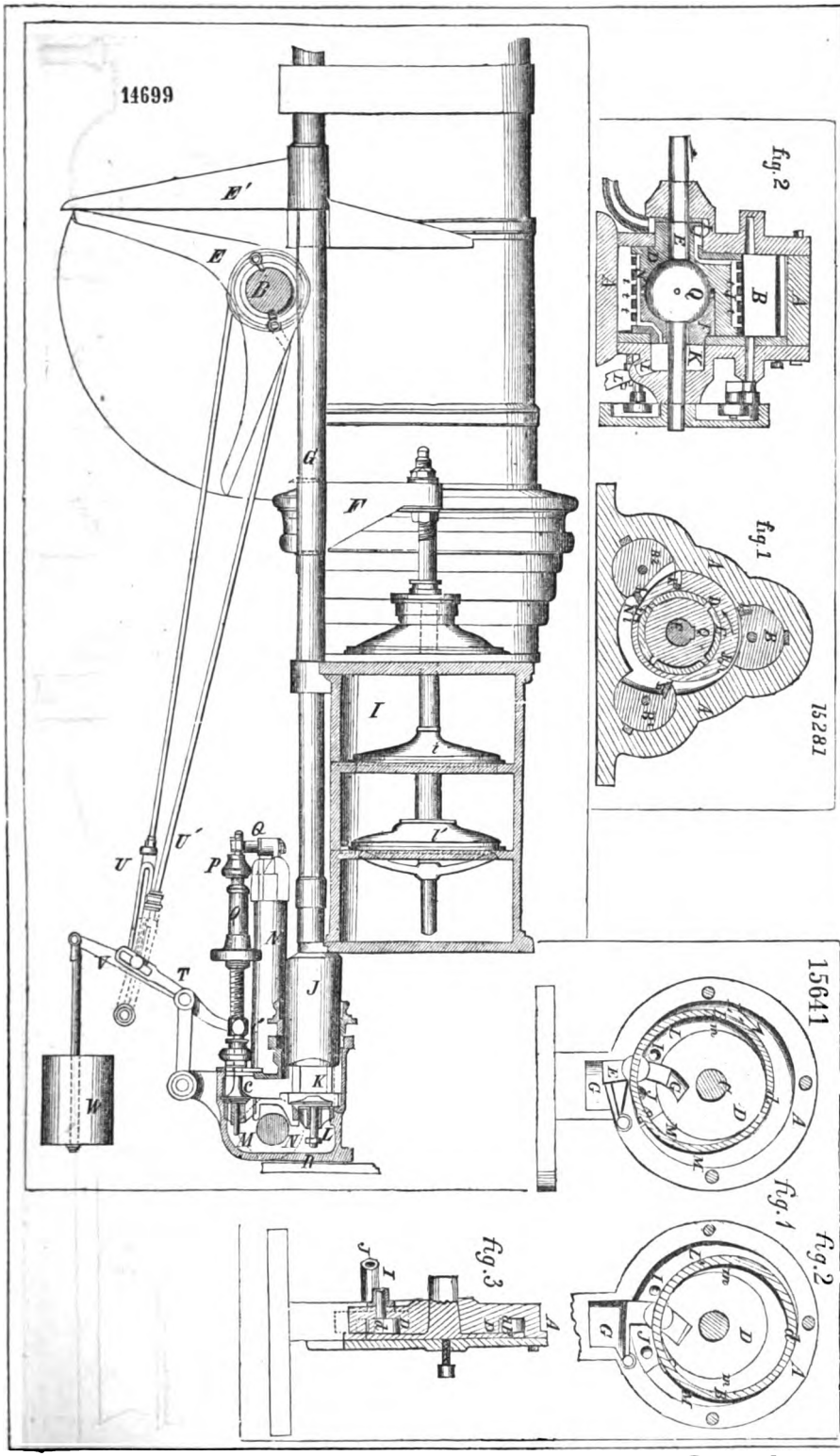

Digitized by Google

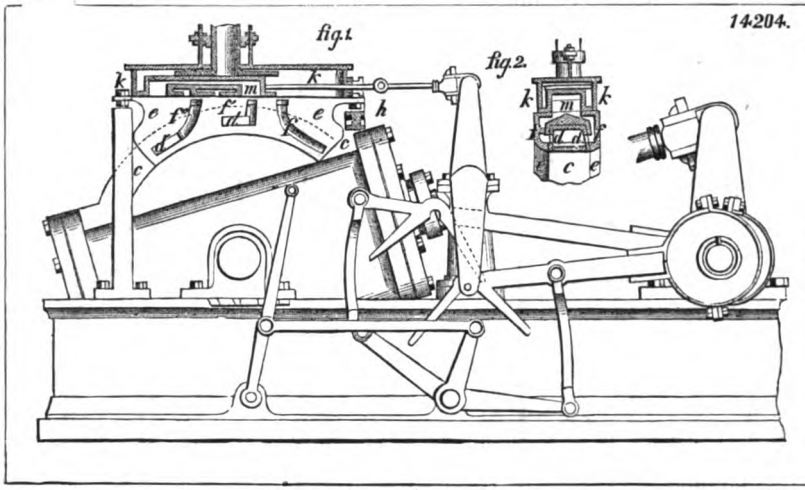

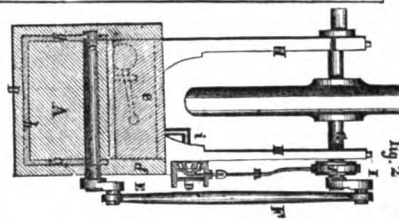

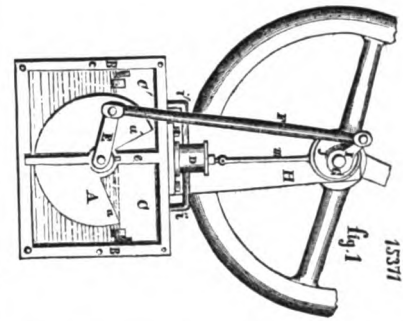

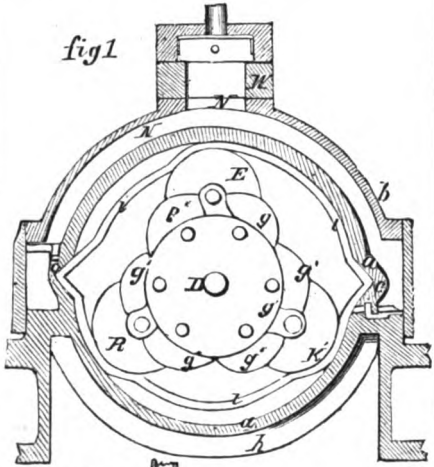

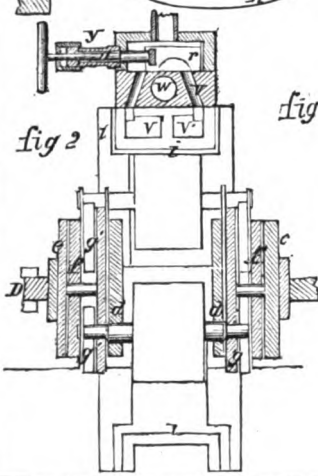

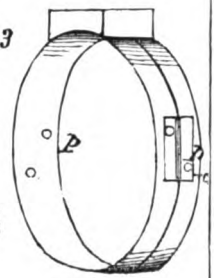

Digitized by Google

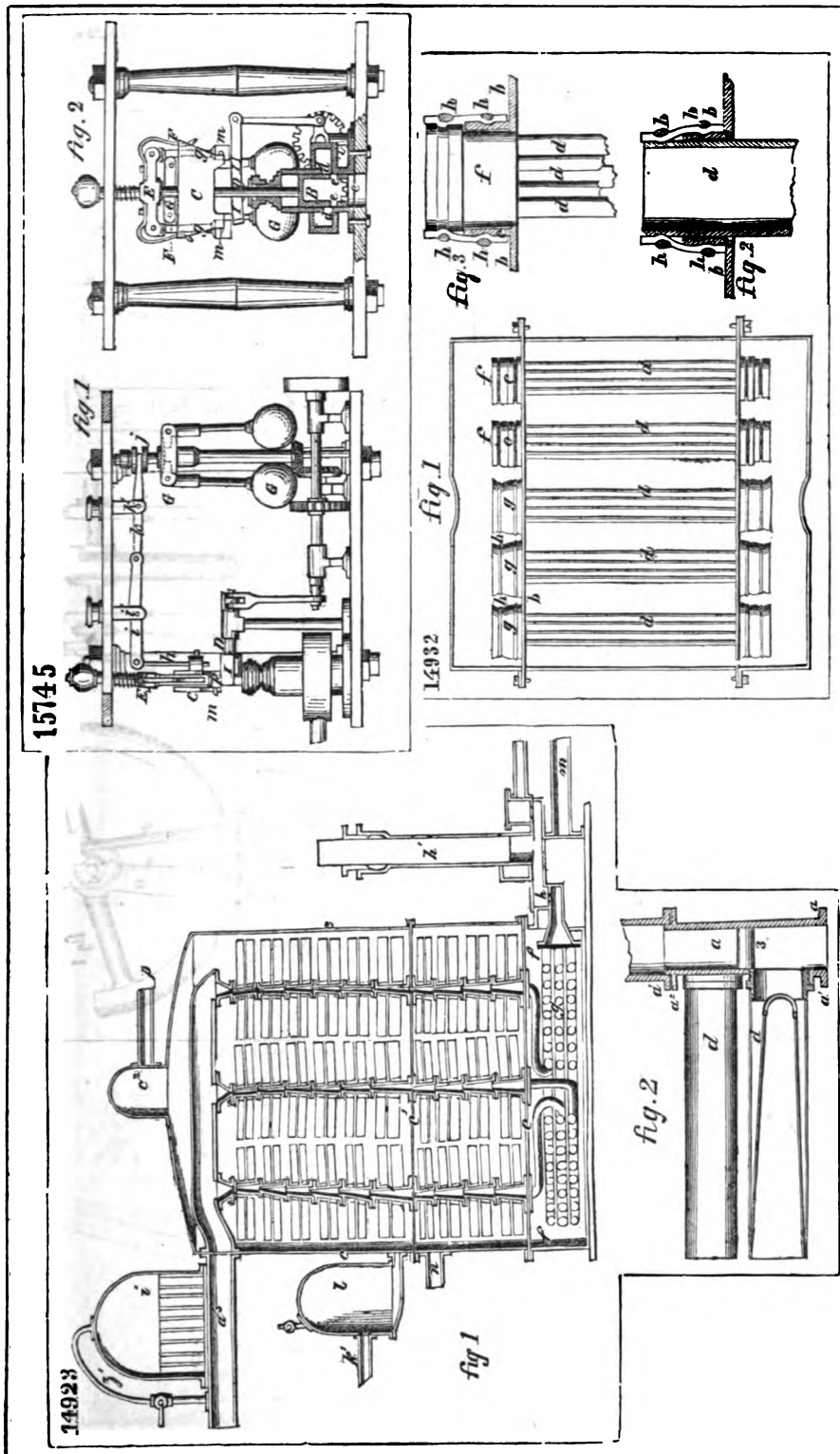

Digitized by Google

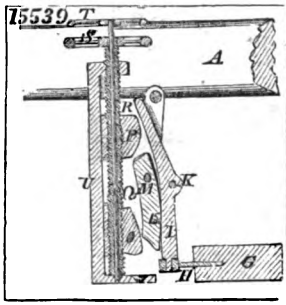

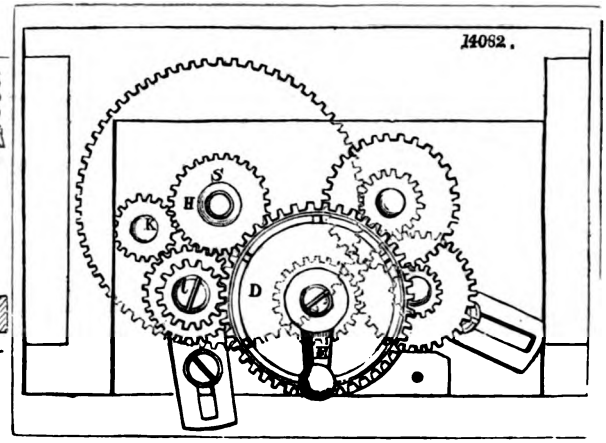

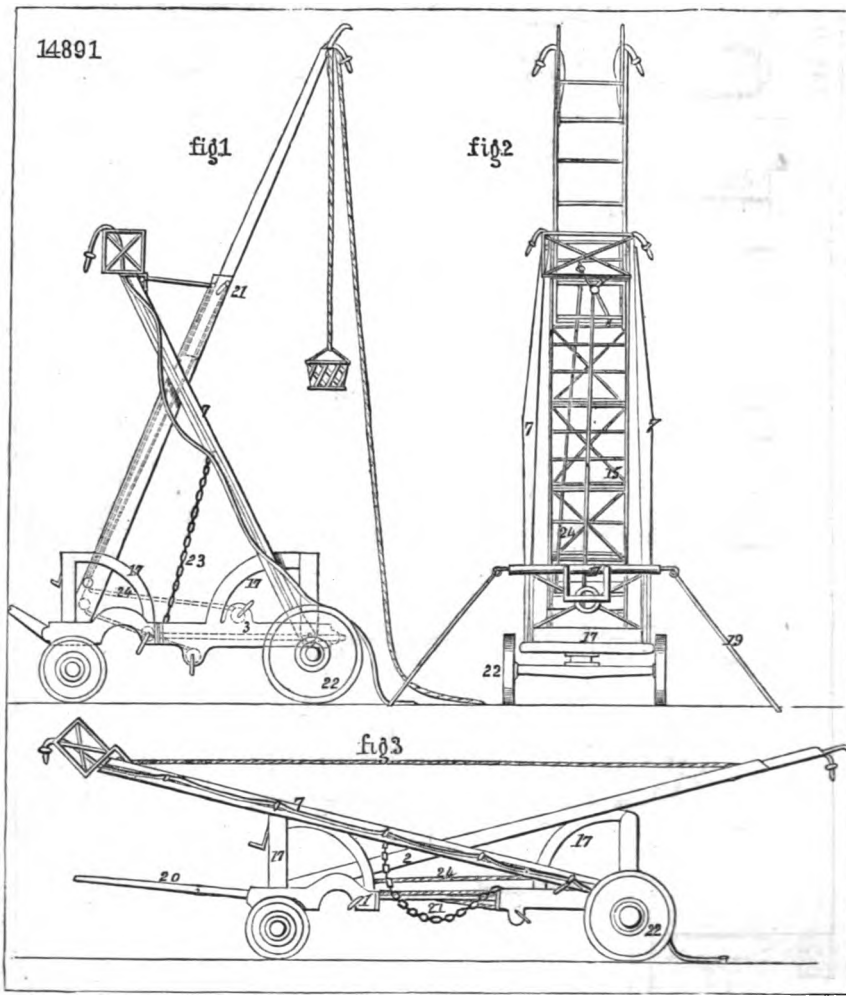

Digitized by Google

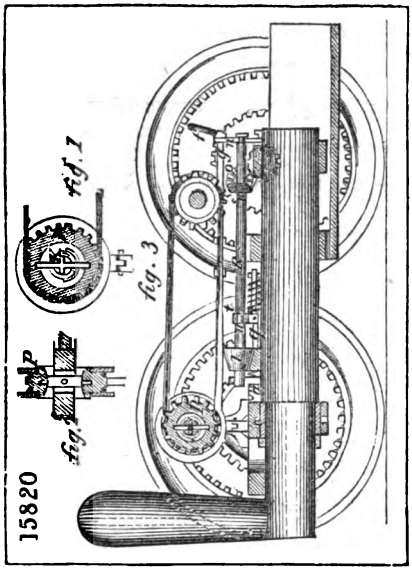

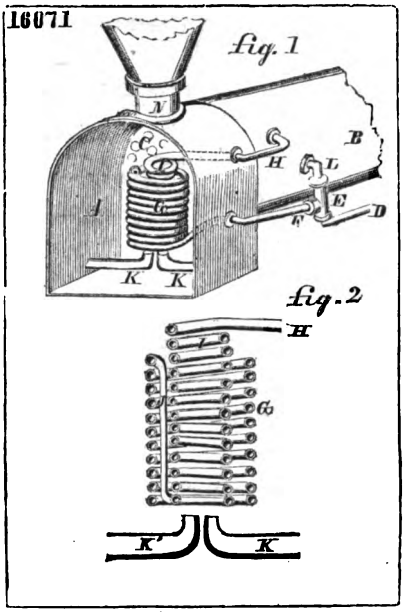

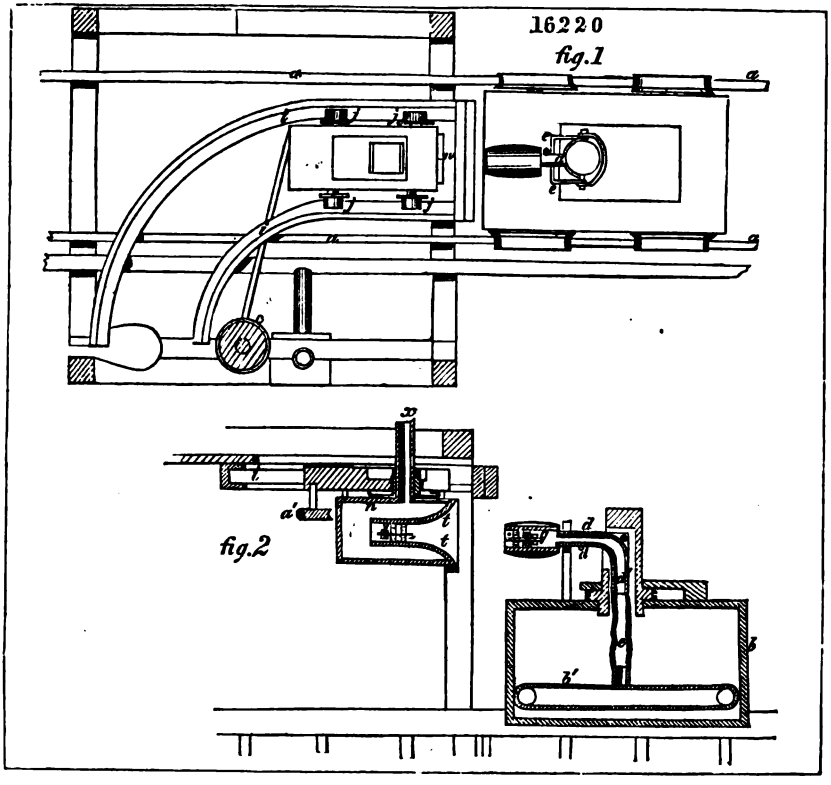

Digitized by Google

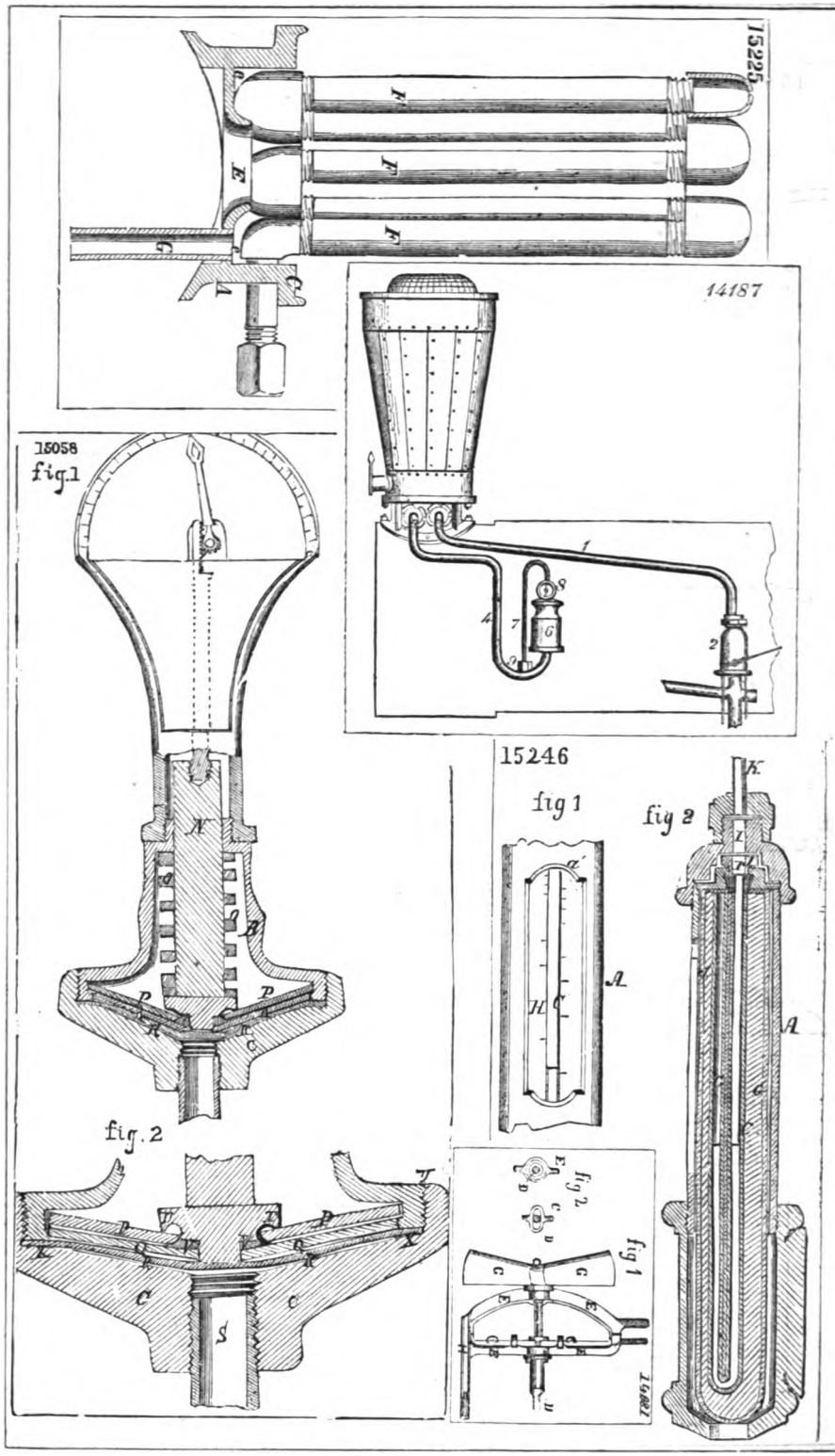

Digitized by Google

15815

fig. 1

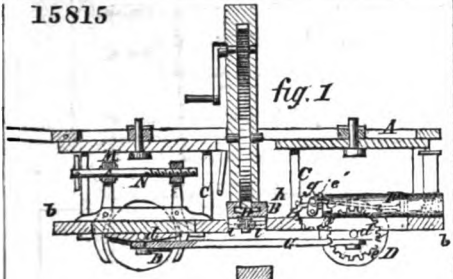

fig. 2

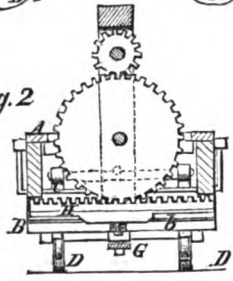

fig. 3

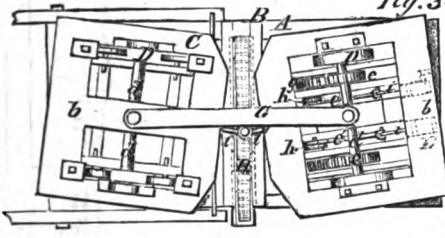

14944

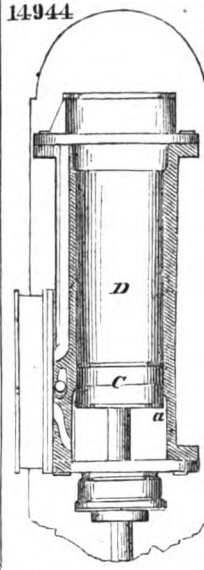

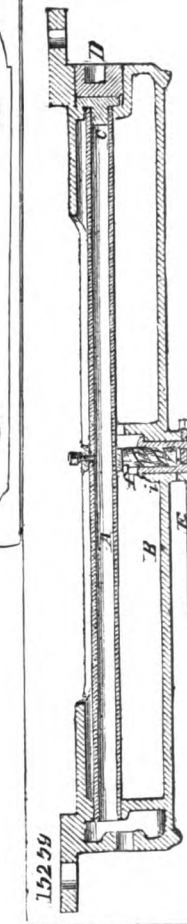

15259

15229

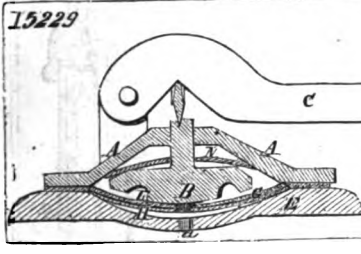

14500

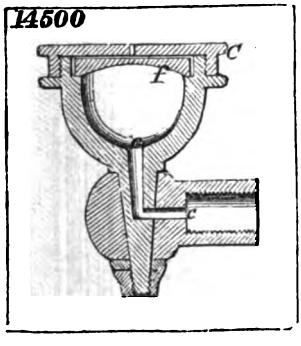

14562

fig. 1.

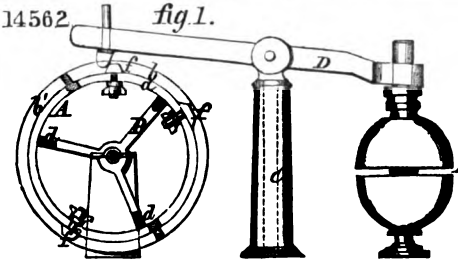

fig 2.

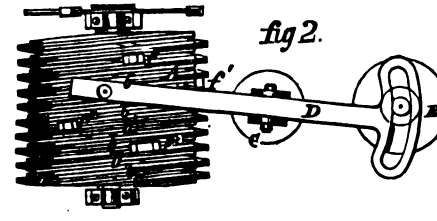

Digitized by Google

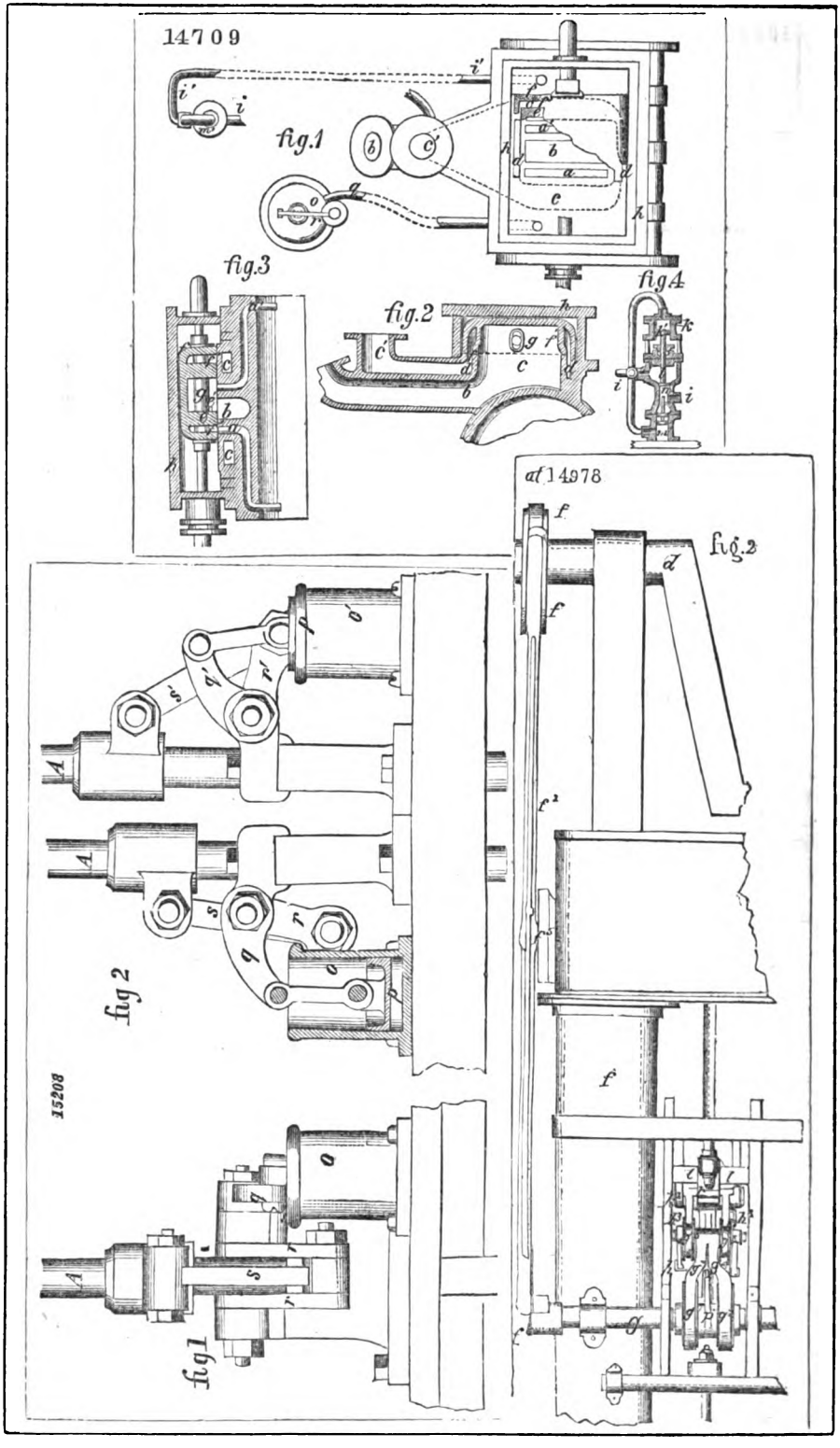

Digitized by Google

16227

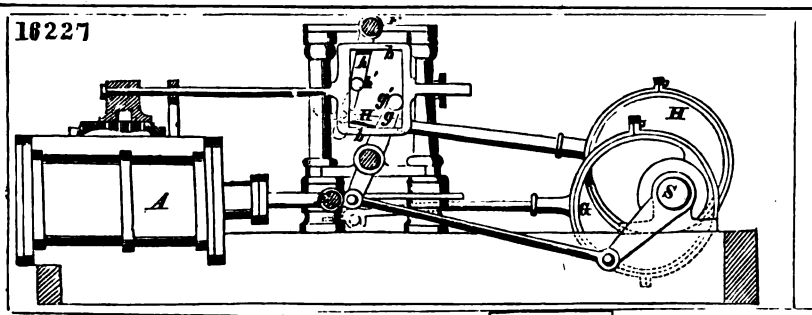

14978

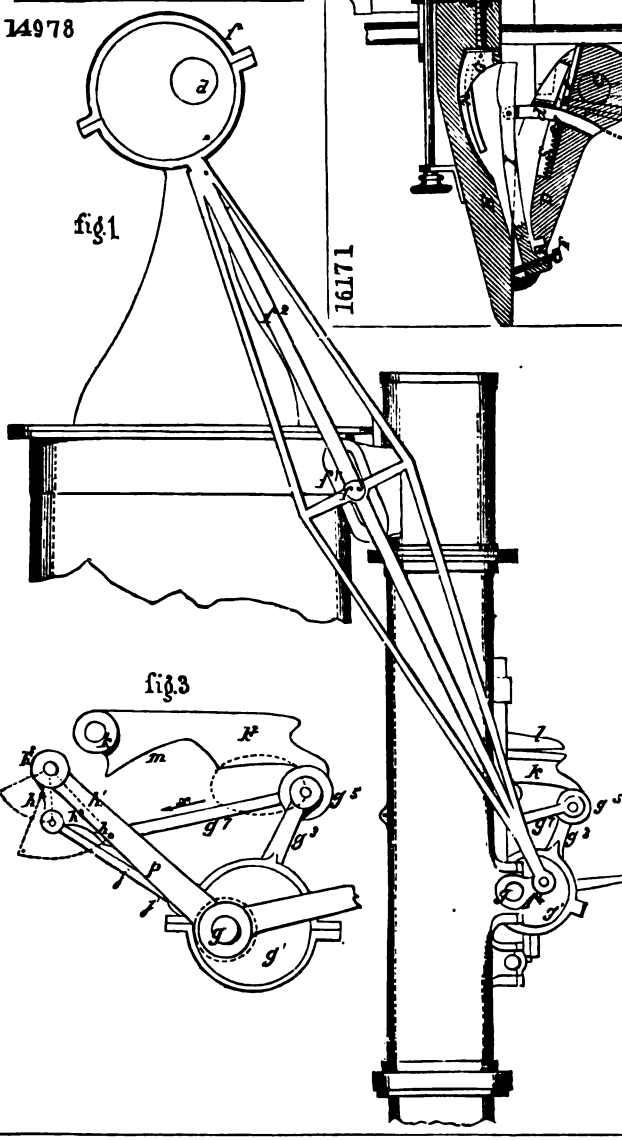

16171

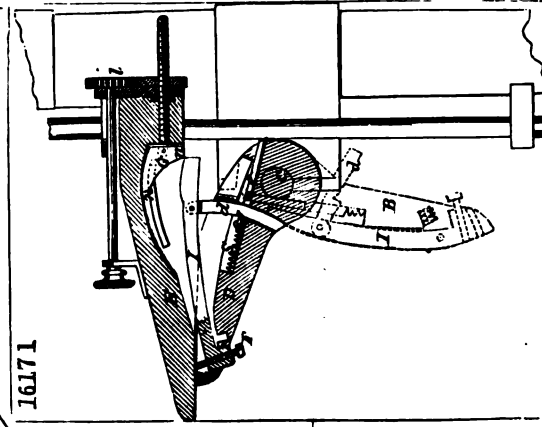

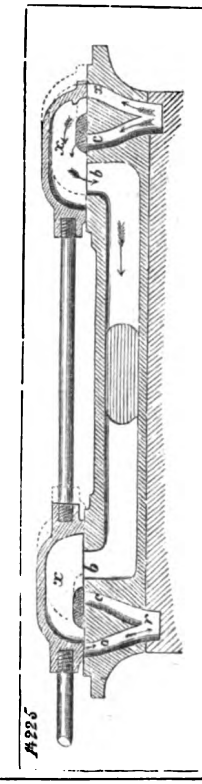

Digitized by Google

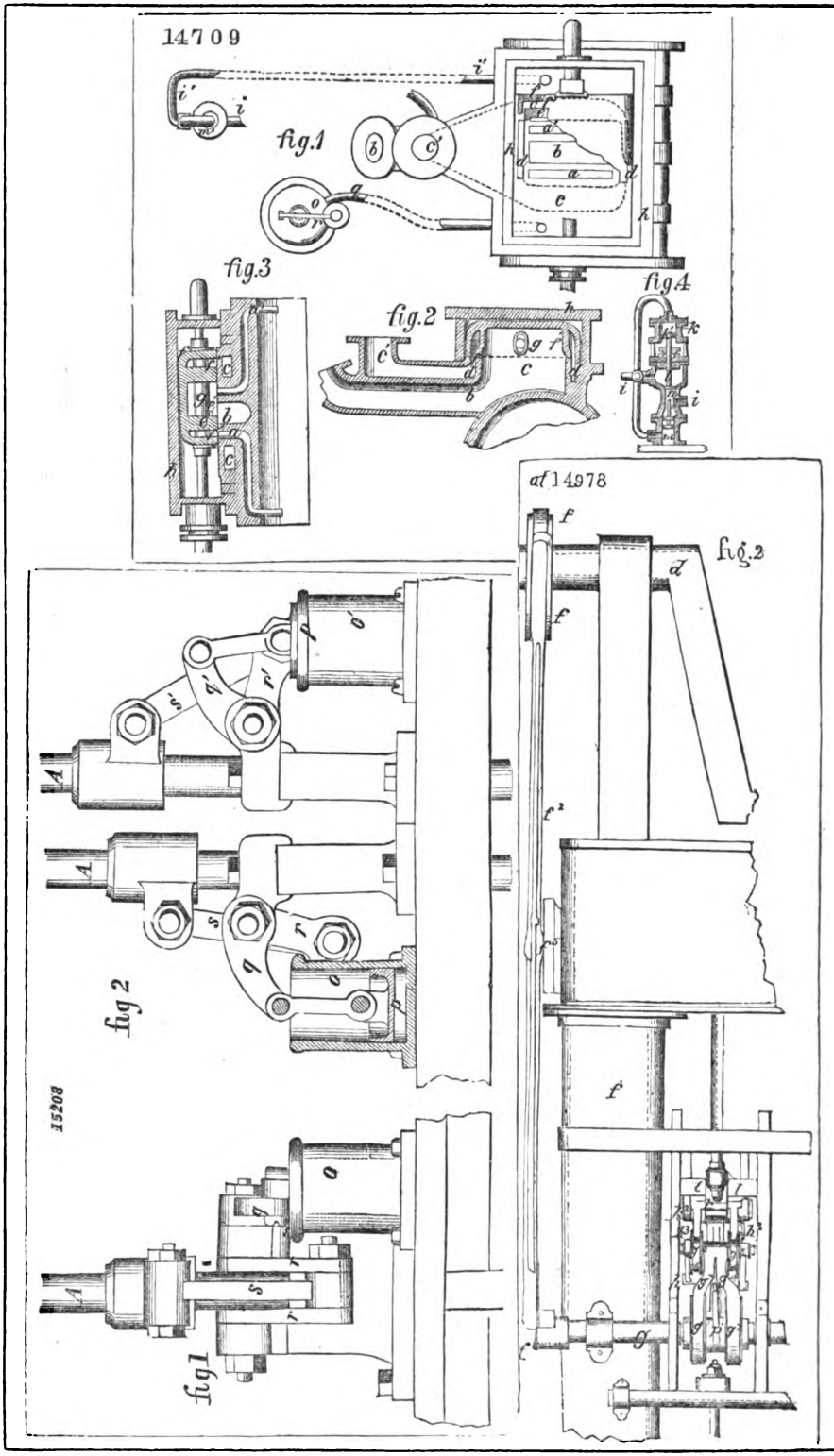

Digitized by Google

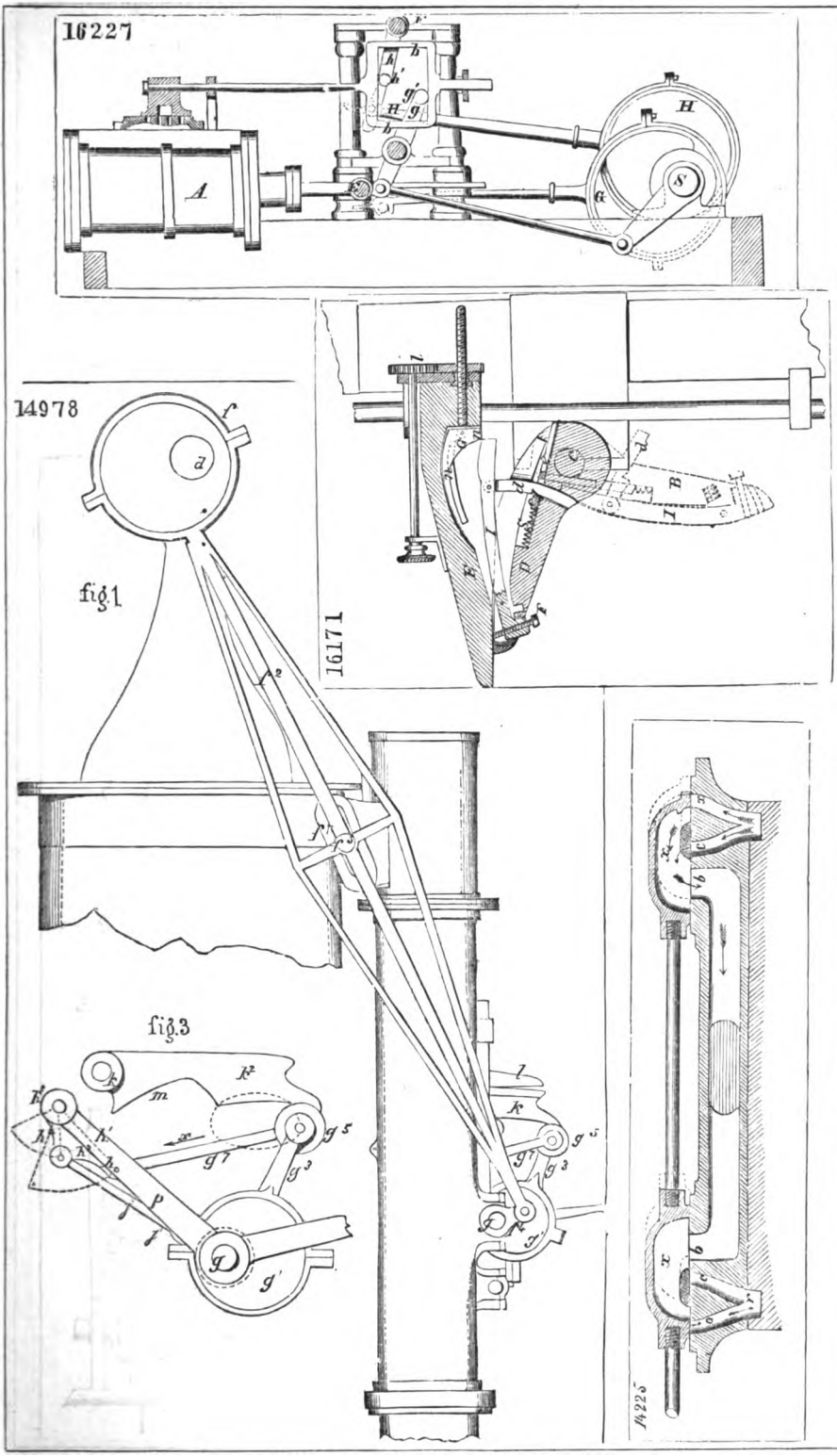

Digitized by Google

14580

fig. 1

fig. 2

15400

14620

fig. 1

fig. 2

15576

fig 1

fig 2

fig 3

15207

fig.1 fig.2

14516

fig.1

fig.2

14749

14999

Digitized by Google

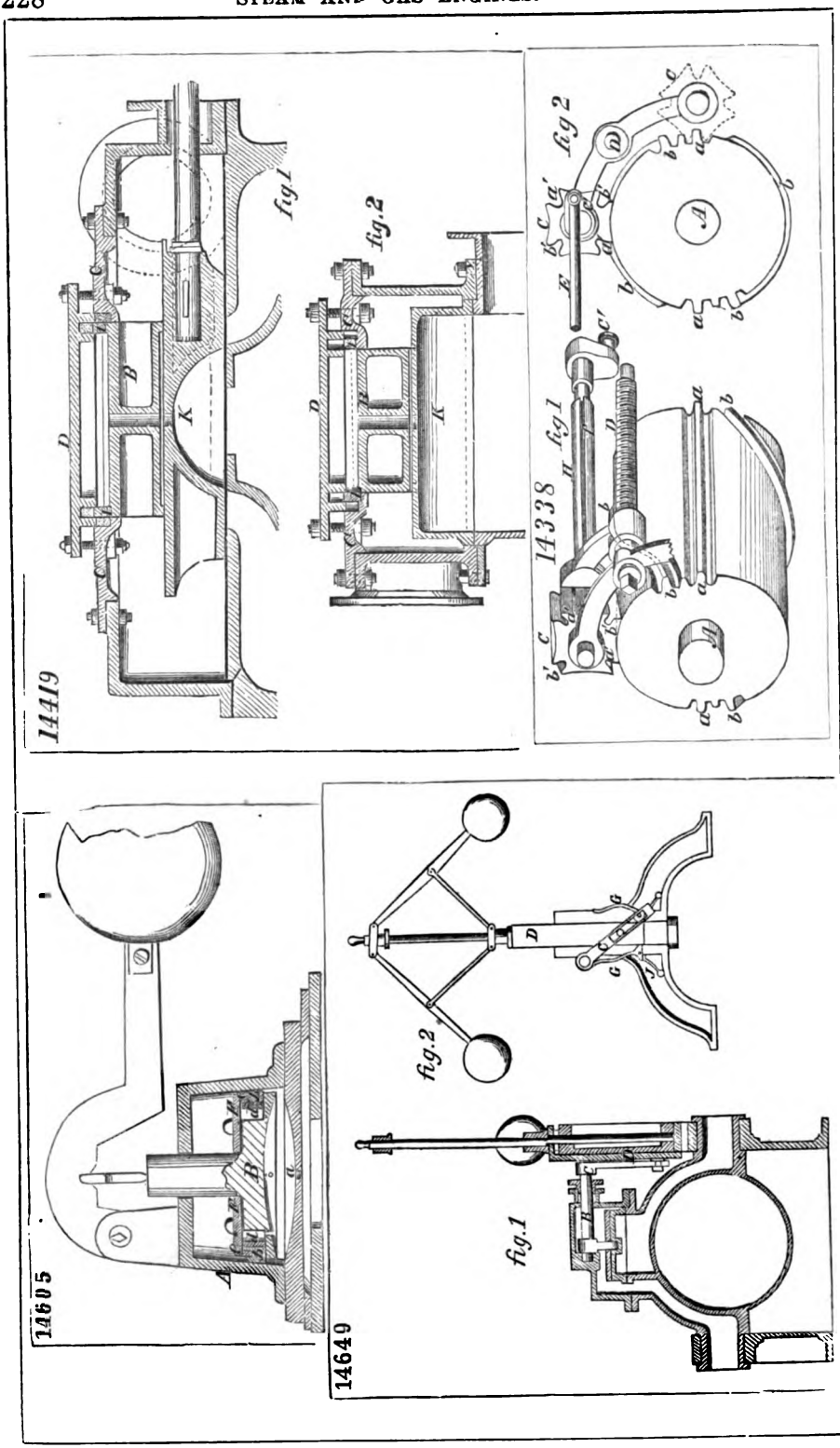

Digitized by Google

15025

fig 1

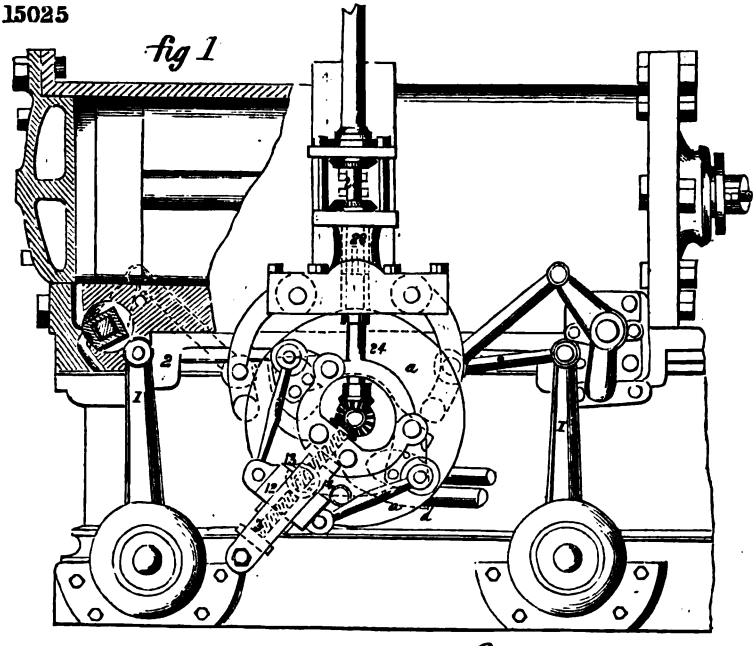

fig 3

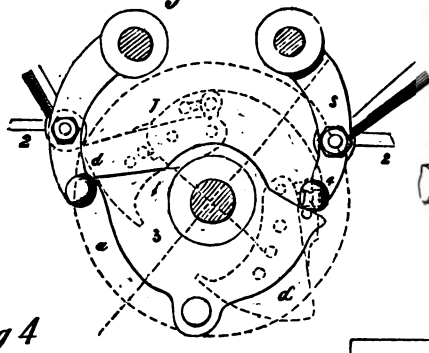

fig 5

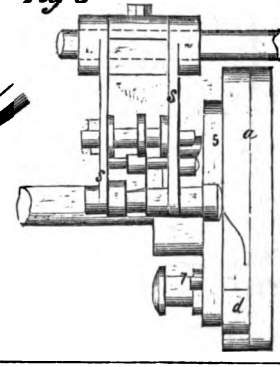

fig 4

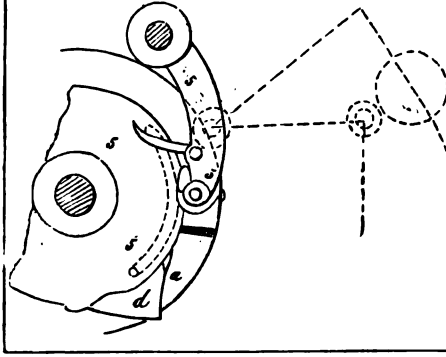

14108.

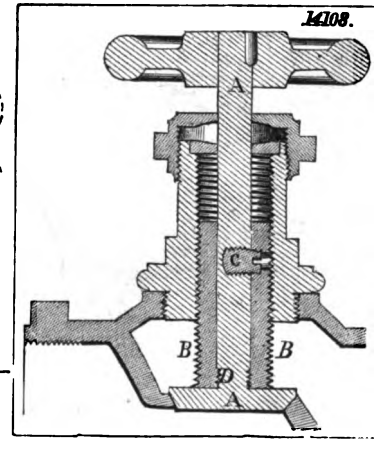

Digitized by Google

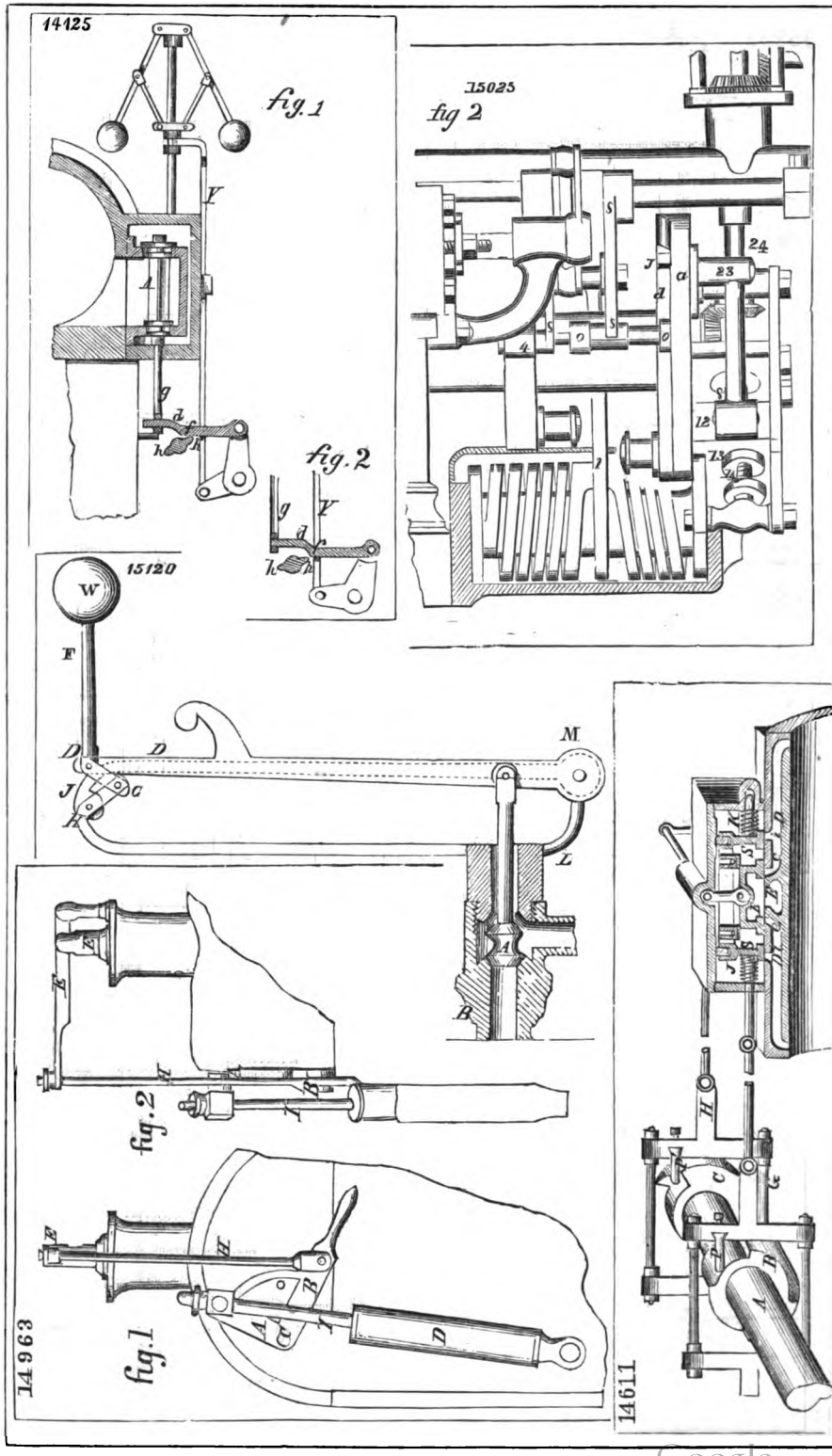

Digitized by Google

15834

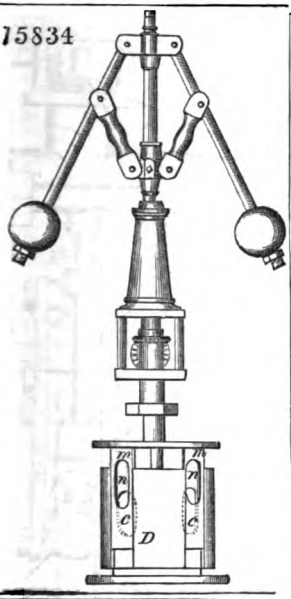

14906

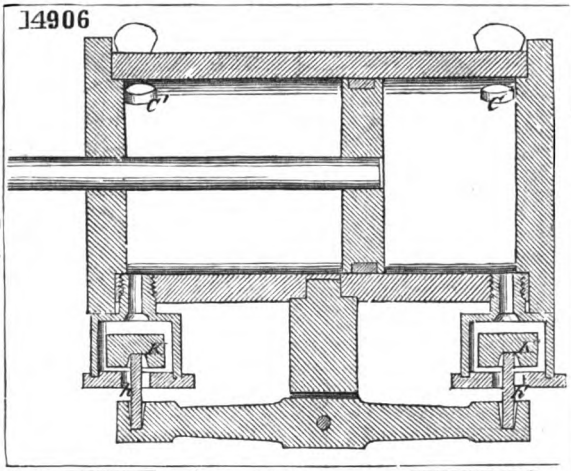

14145

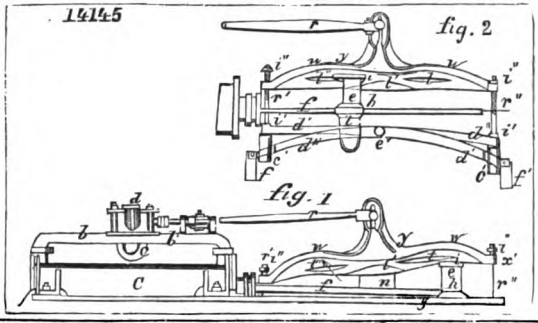

14010.

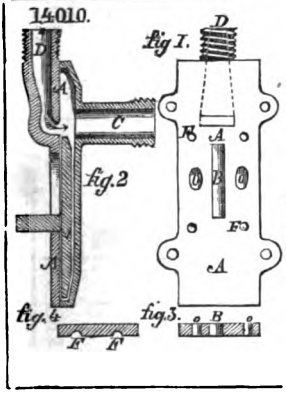

14150

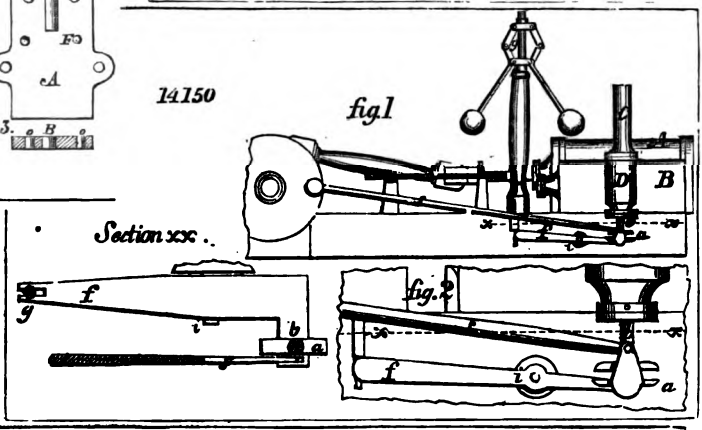

14991

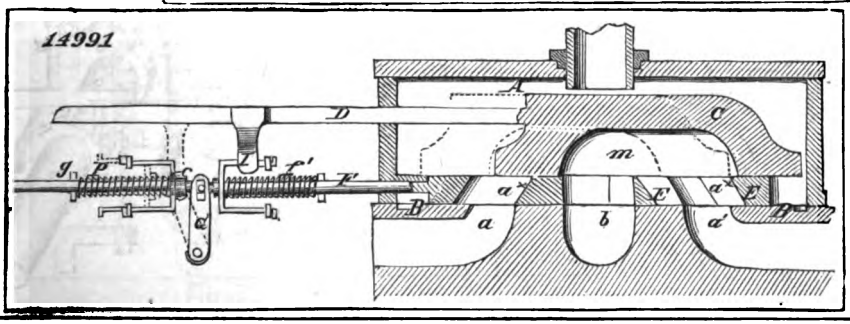

Digitized by Google

15187

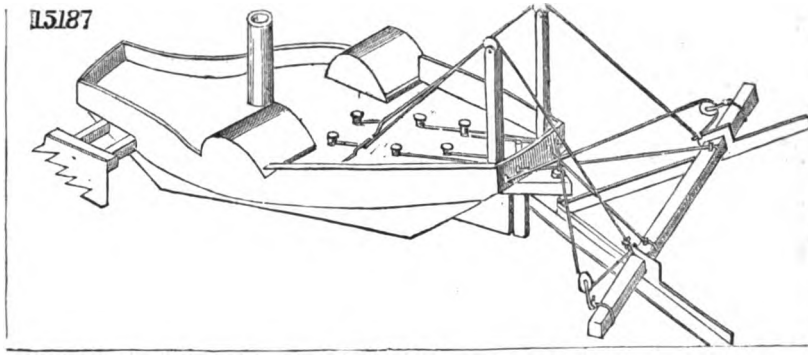

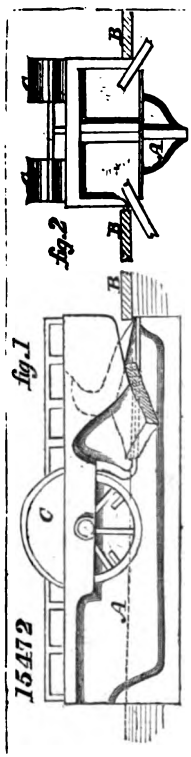

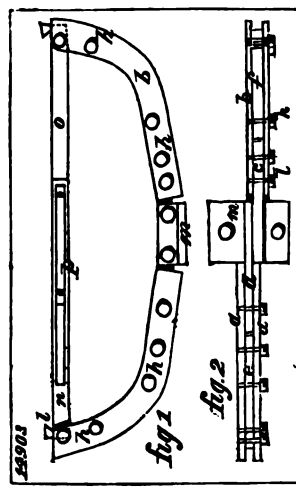

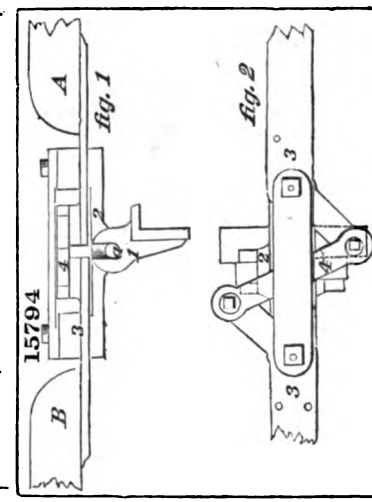

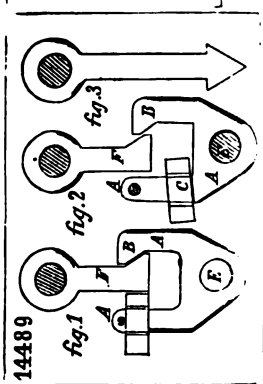

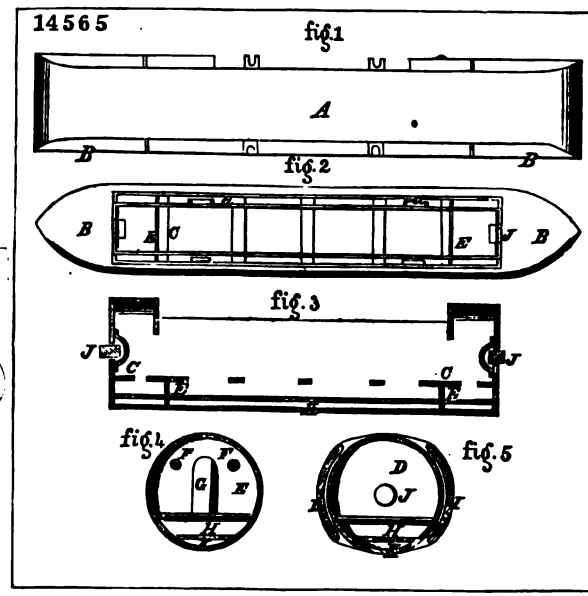

Digitized by Google

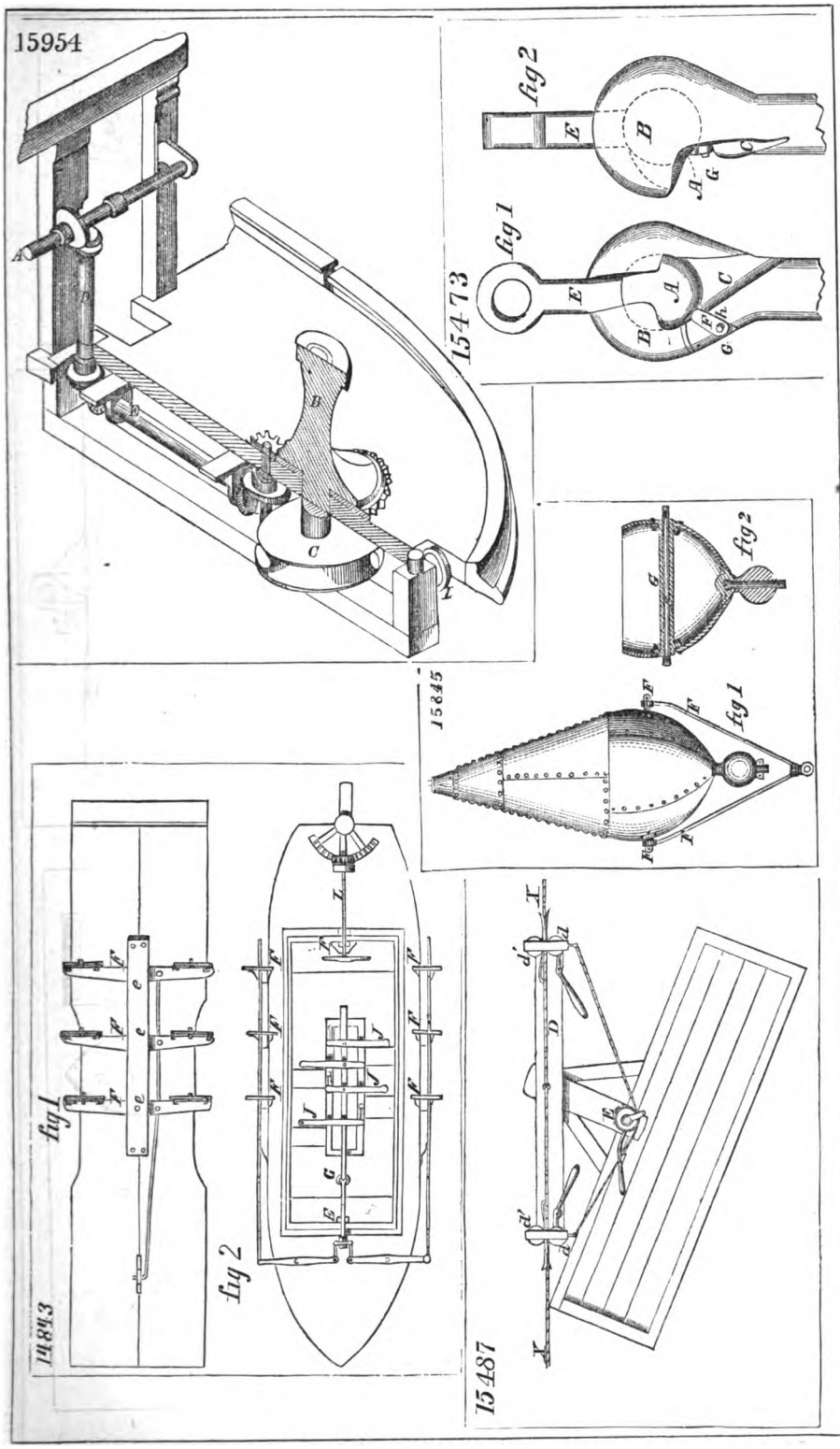

Digitized by Google

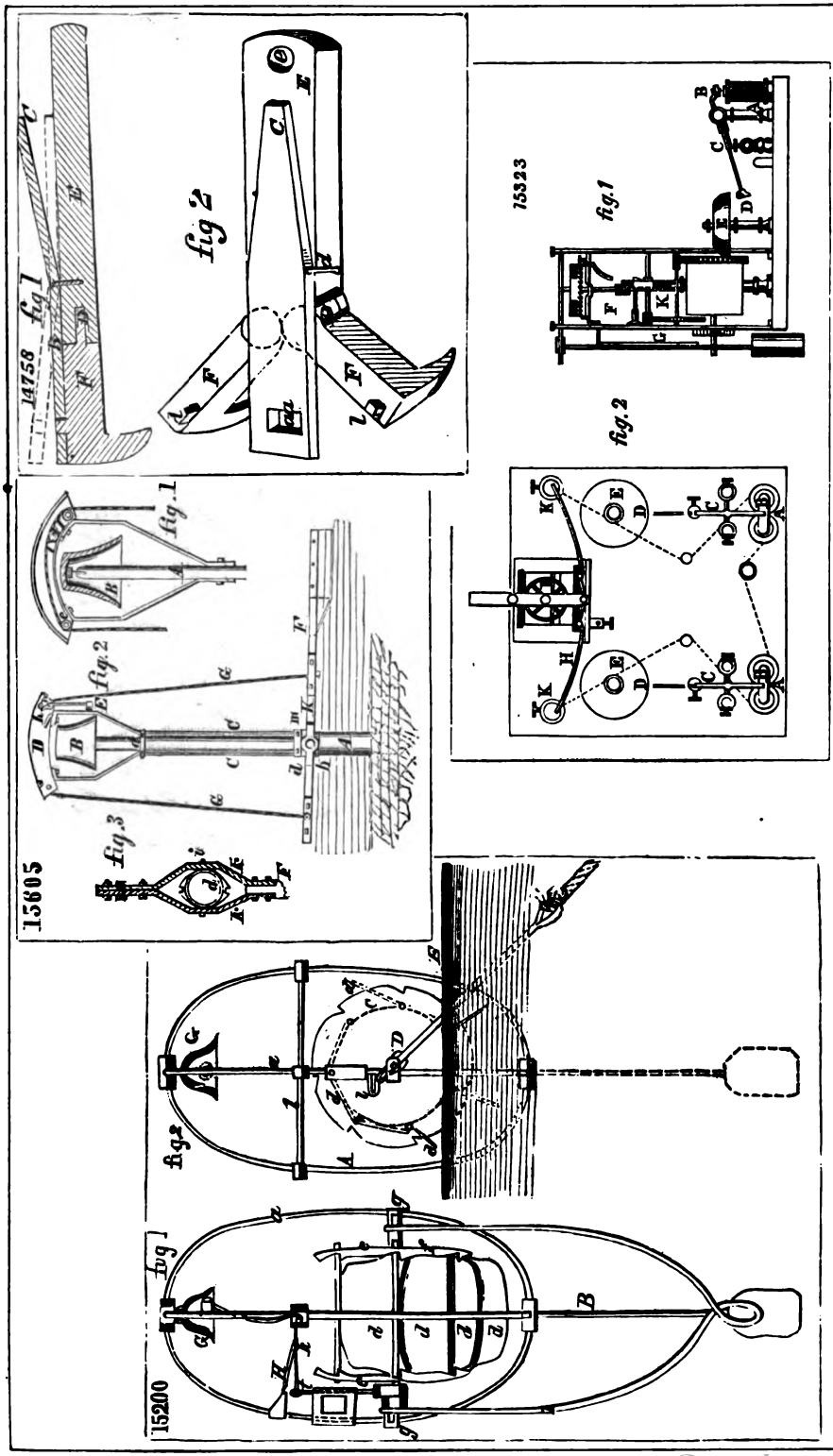

Digitized by Google

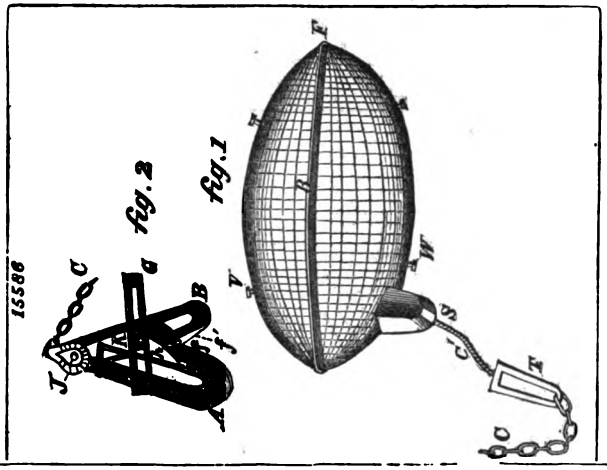

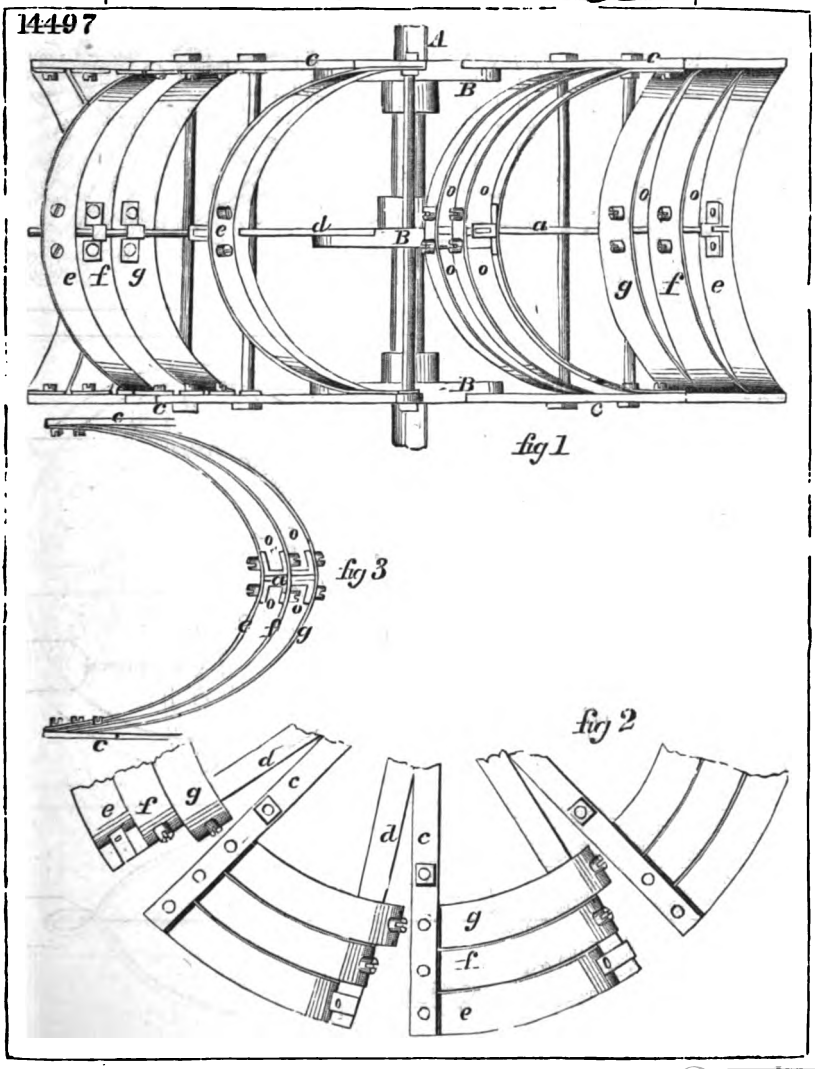

Digitized by Google

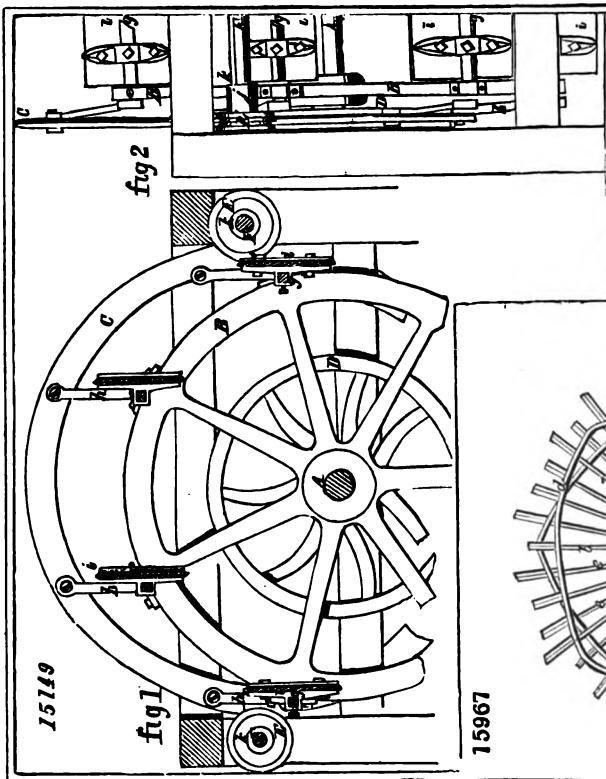

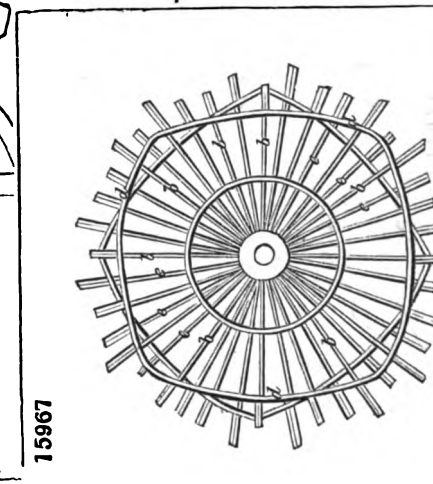

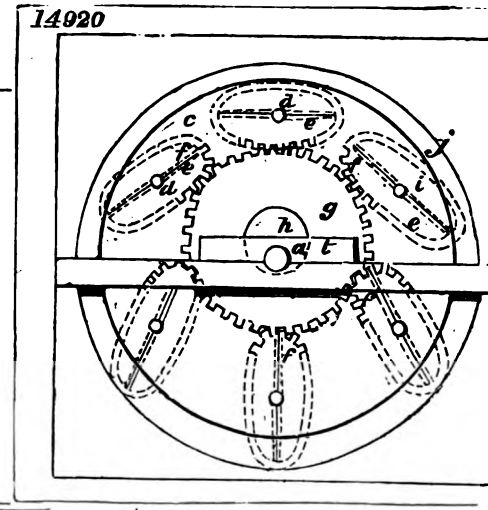

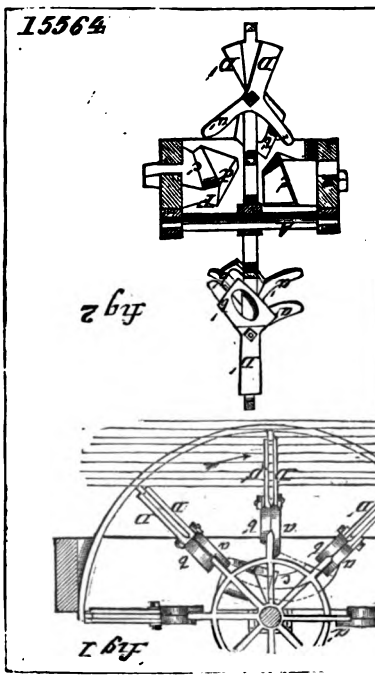

Digitized by Google

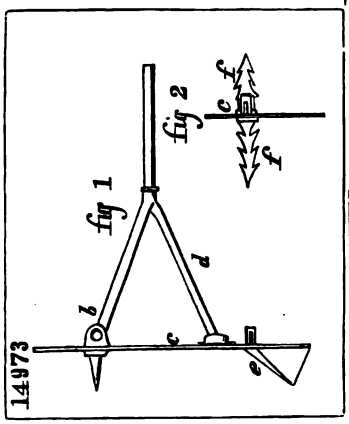

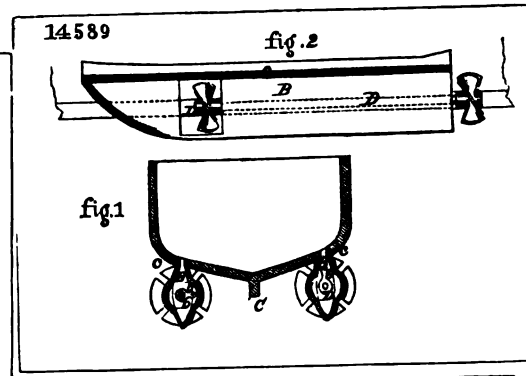

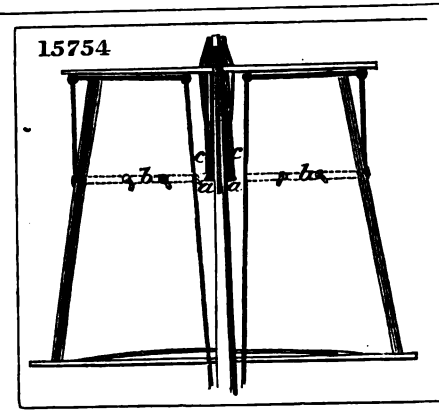

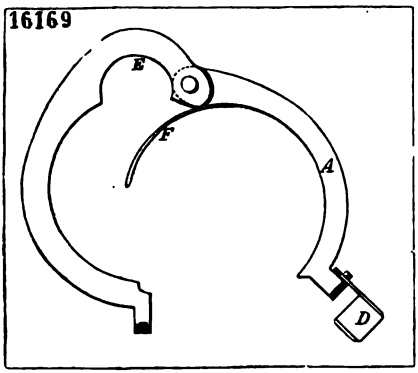

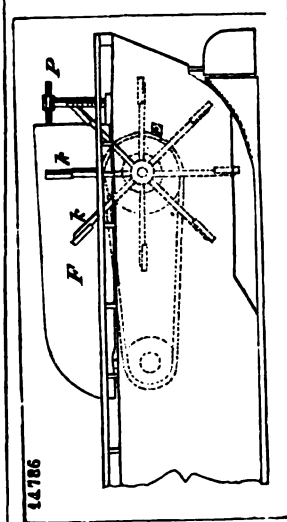

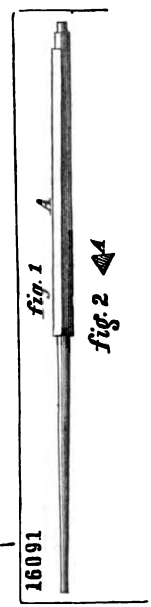

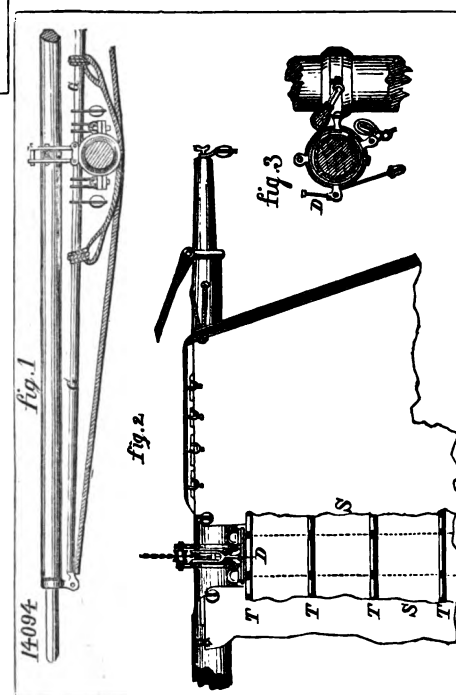

Digitized by Google

14365

fig. 2

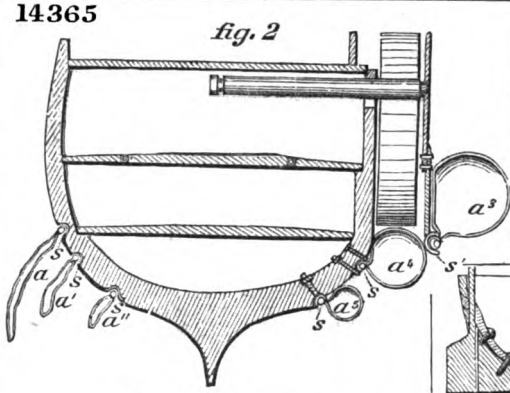

15837

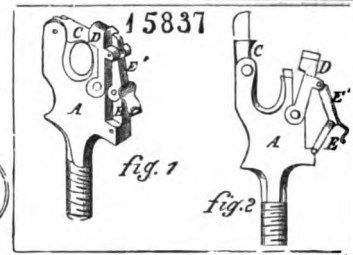

fig. 1 fig. 2

14048

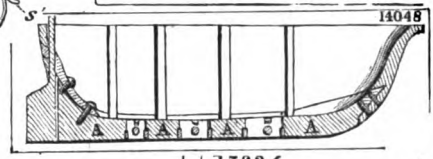

fig. 1

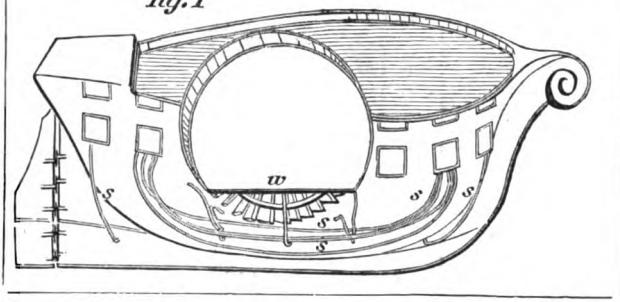

15624

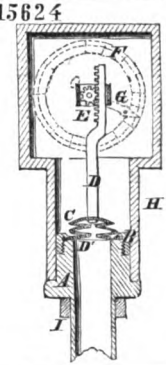

14113

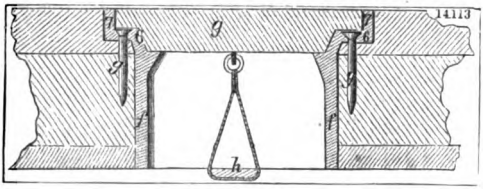

15090

fig. 1.

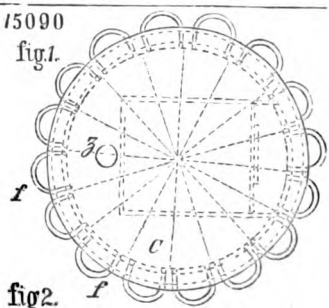

fig 2.

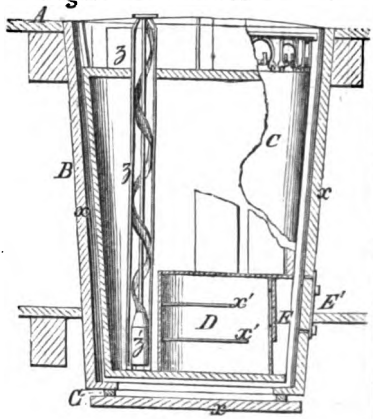

fig 2

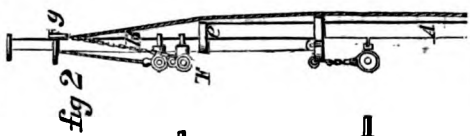

fig 1

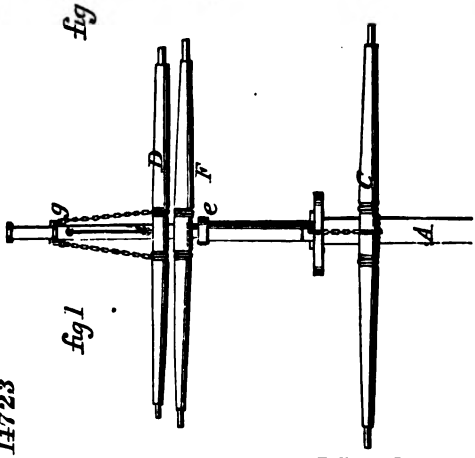

14723

Digitized by Google

14377

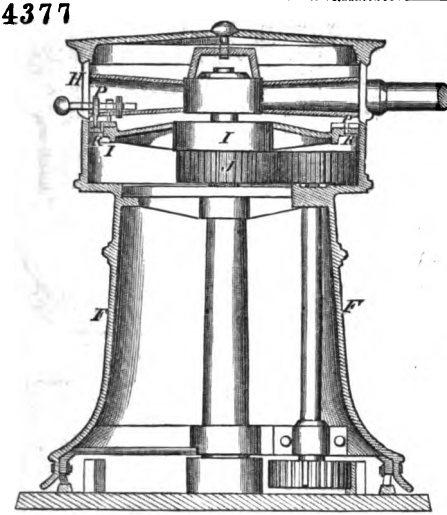

15886

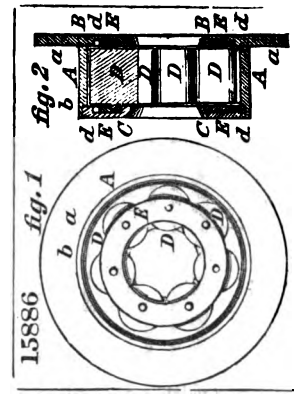

14983

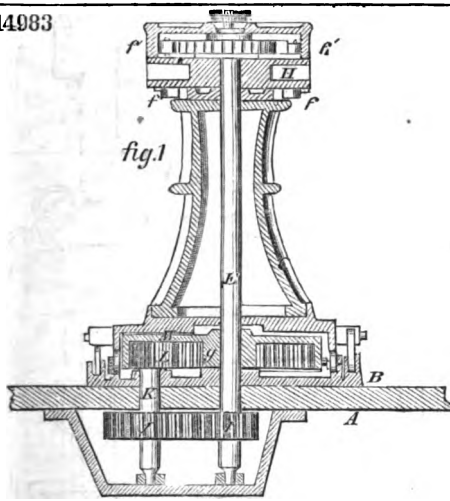

15933

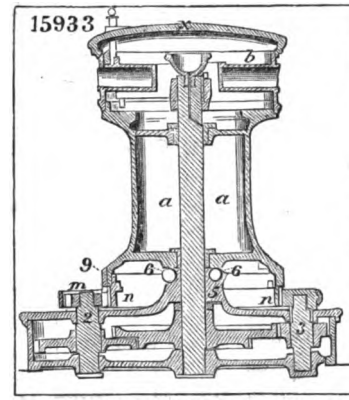

fig. 2

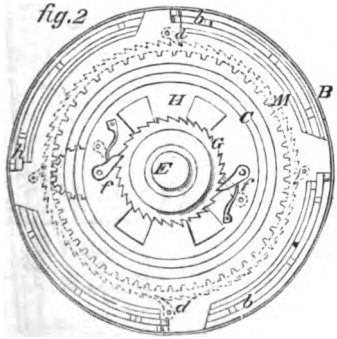

15817

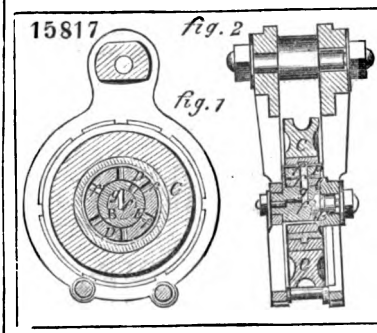

Digitized by Google

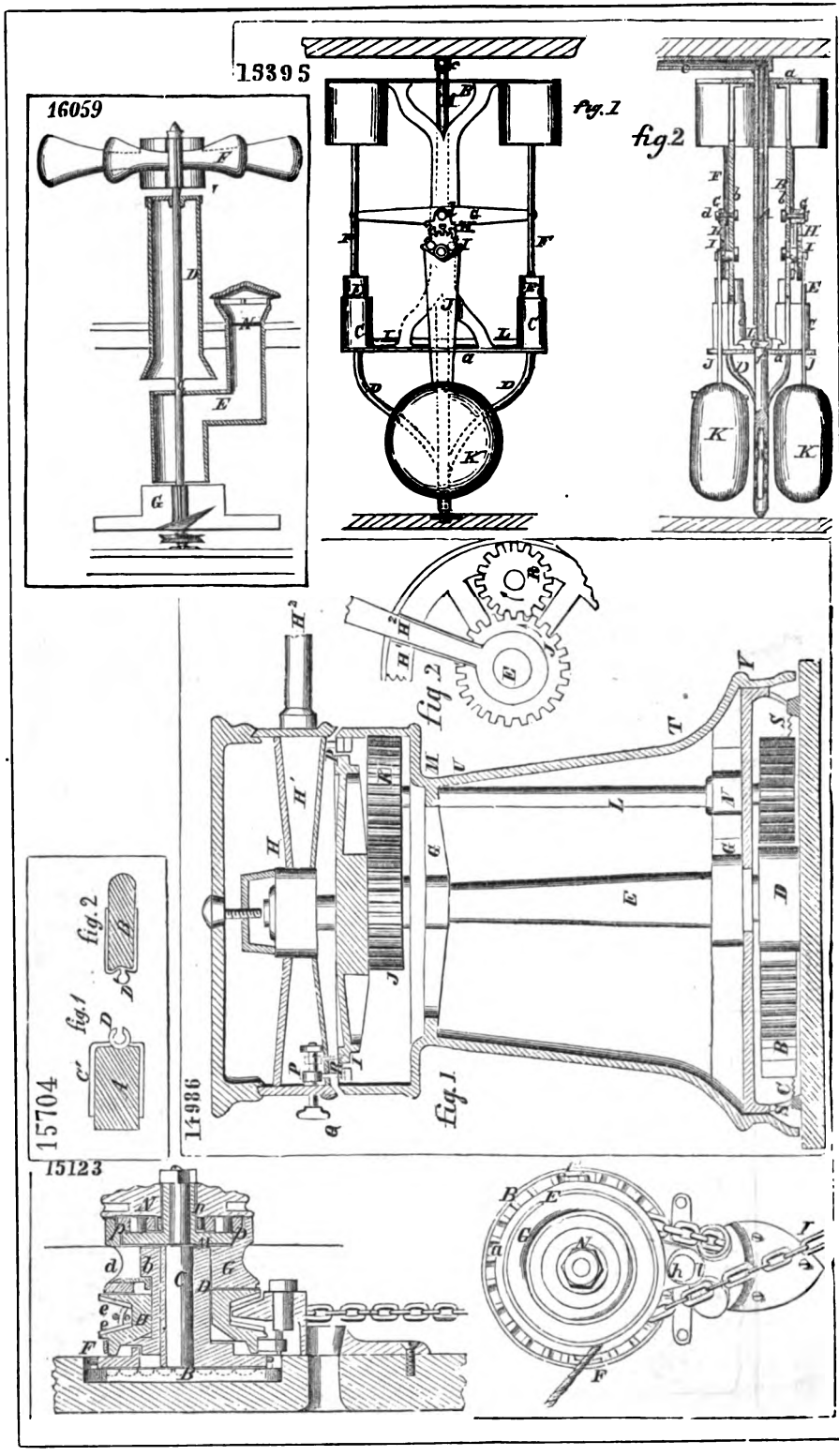

Digitized by Google

15732

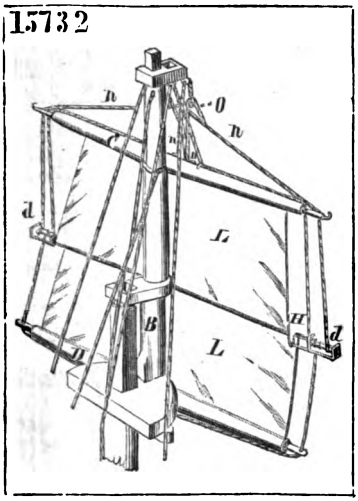

16045

fig.1

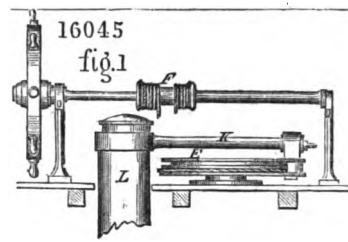

fig.2

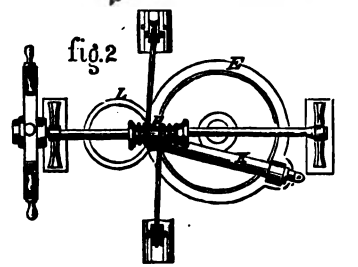

16238

fig1

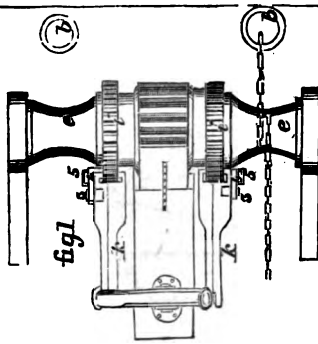

fig2

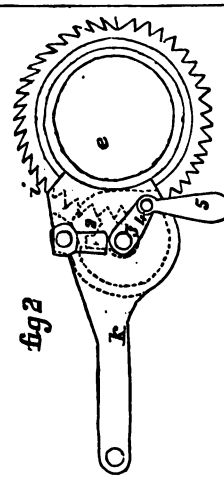

fig3

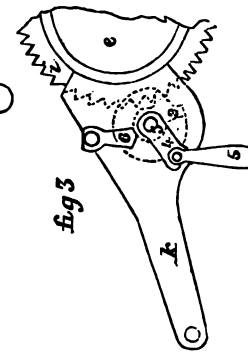

16165

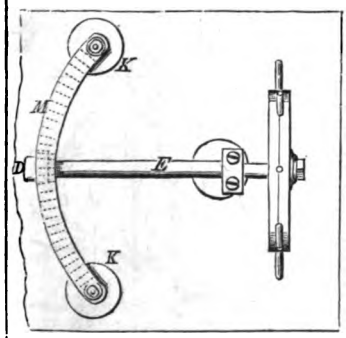

fig1

fig.2

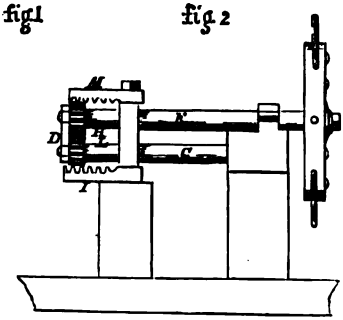

Digitized by Google

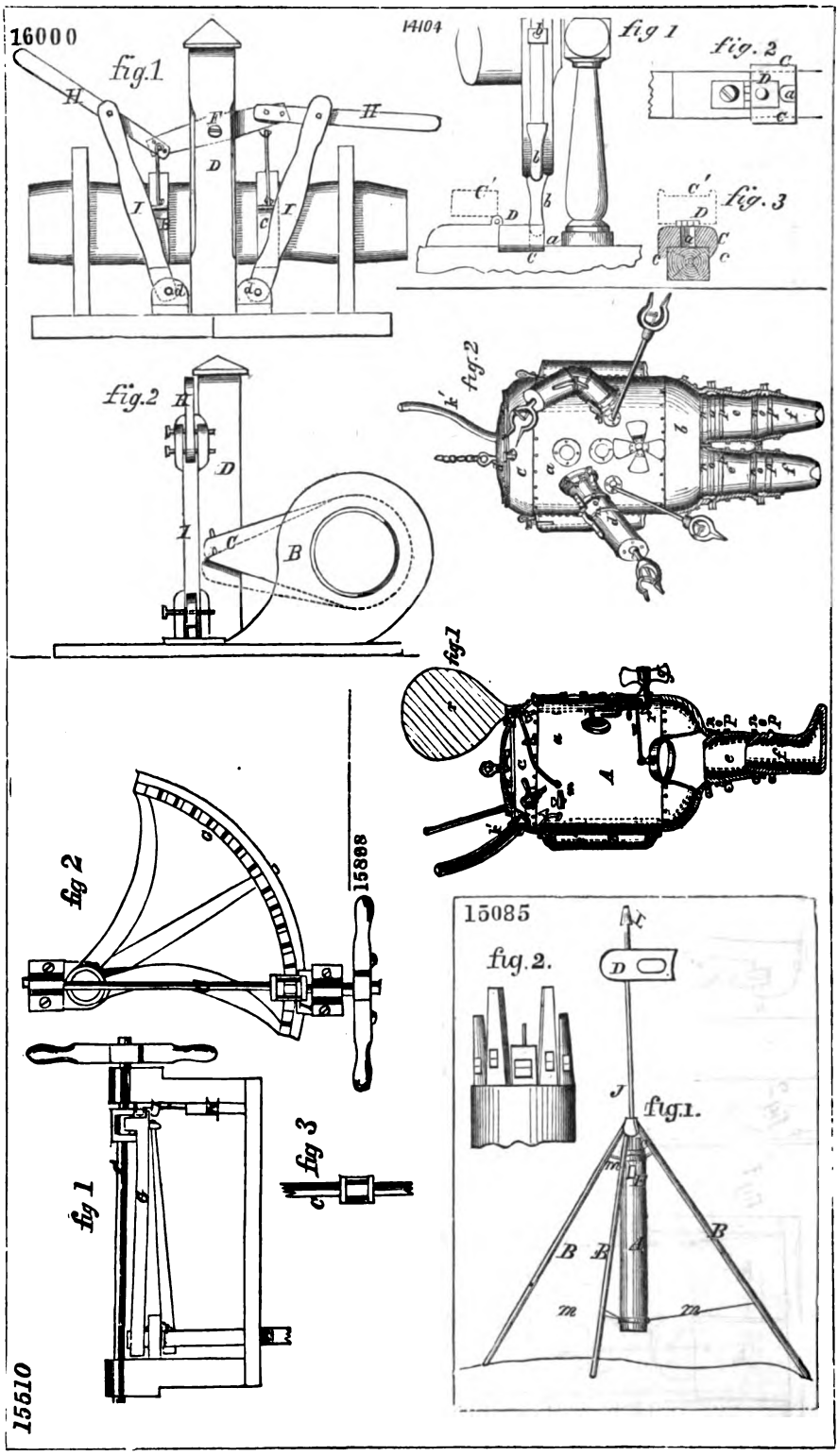

Digitized by Google

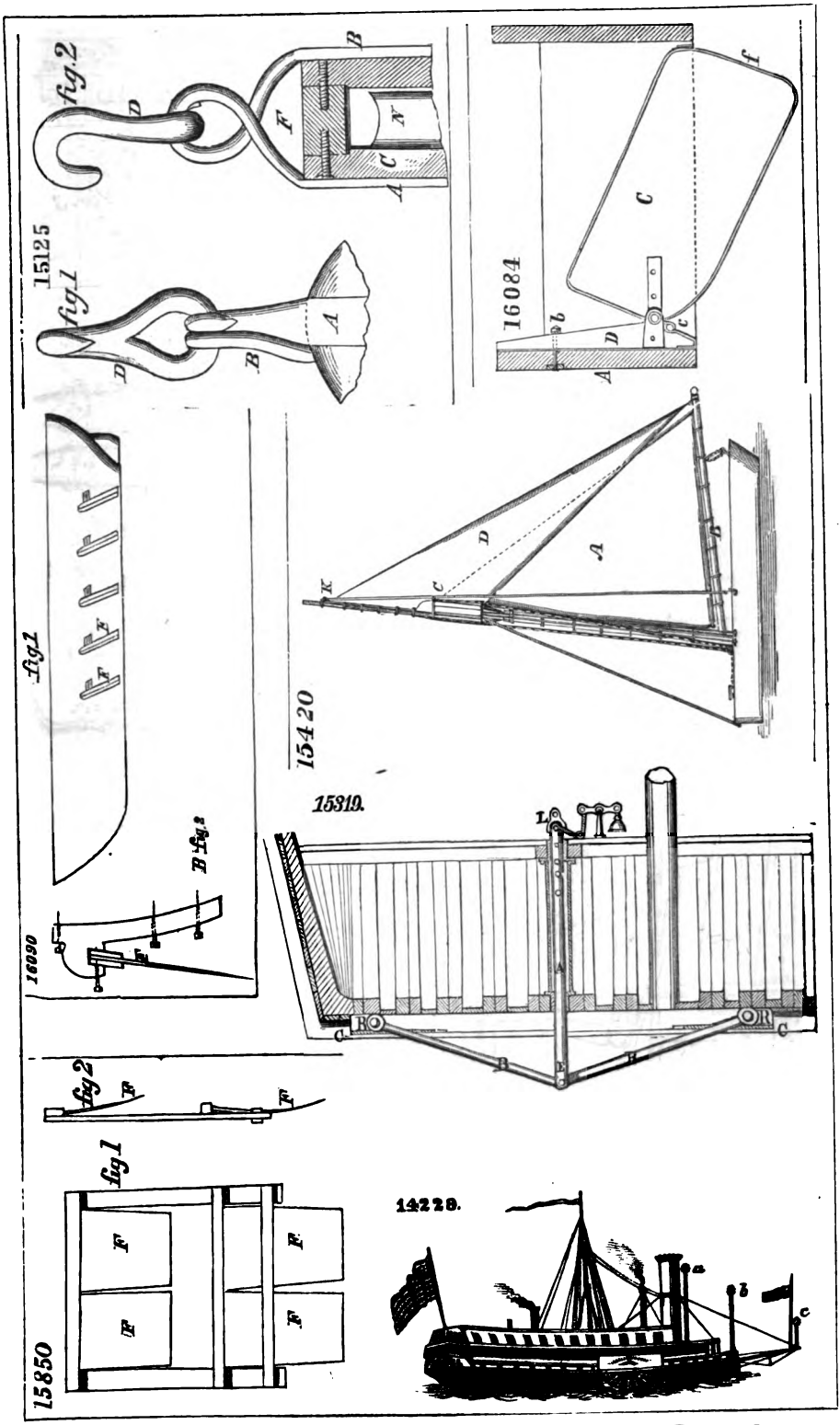

Digitized by Google

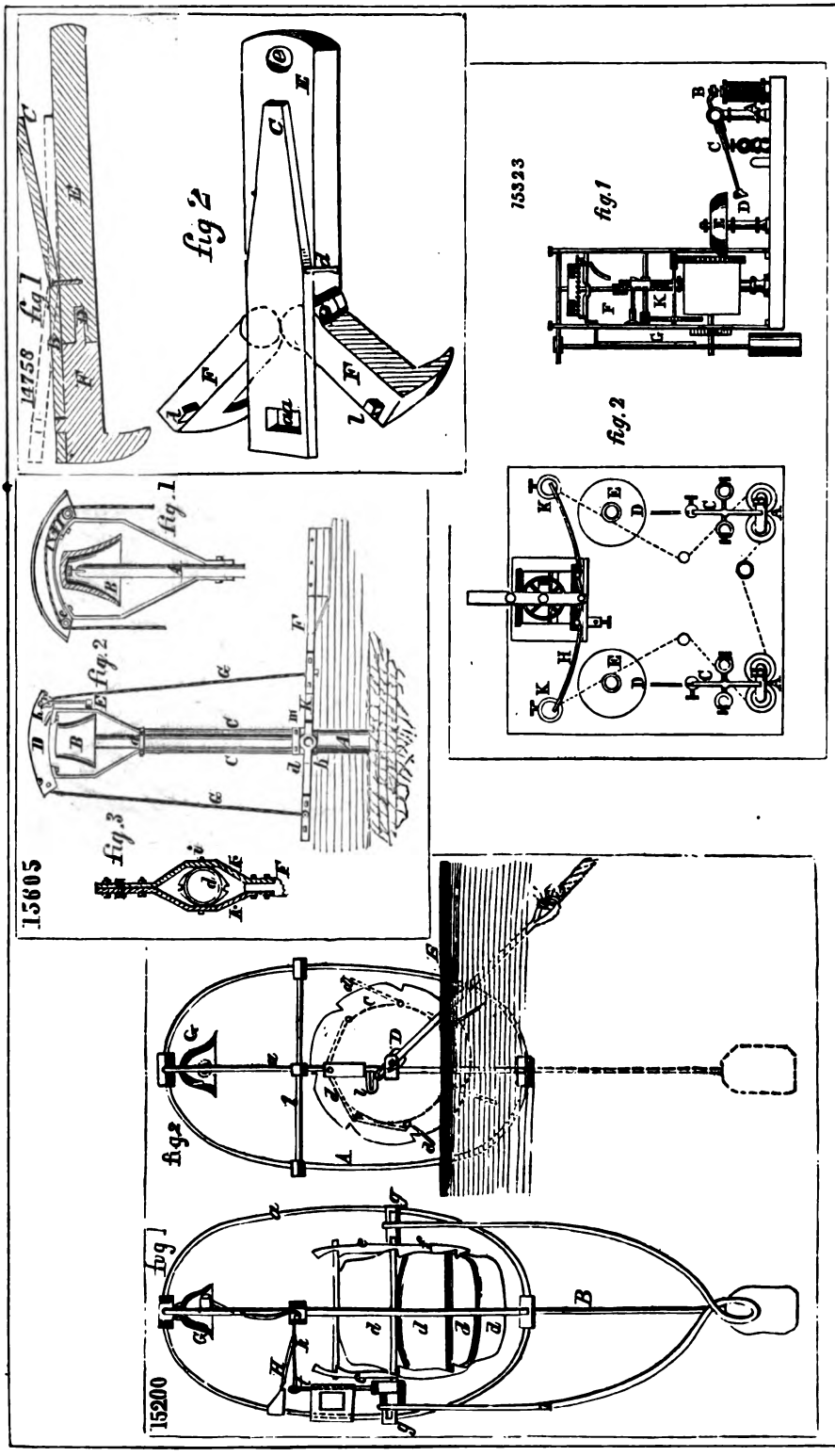

Digitized by Google

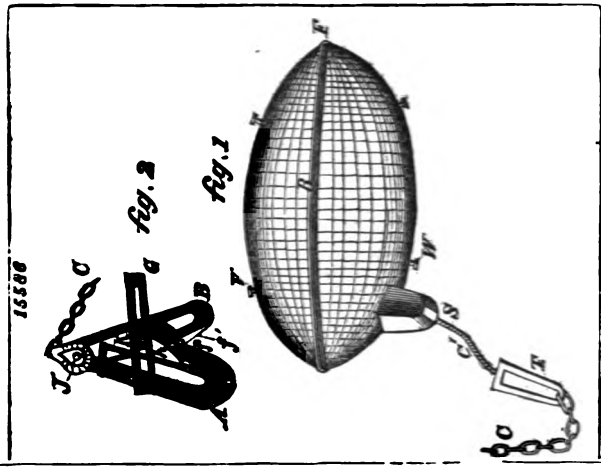

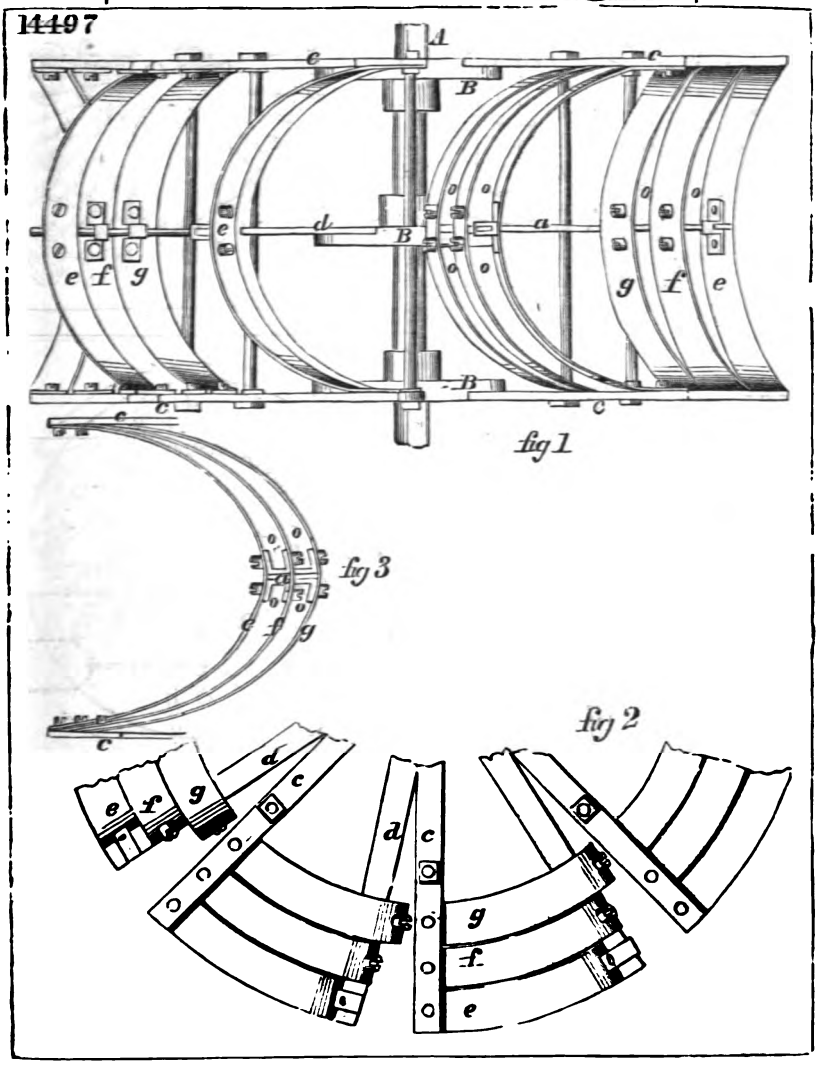

Digitized by Google

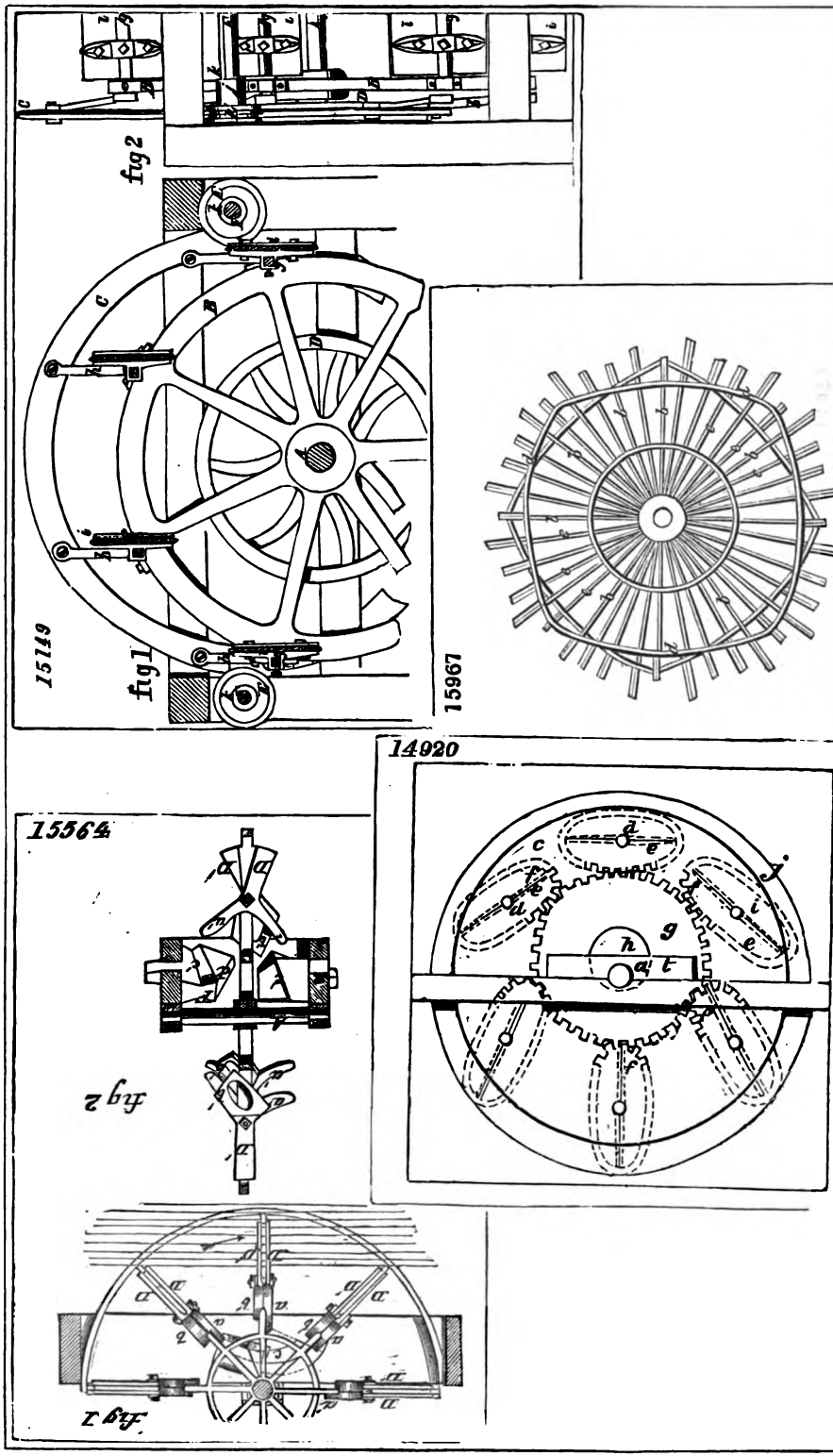

Digitized by Google

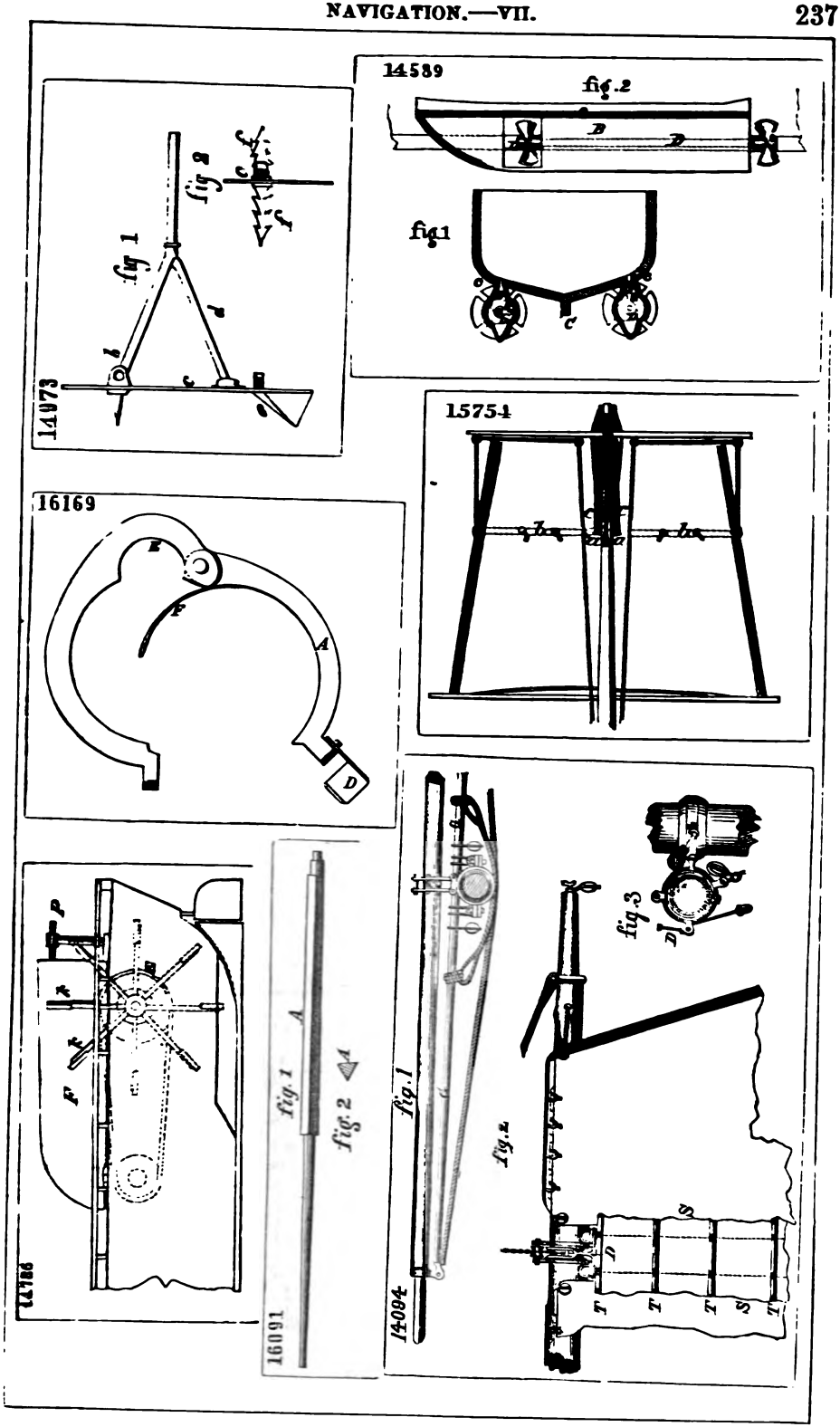

Digitized by Google

14365

fig. 2

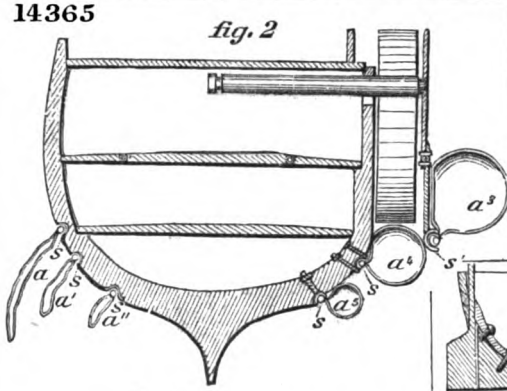

15837

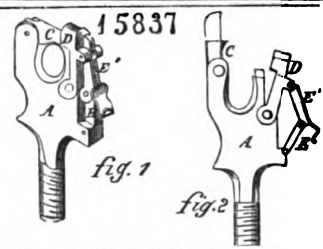

fig. 1

fig. 2

14048

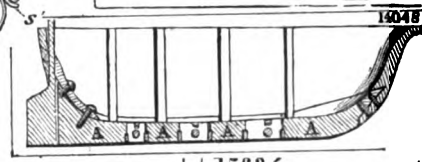

fig. 1

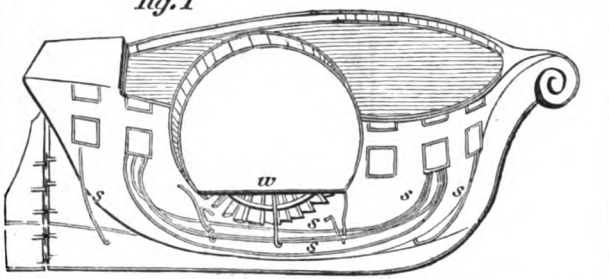

15624

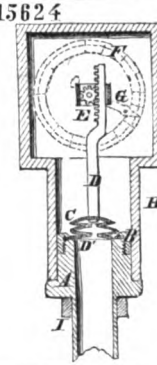

14113

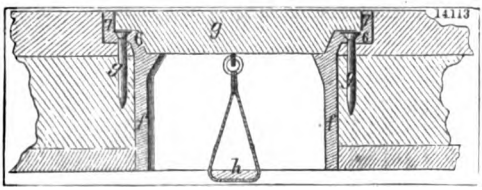

15090

fig. 1.

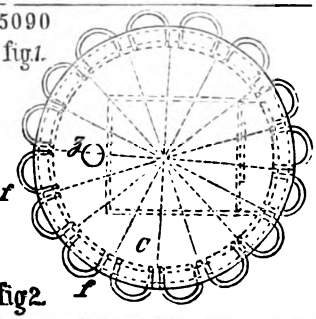

fig 2

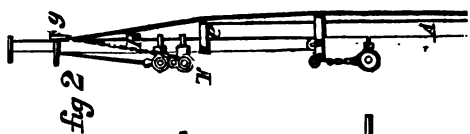

fig 1

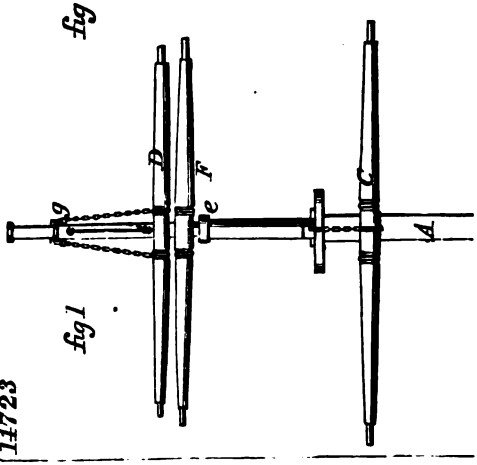

fig 2.

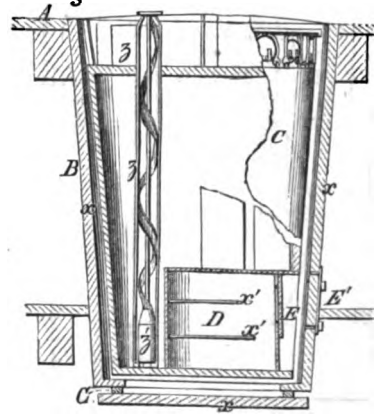

14723

Digitized by Google

14377

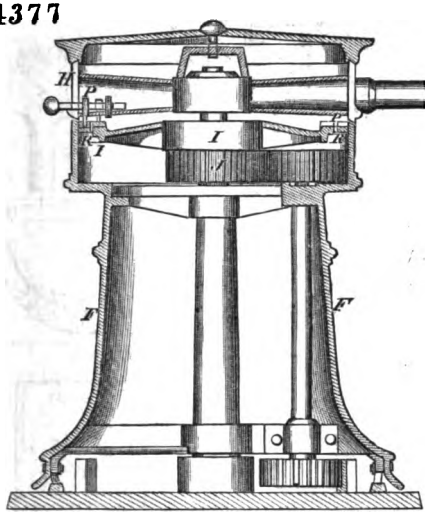

15886

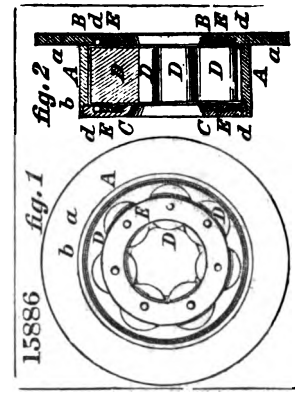

14983

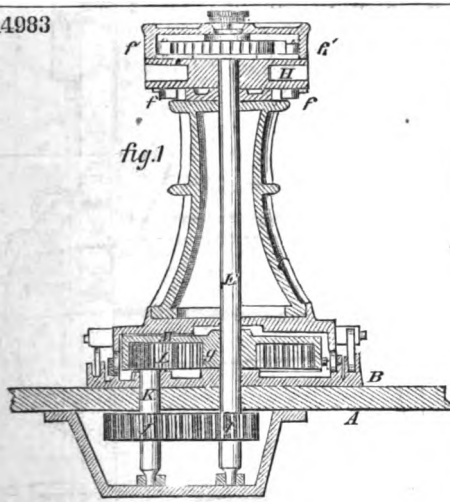

15933

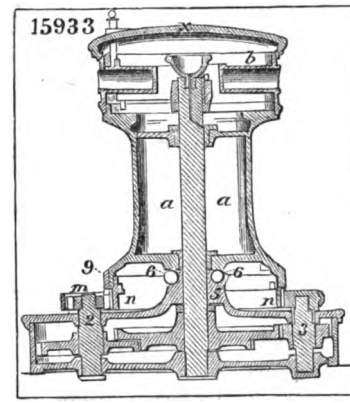

15817

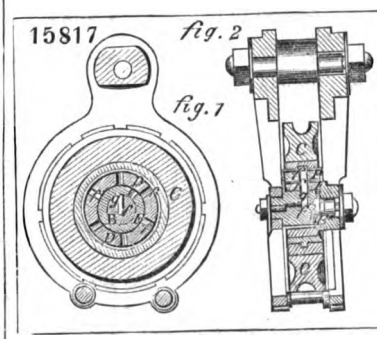

fig. 2

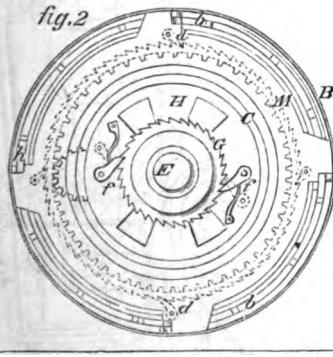

Digitized by Google

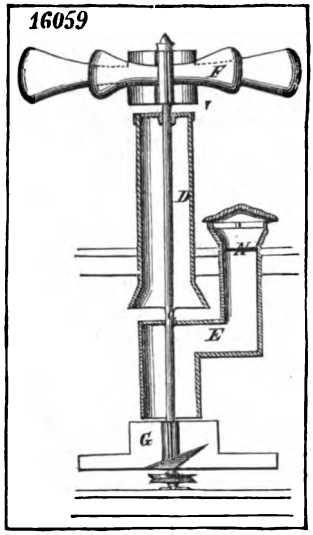

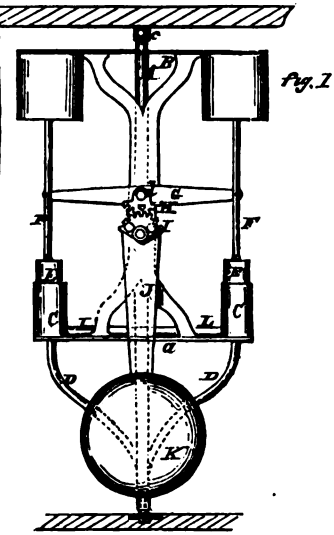

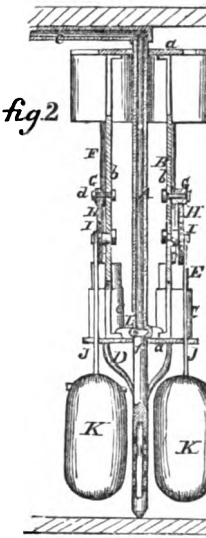

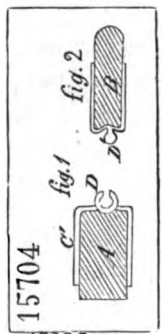

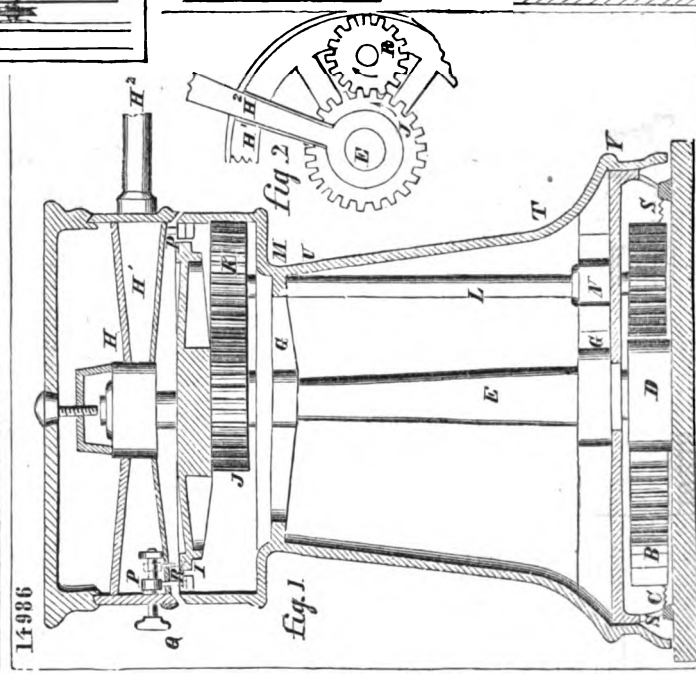

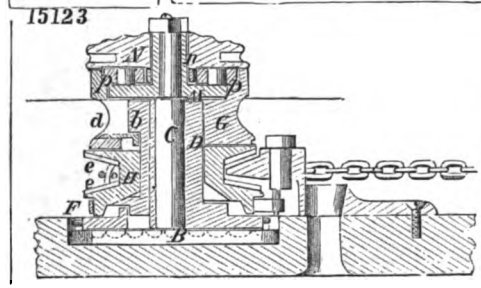

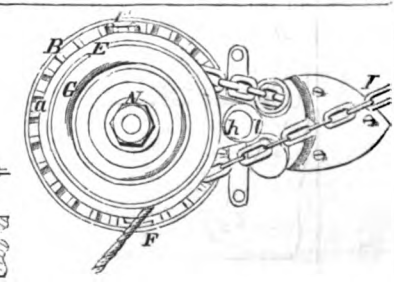

Digitized by Google

15732

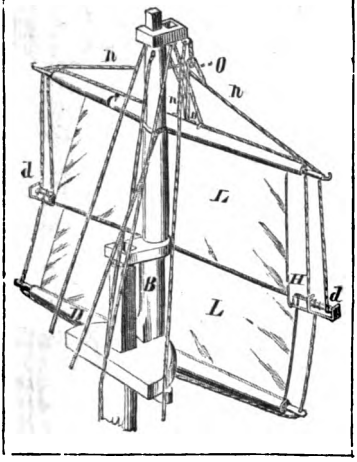

16045

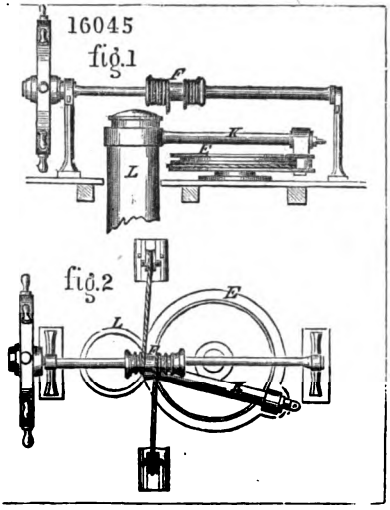

16238

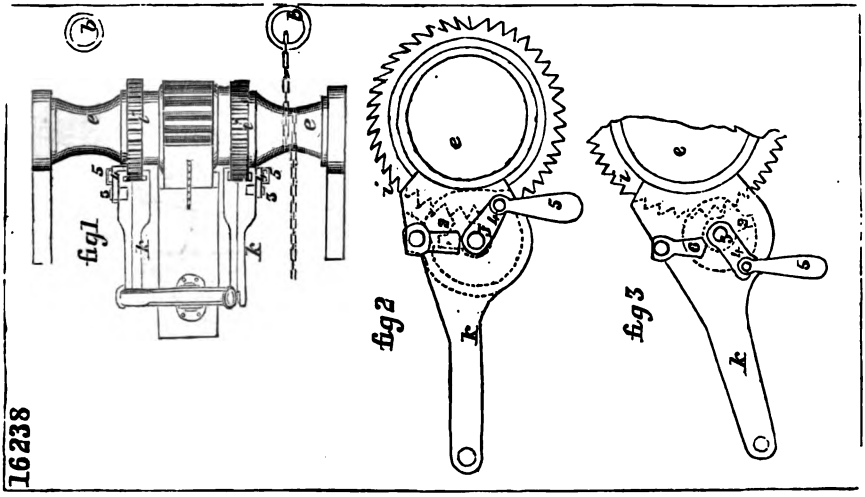

16165

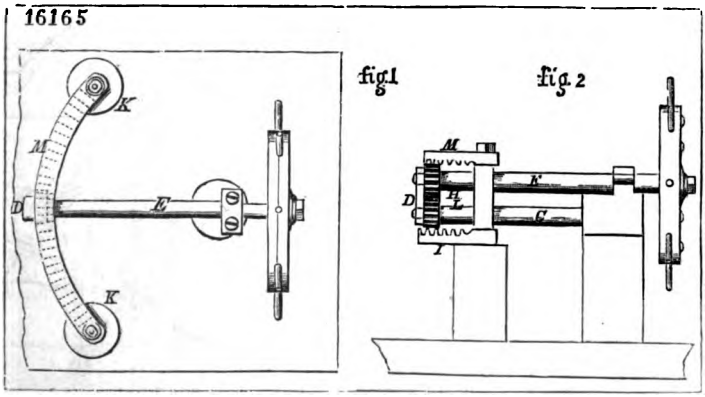

Digitized by Google

16000

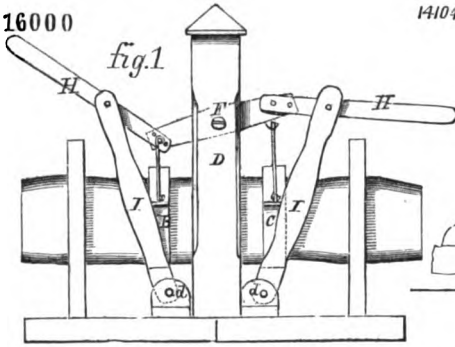

14104

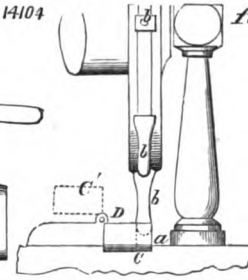

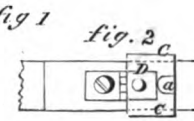

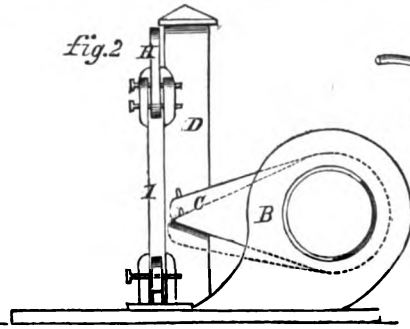

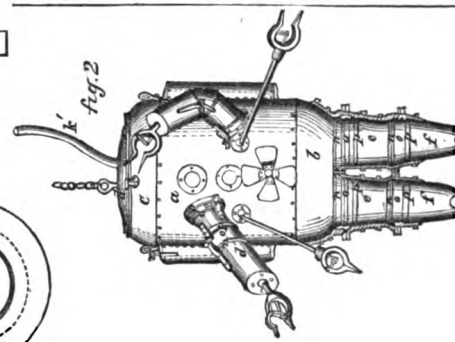

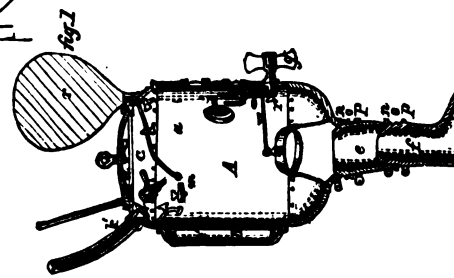

15868

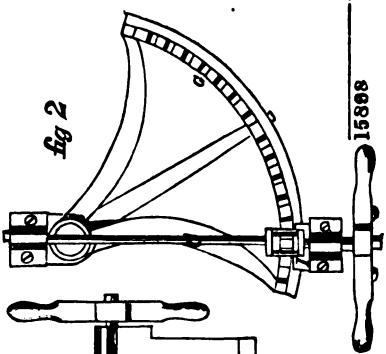

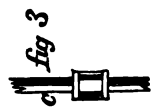

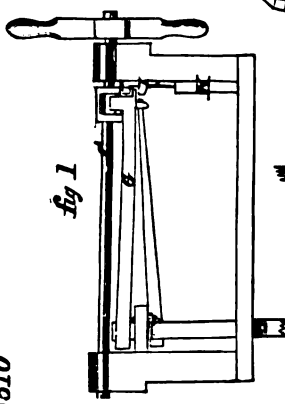

15085

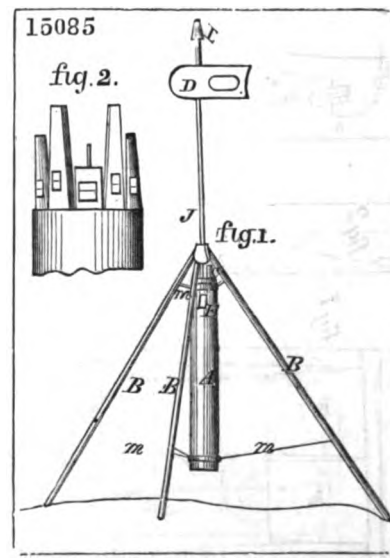

15510

Digitized by Google

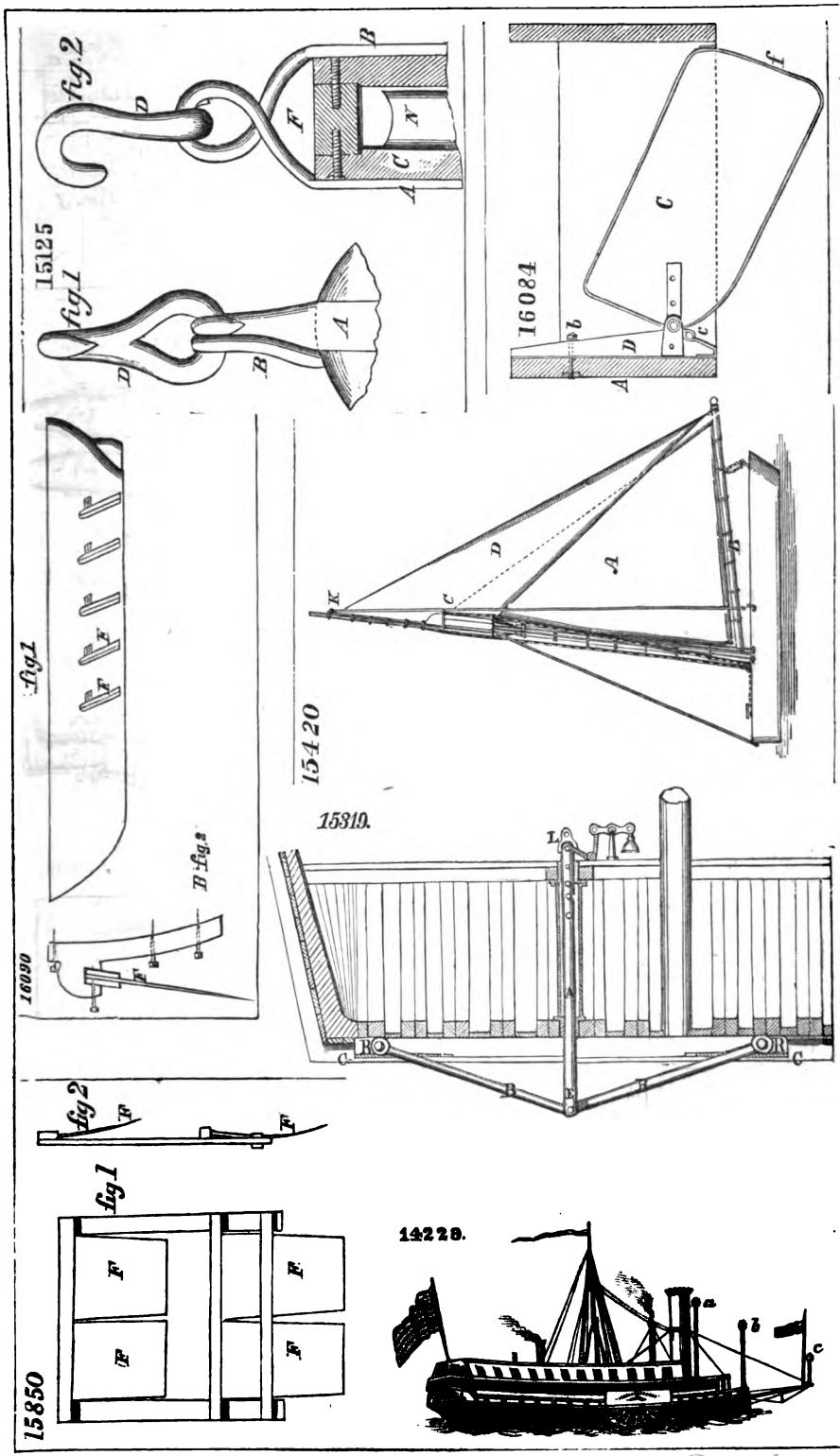

Digitized by Google

14487

fig 1

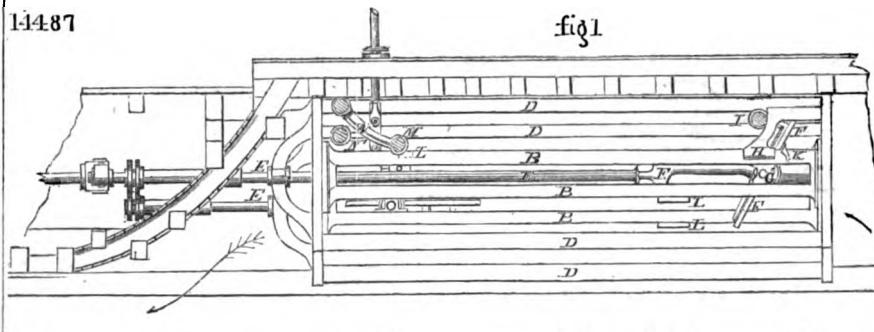

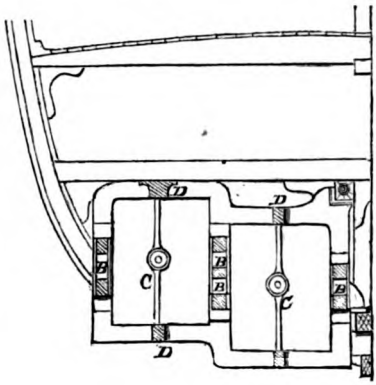

fig. 2

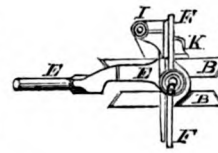

fig. 3

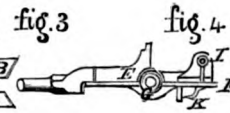

fig. 4

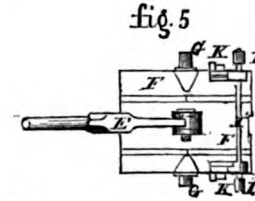

fig. 5

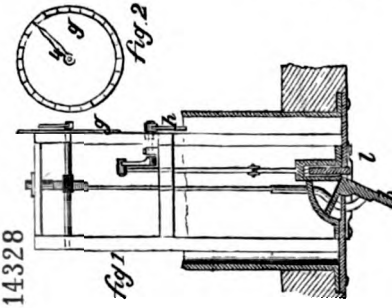

fig. 2

fig 1

14328

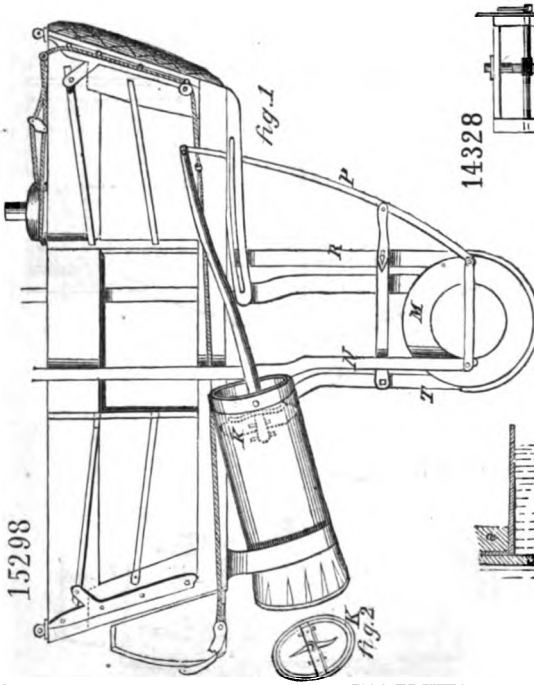

fig. 1

fig. 2

15298

14035.

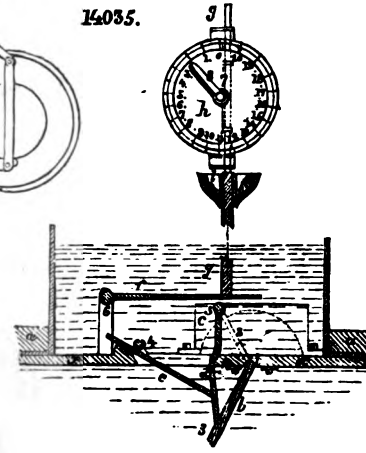

Digitized by Google

15637

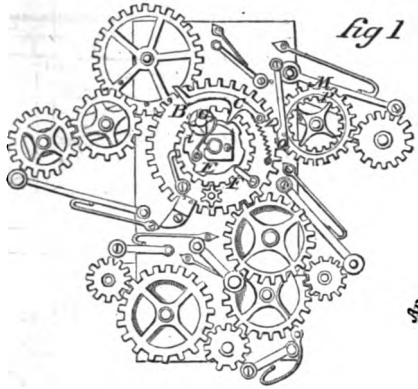

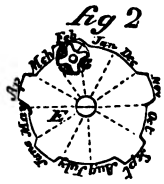

15359

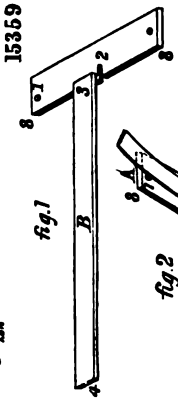

14645

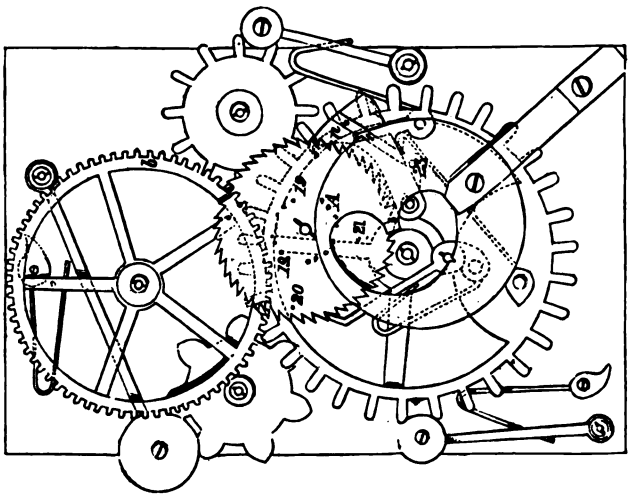

14657

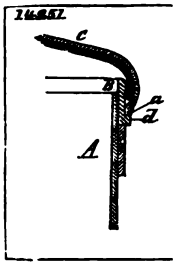

15565

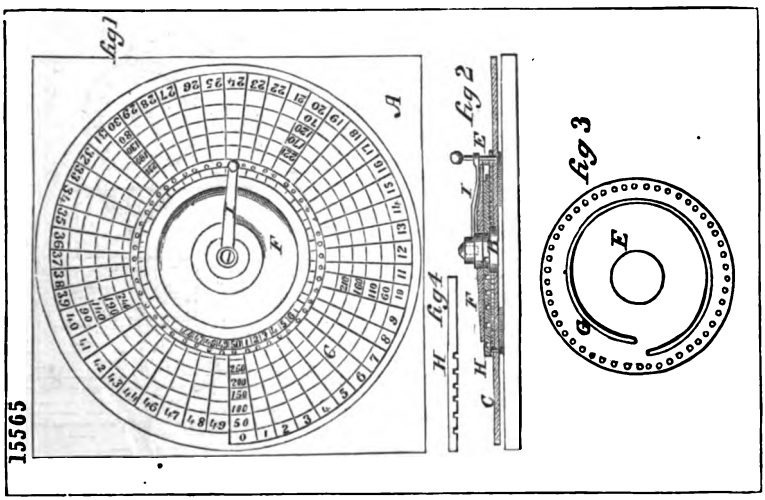

Digitized by Google

15017

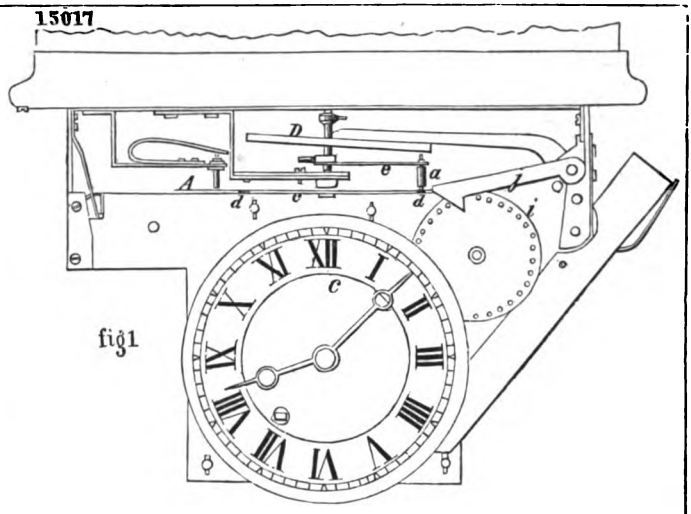

fig 1

fig. 2

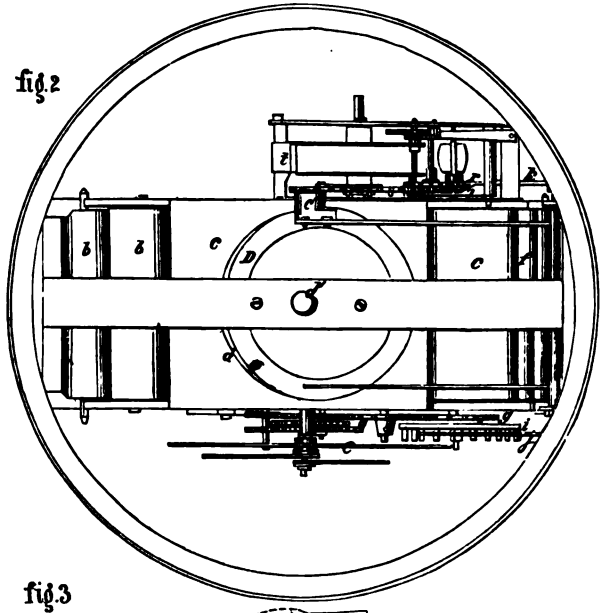

fig. 3

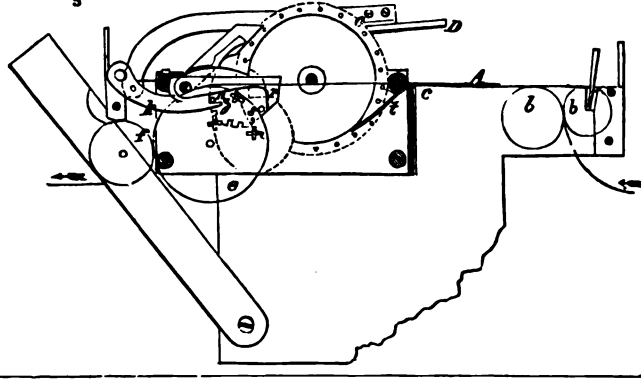

Digitized by Google

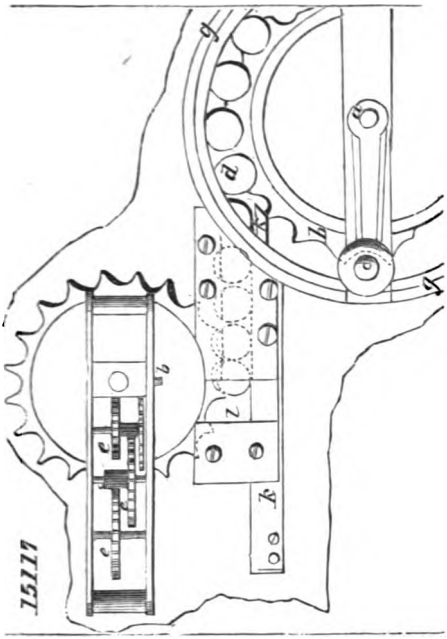

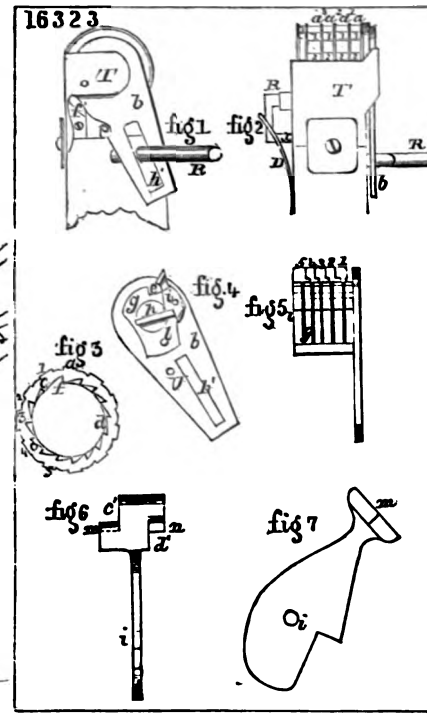

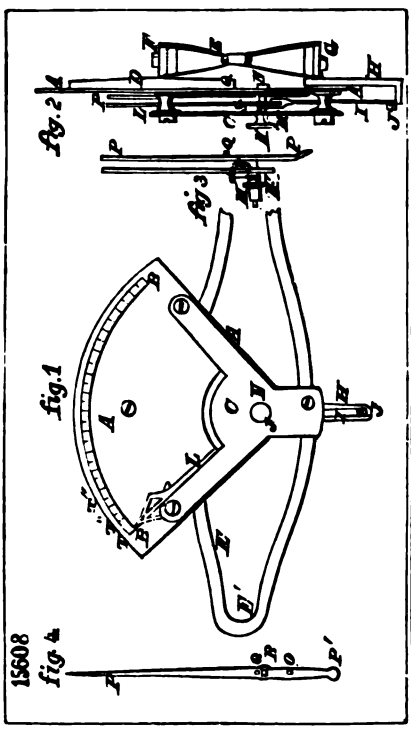

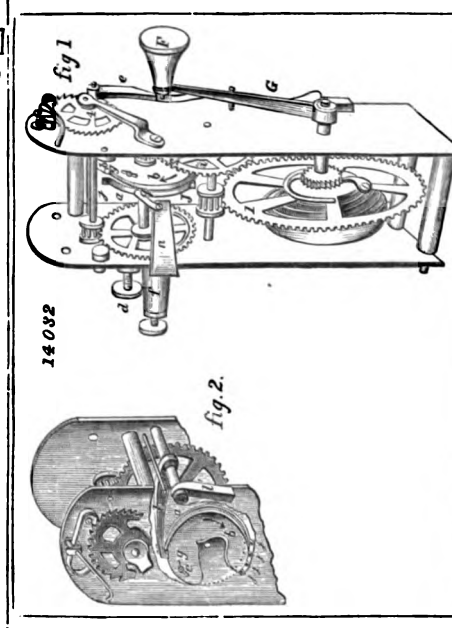

Digitized by Google

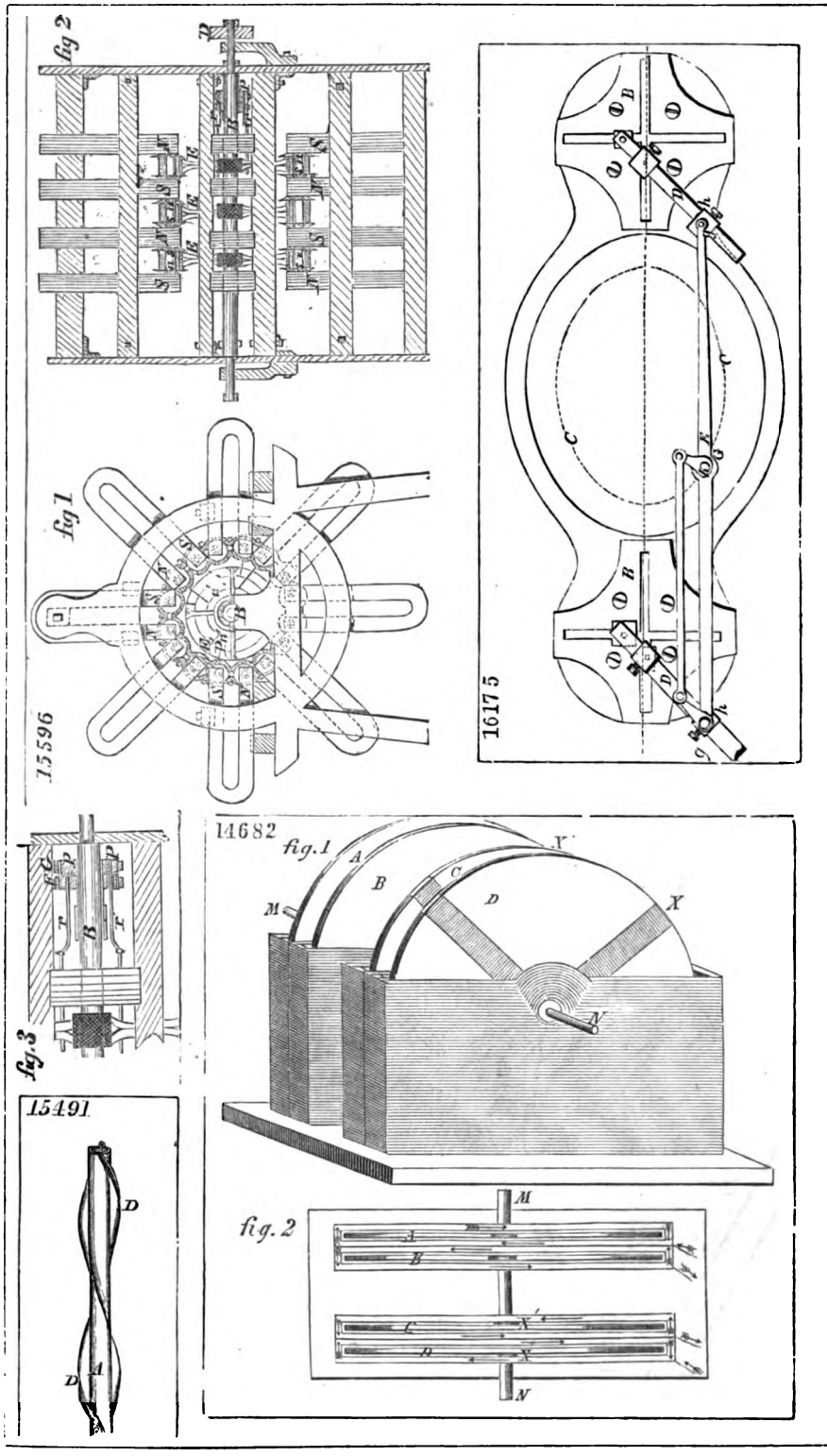

Digitized by Google

14857

4598

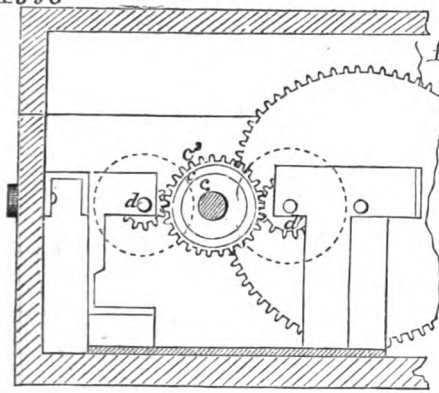

fig1

fig.2

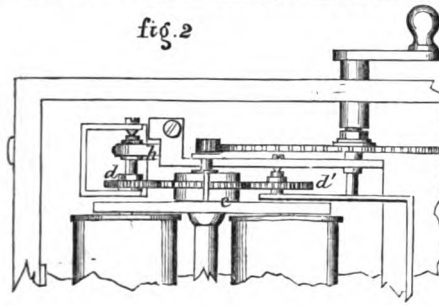

fig.1

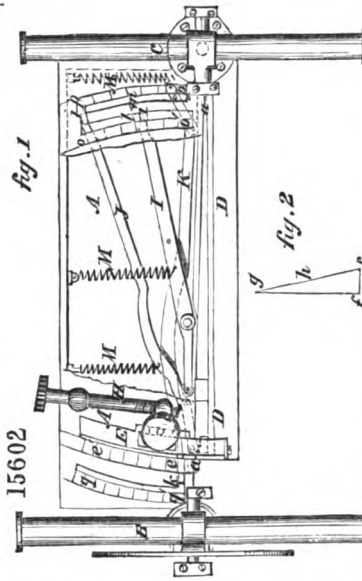

fig.2

15602

15040

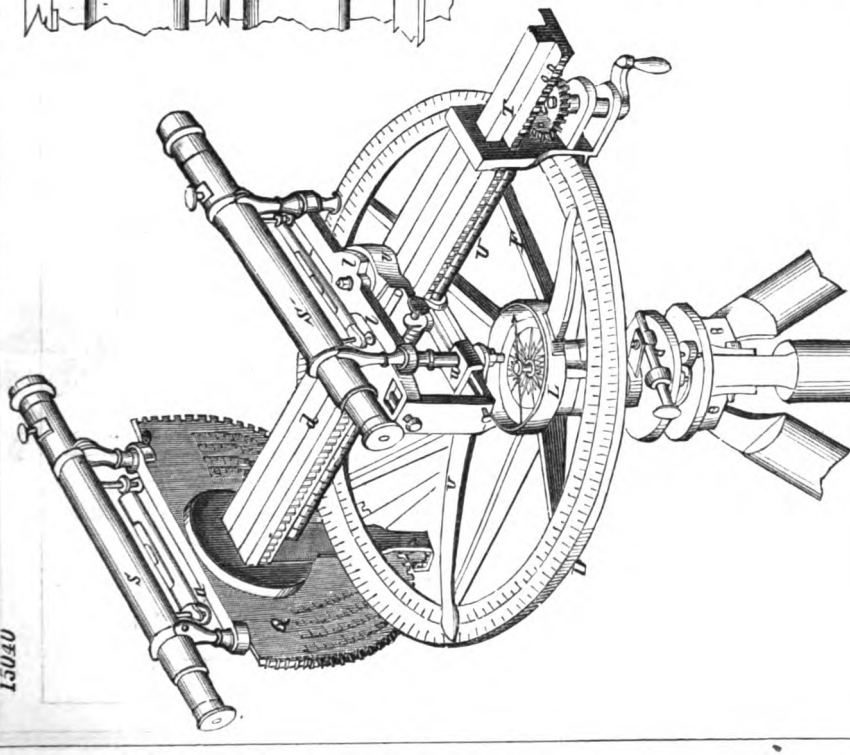

Digitized by Google

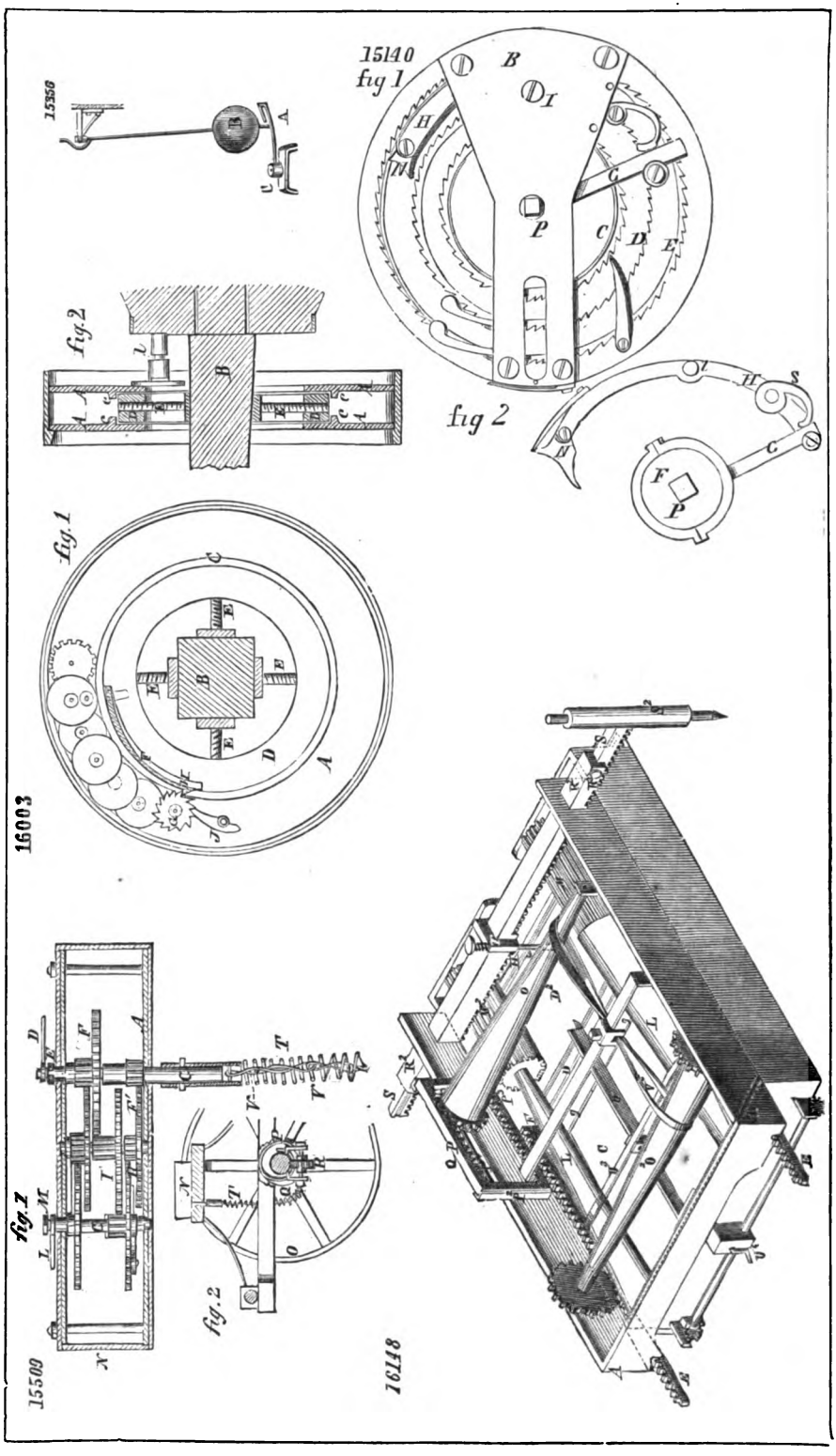

Digitized by Google

15162

fig 1

fig 2

Fig. 2

Fig 4

Fig. 1

15183

Fig 3

14396

fig. 1

fig. 2

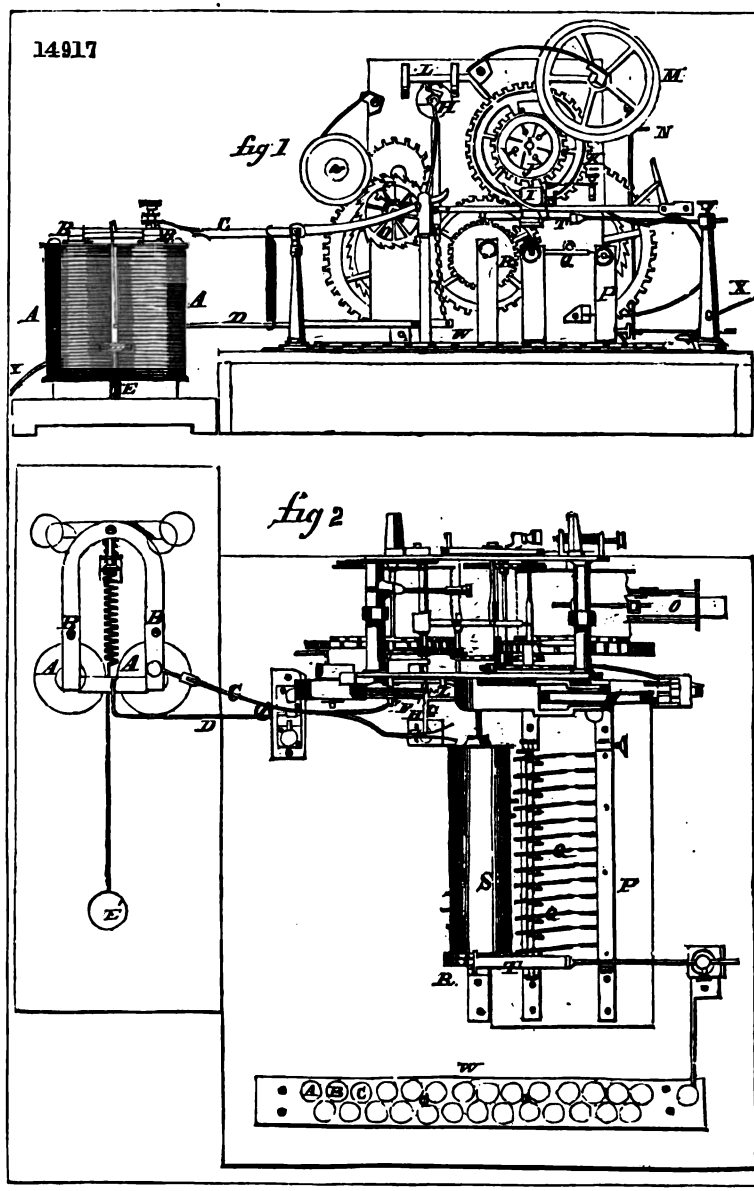

Digitized by Google

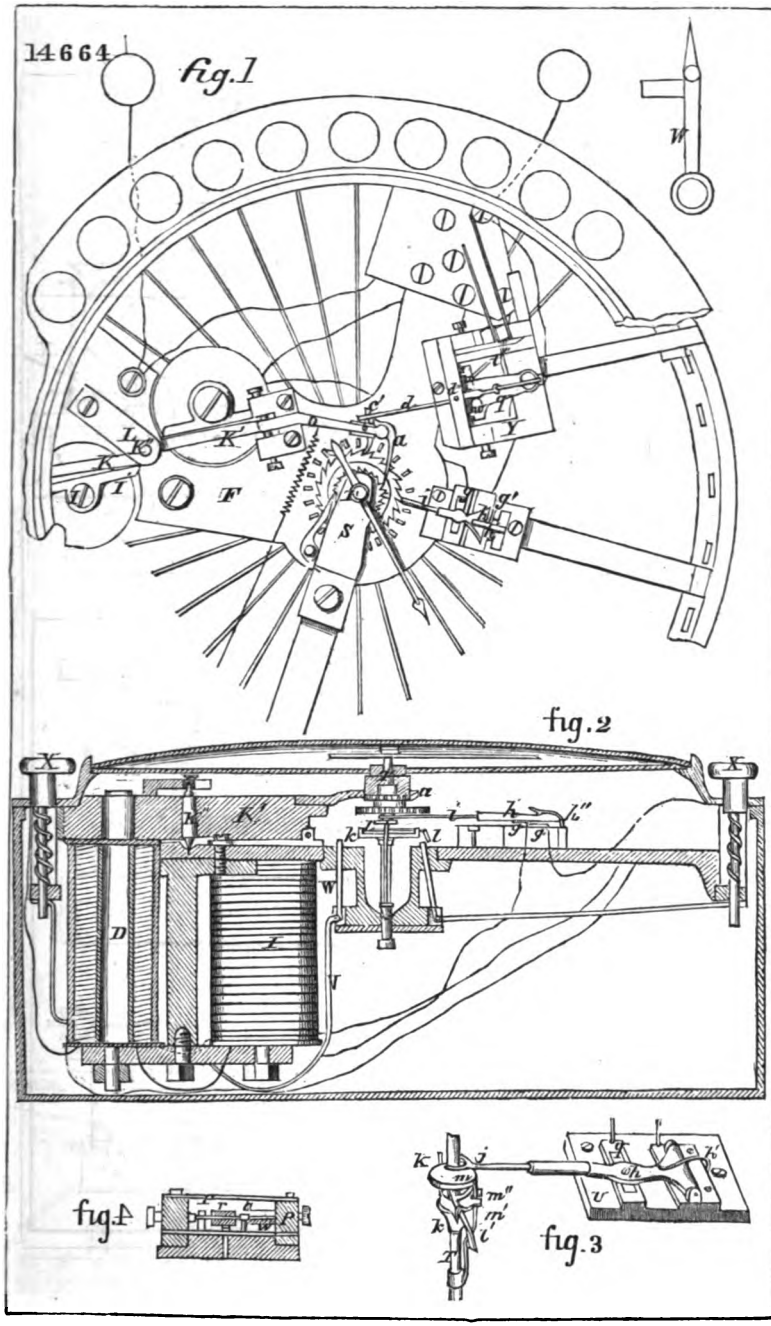

Digitized by Google

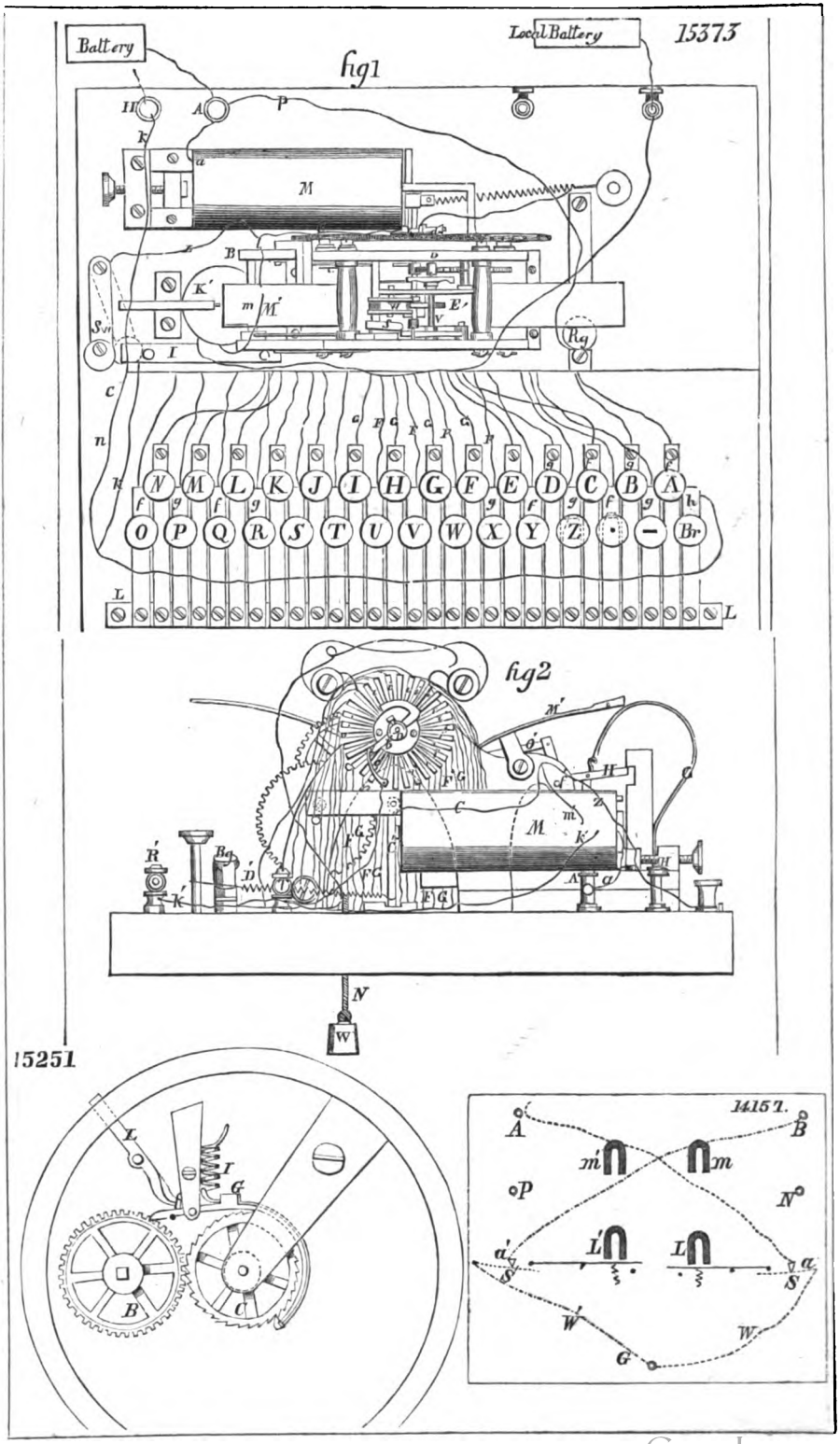

Digitized by Google

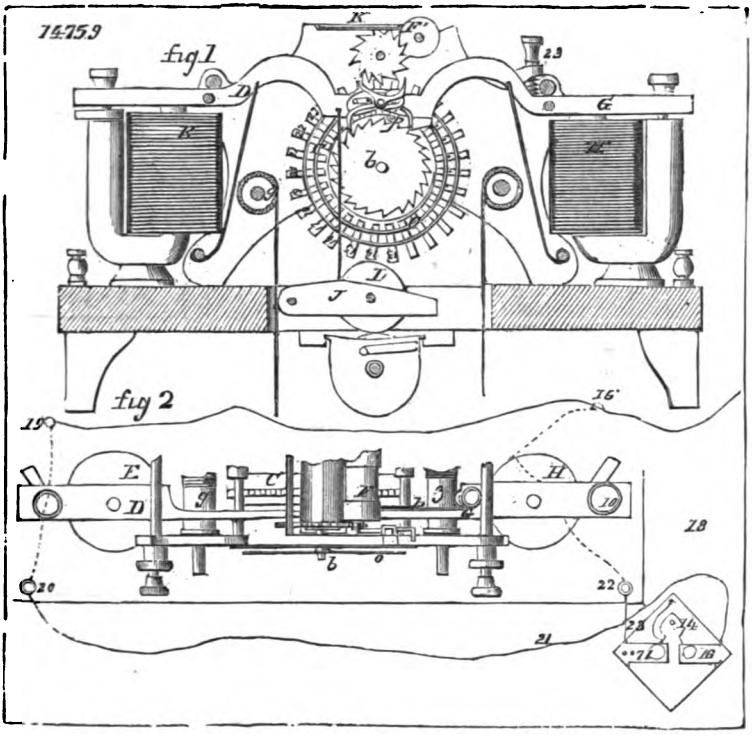
14759
fig 1
fig 2

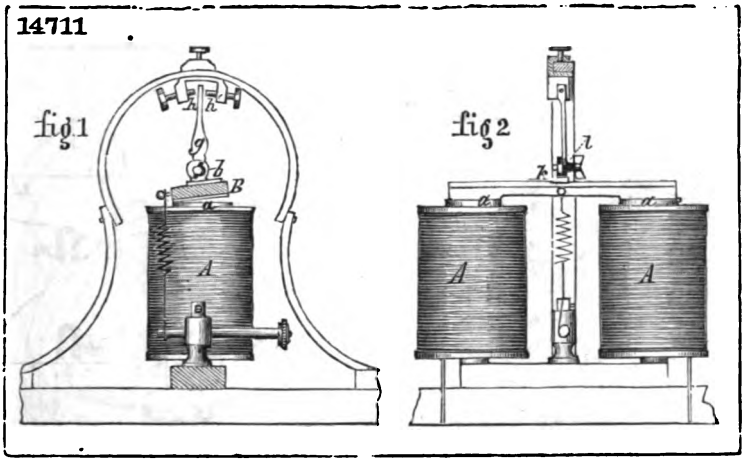
14711
fig 1
fig 2

14731

fig 1

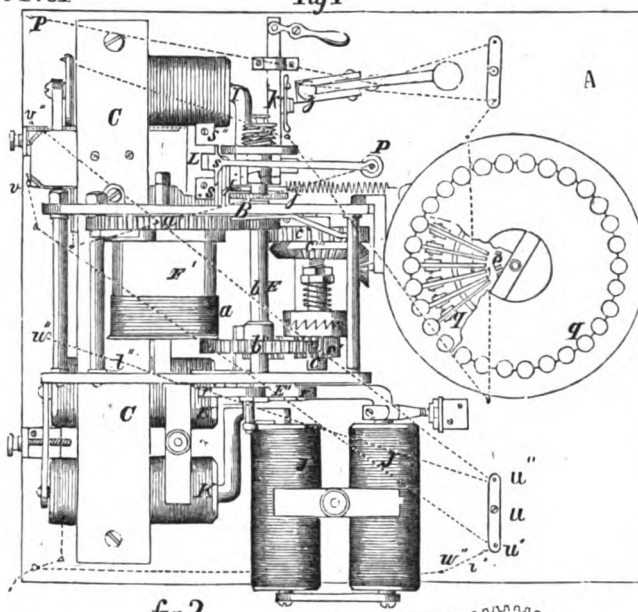

fig 2

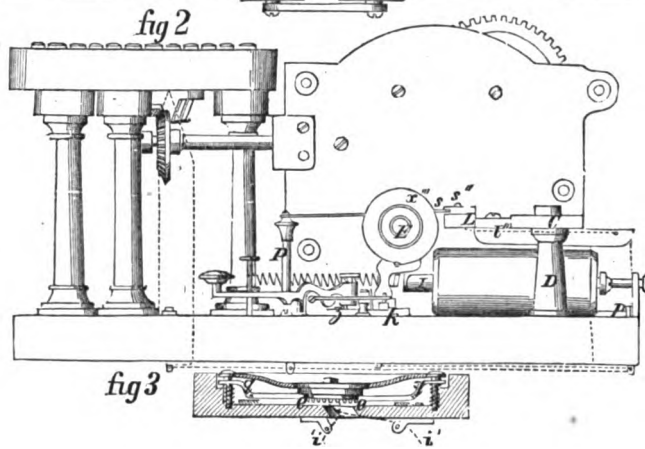

fig 3

16002

fig. 1

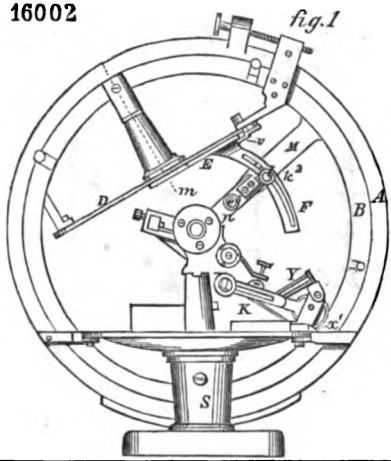

fig. 2

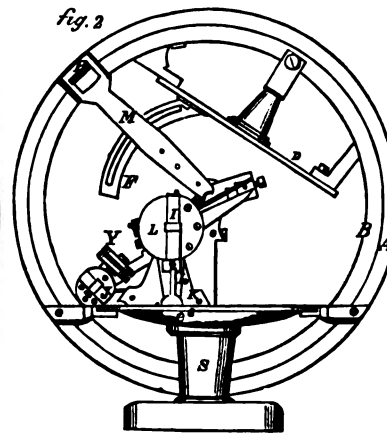

Digitized by Google

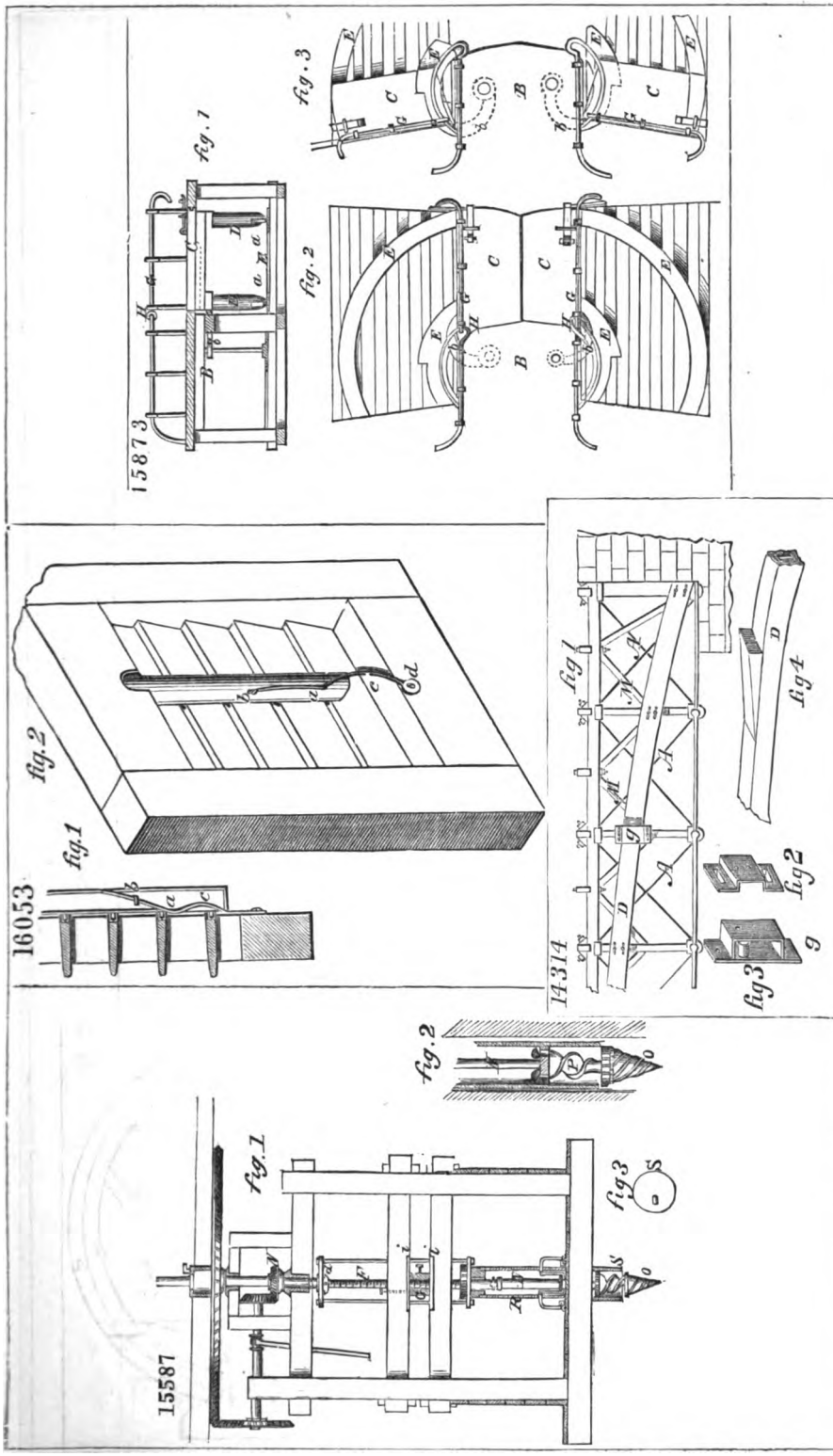

Digitized by Google

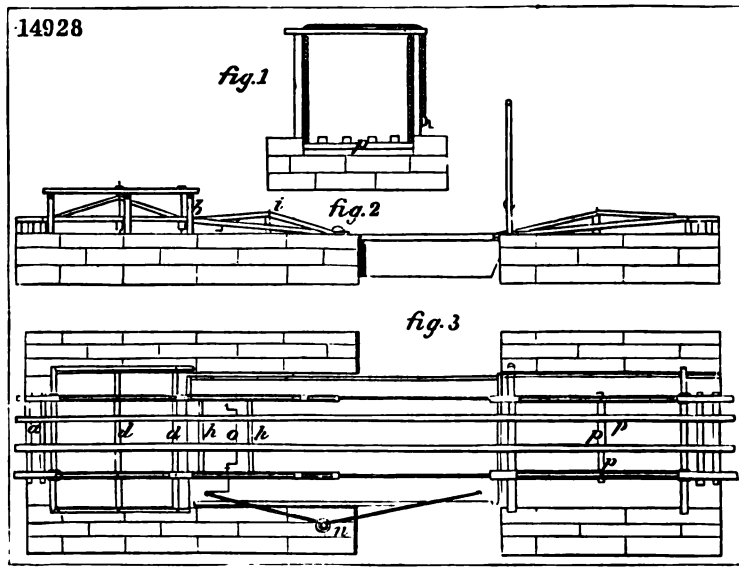

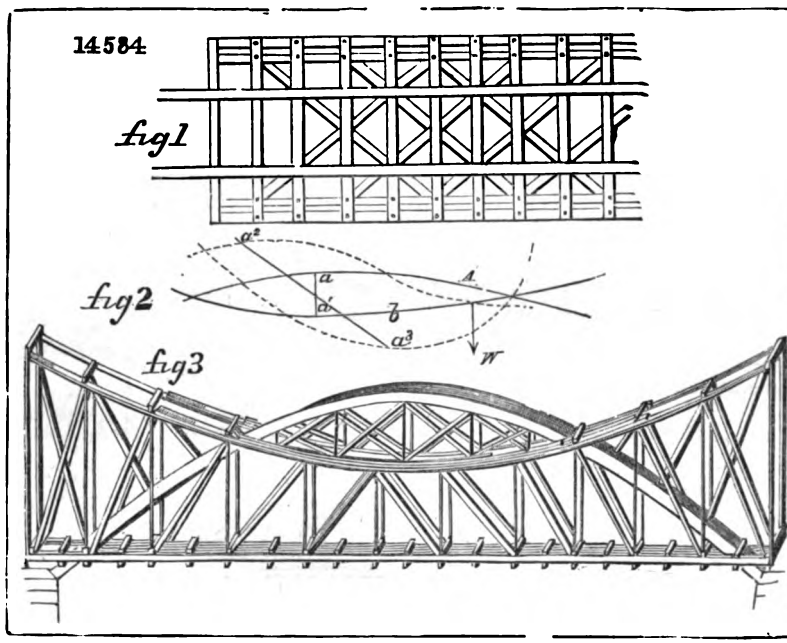

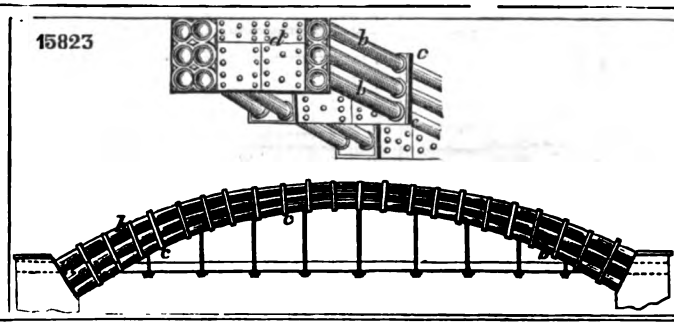

Digitized by Google

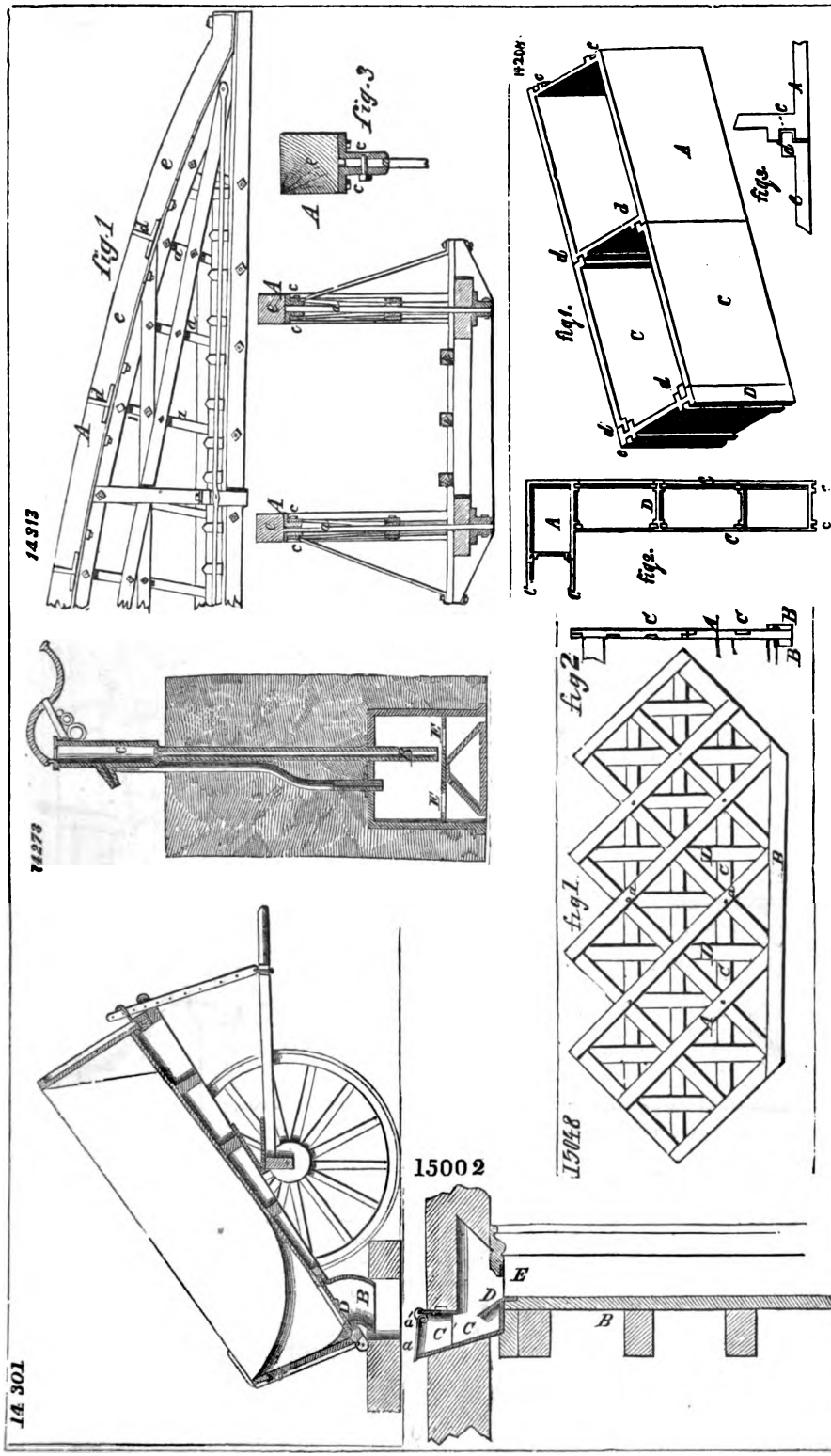
14313
fig. 1
fig. 3
14204
fig. 1.
fig. 2.
fig. 3.
14273
fig. 2
fig. 1.
15048
15002
14301

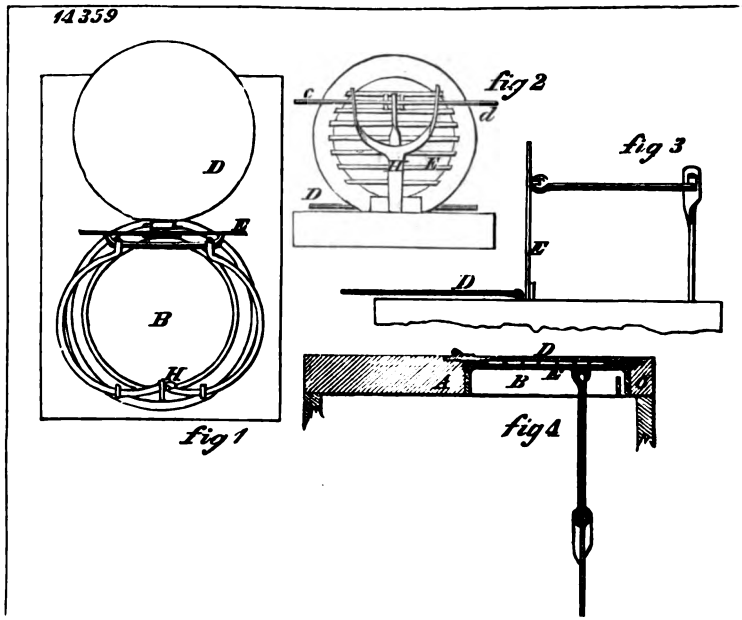

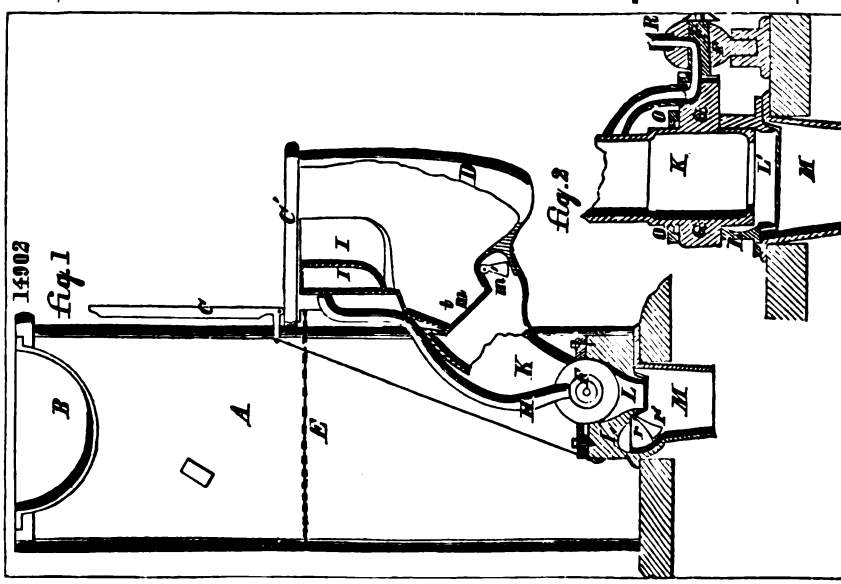

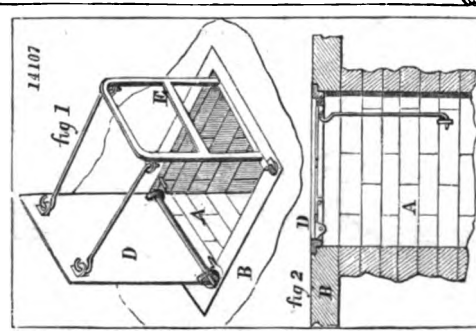

Digitized by Google

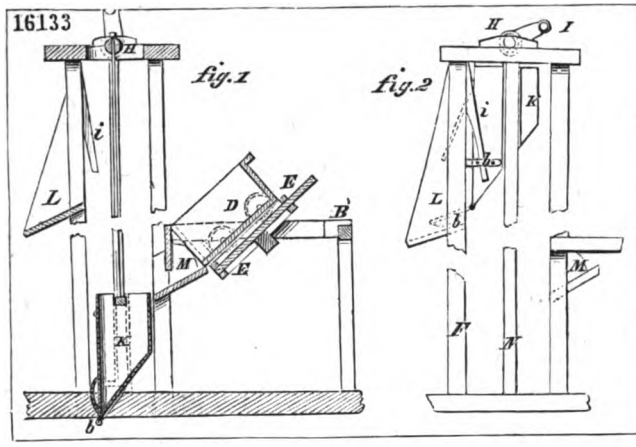

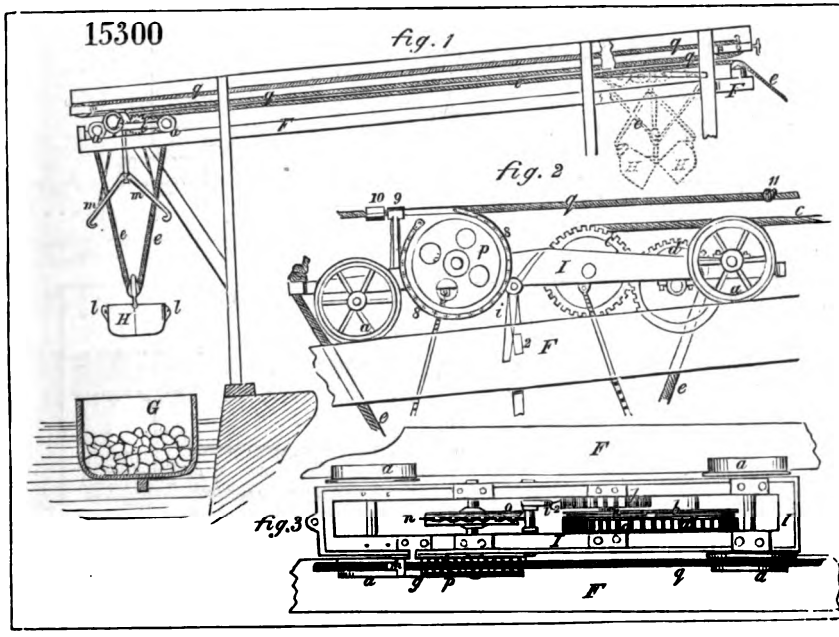

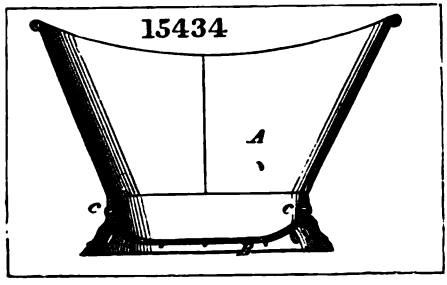

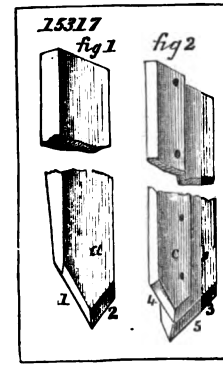

Digitized by Google

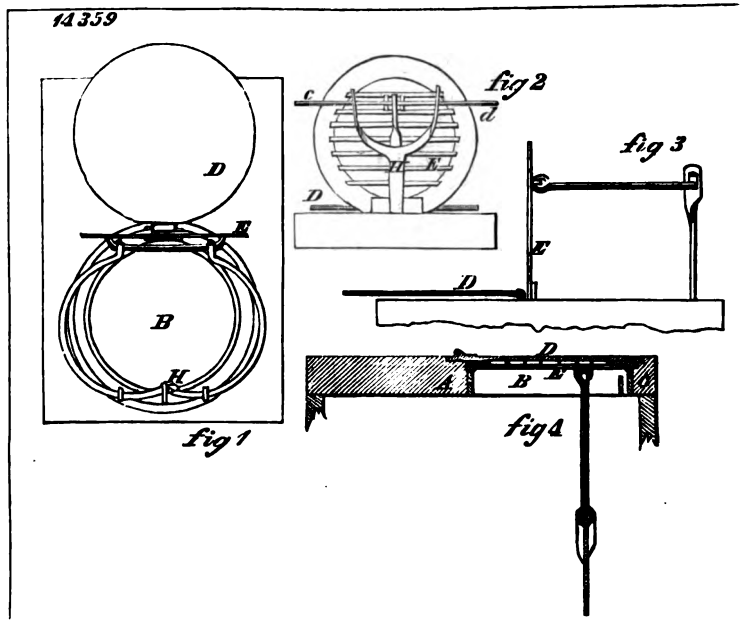

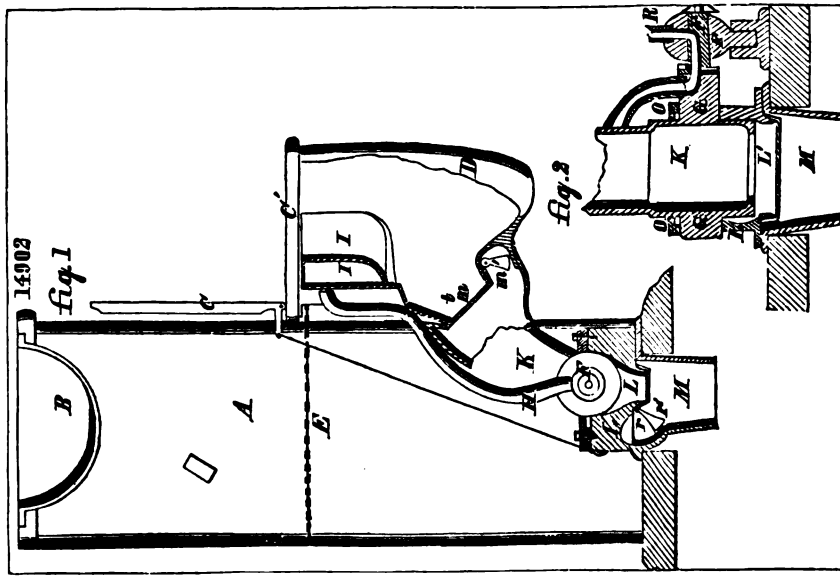

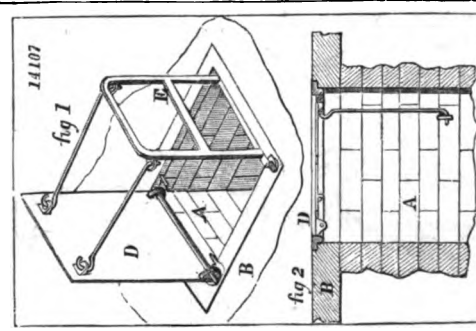

Digitized by Google

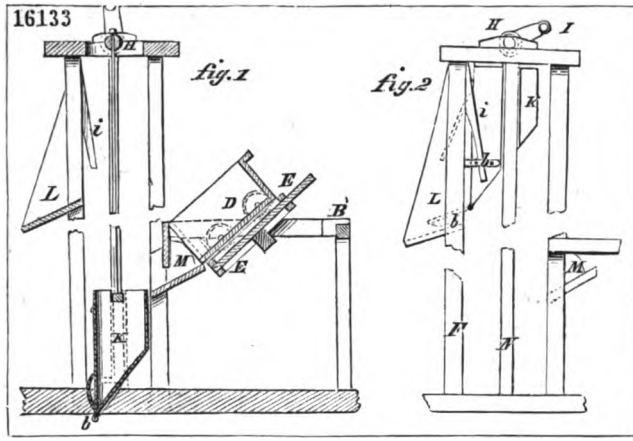

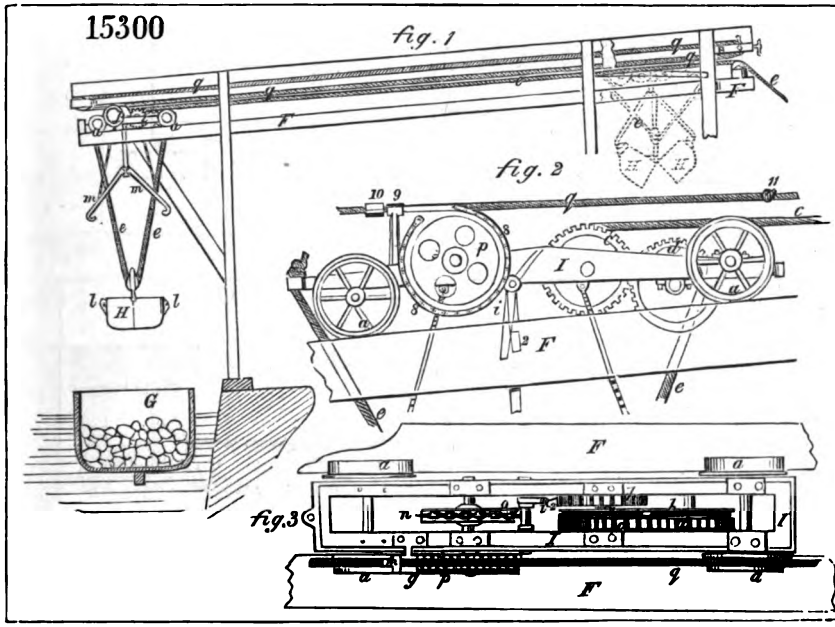

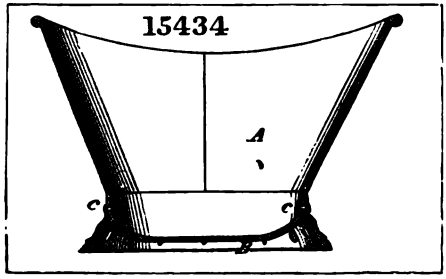

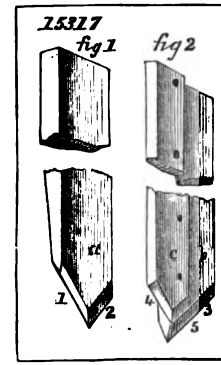

Digitized by Google

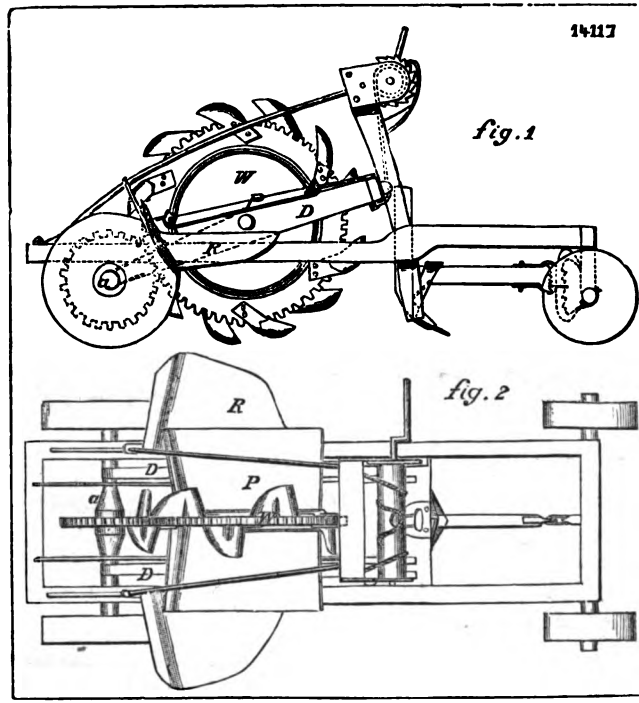

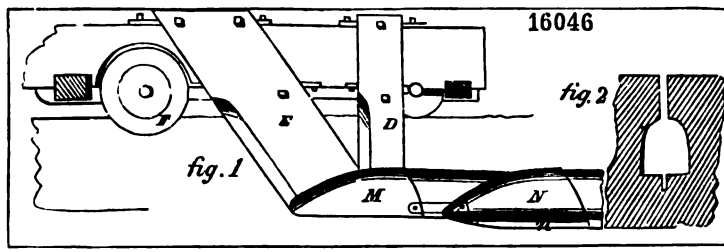

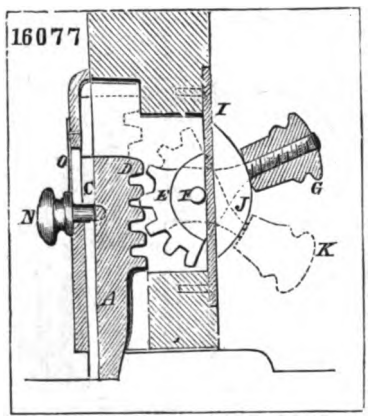

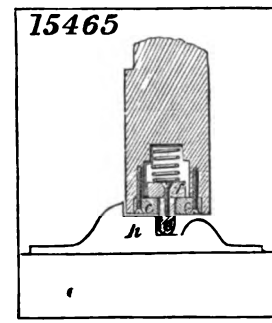

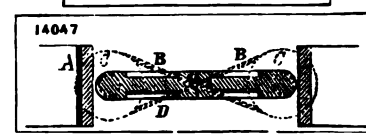

Digitized by Google

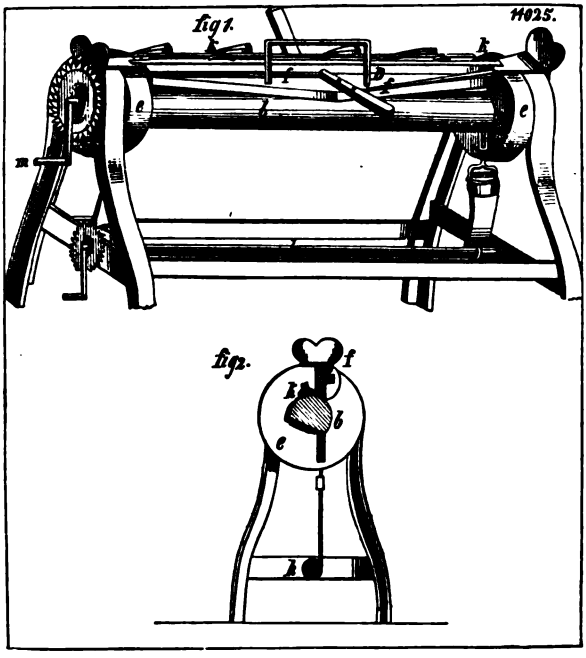

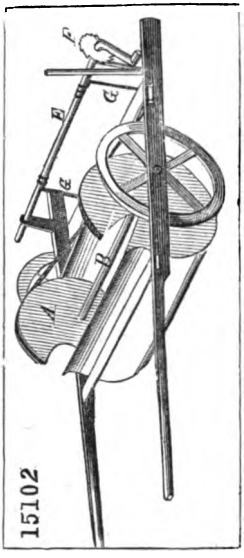

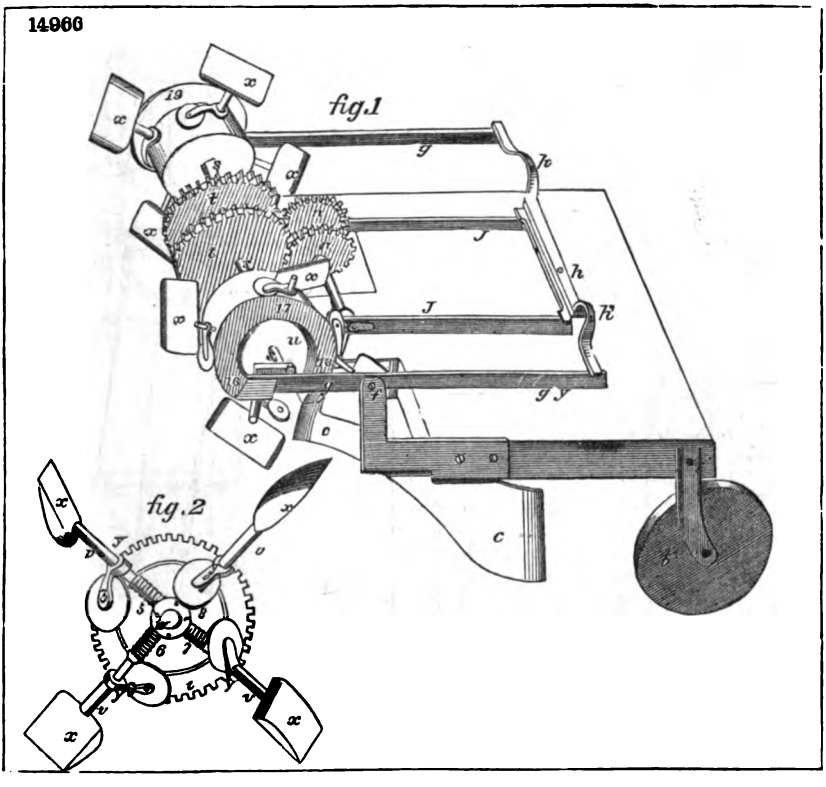

Digitized by Google

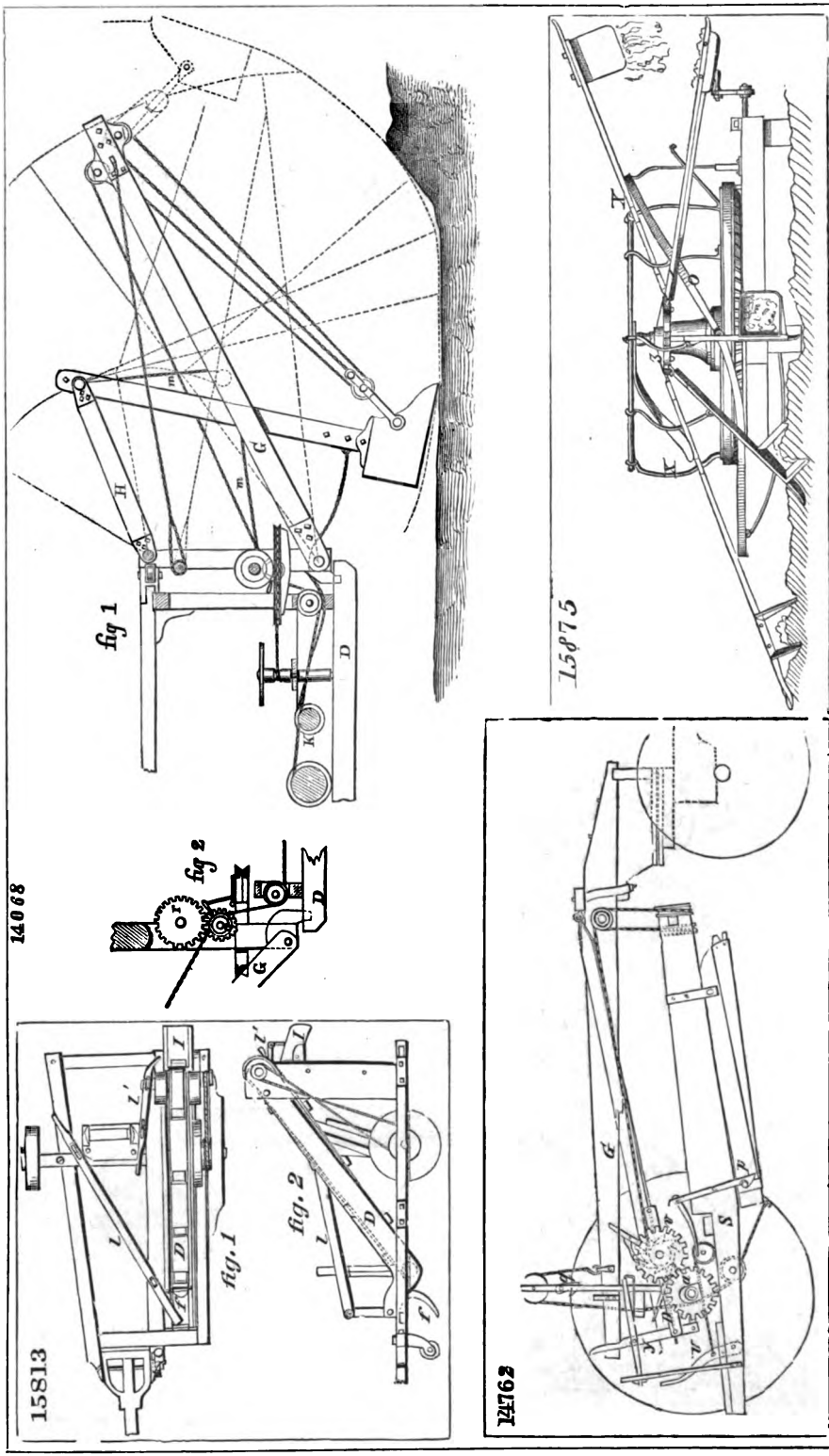

Digitized by Google

16081

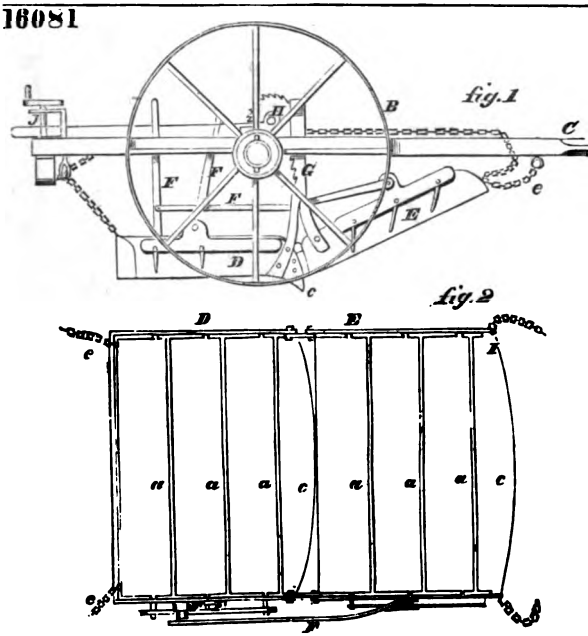

14518

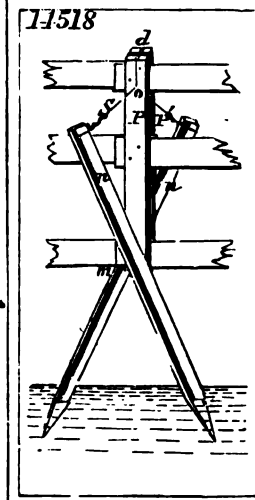

14933

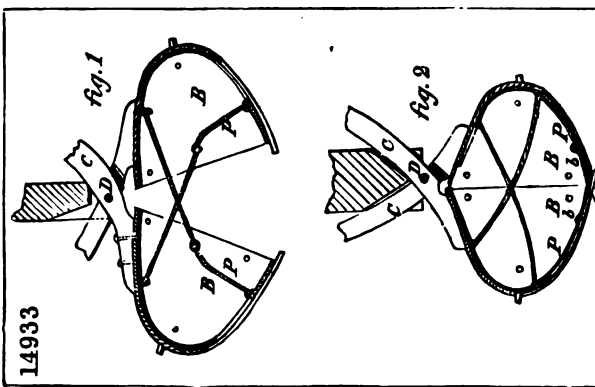

14152.

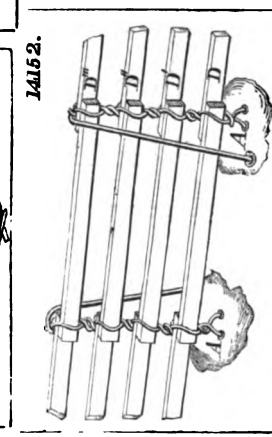

14581

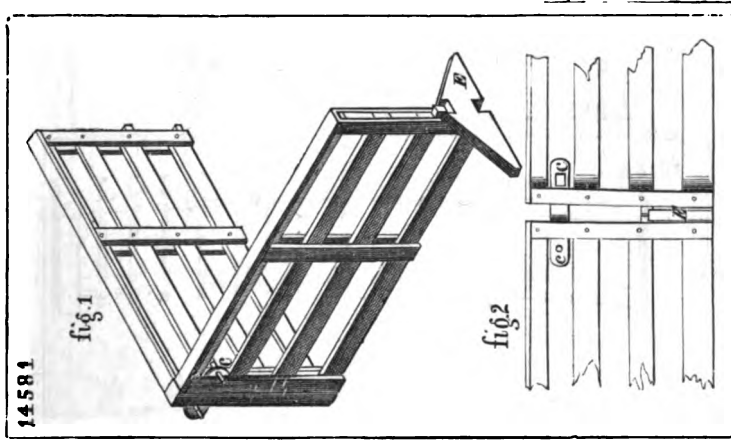

Digitized by Google

15561.

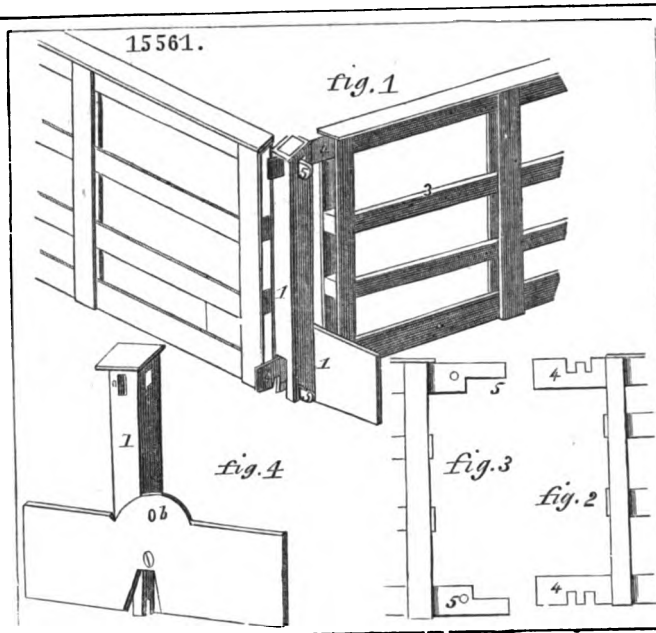

16236

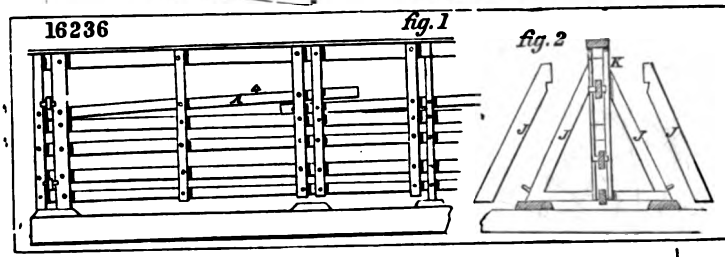

16265

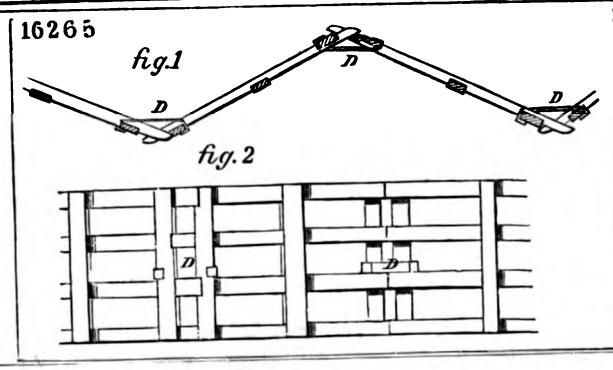

15188

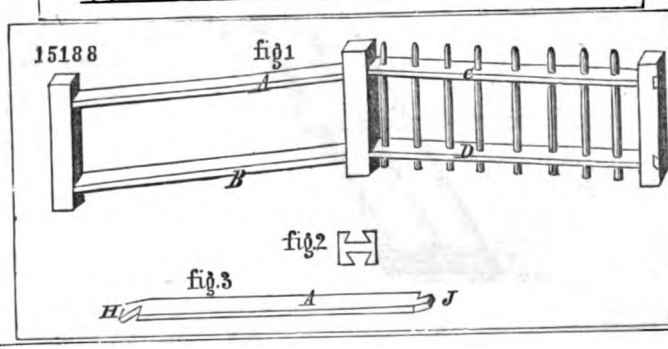

Digitized by Google

16181

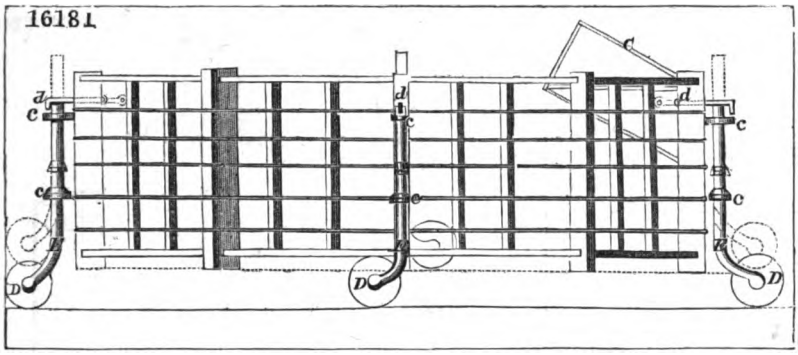

14519

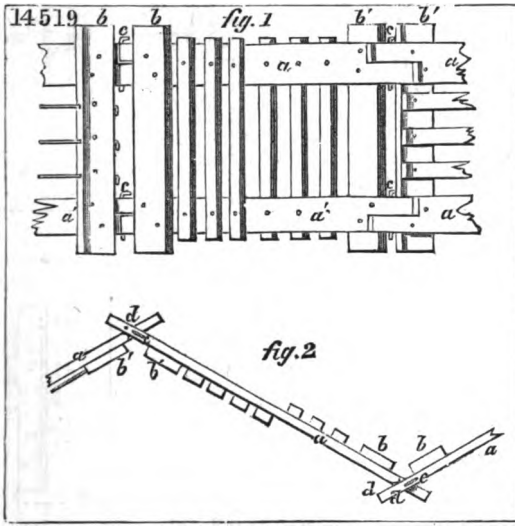

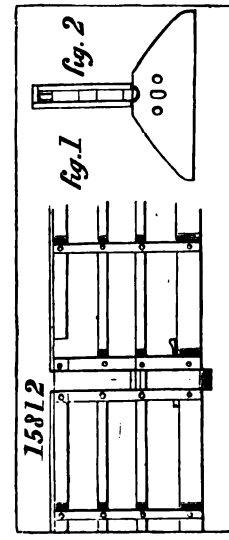

16172

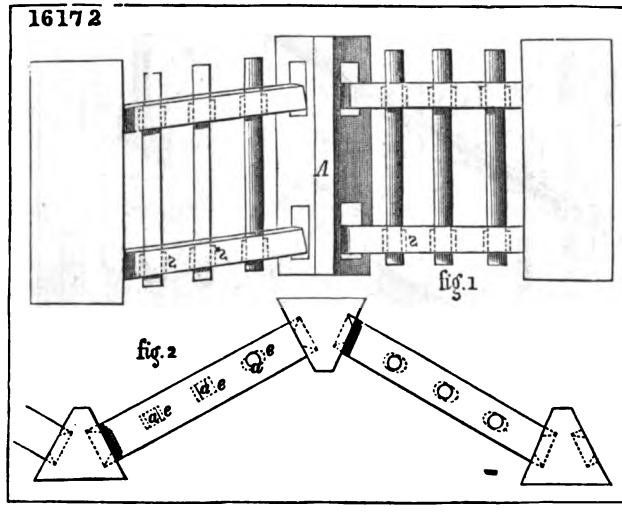

Digitized by Google

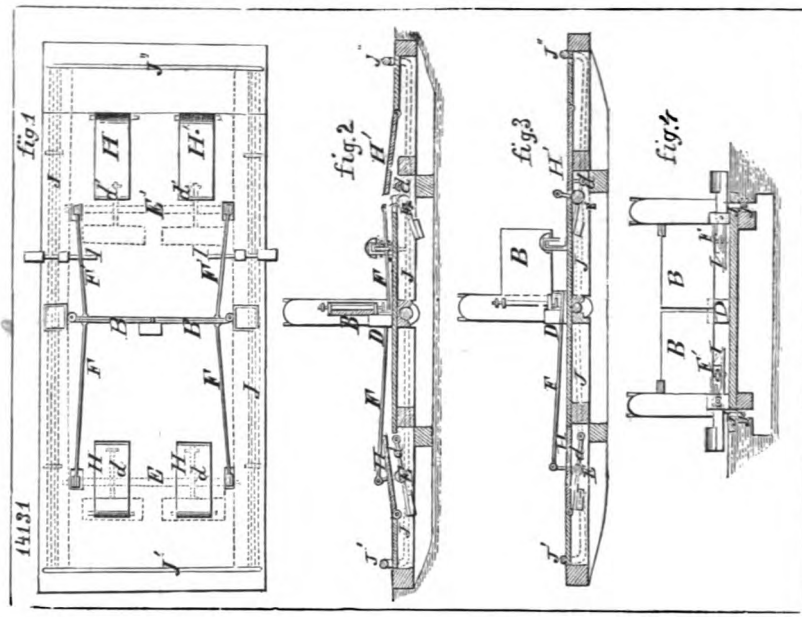

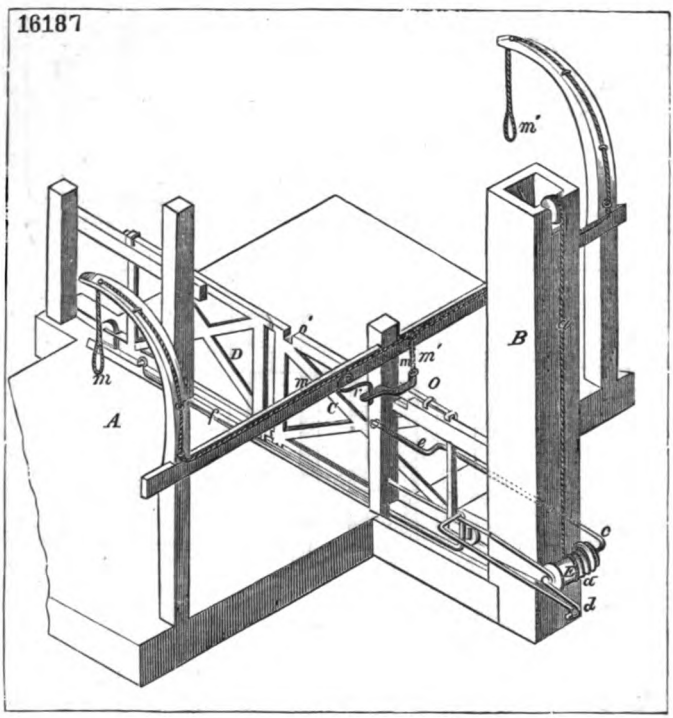

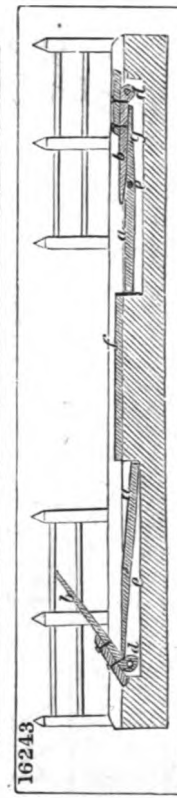

Digitized by Google

15213

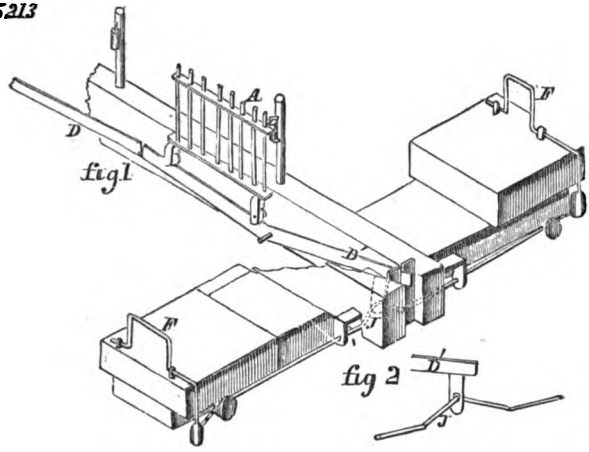

14987

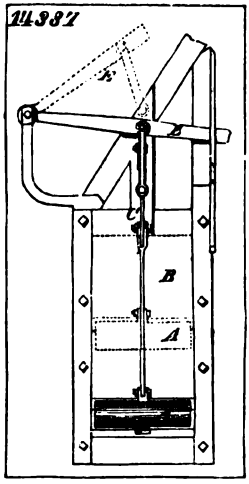

14689

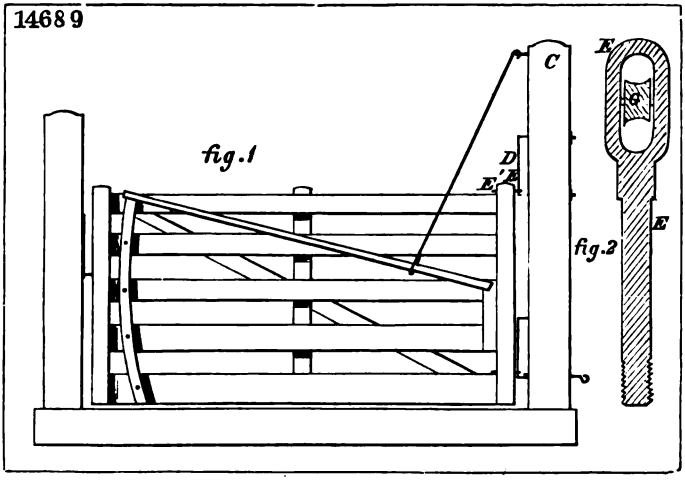

15881.

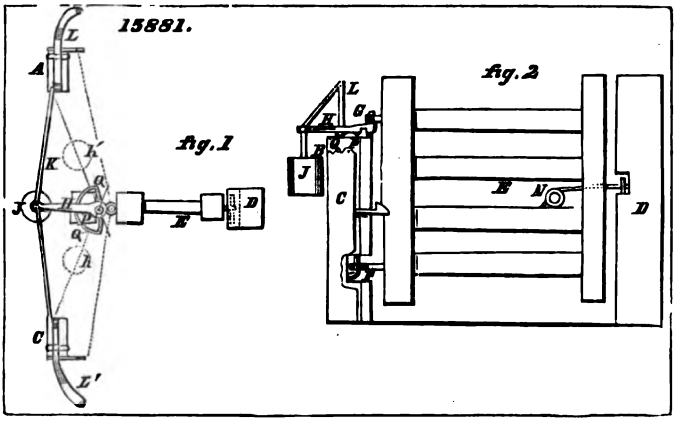

Digitized by Google

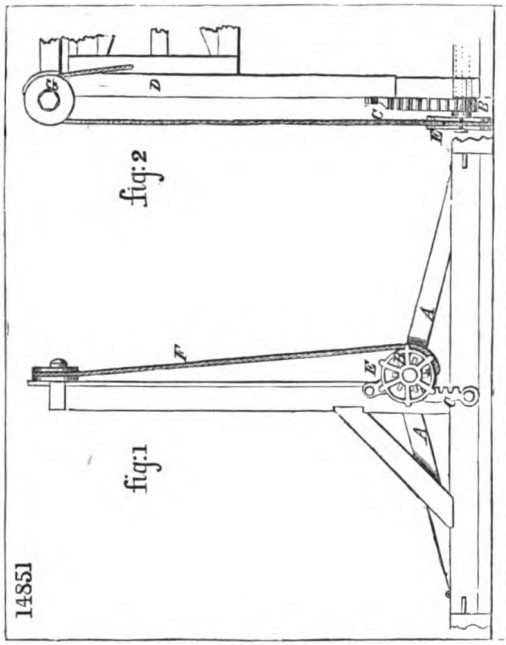

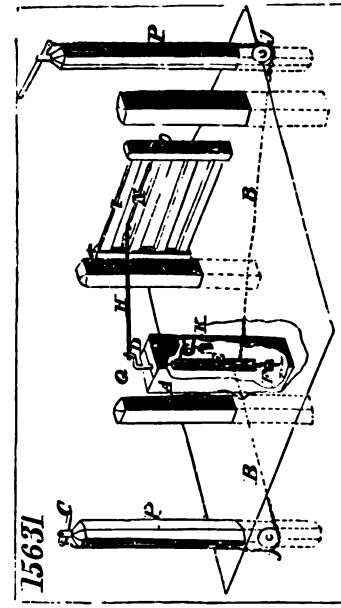

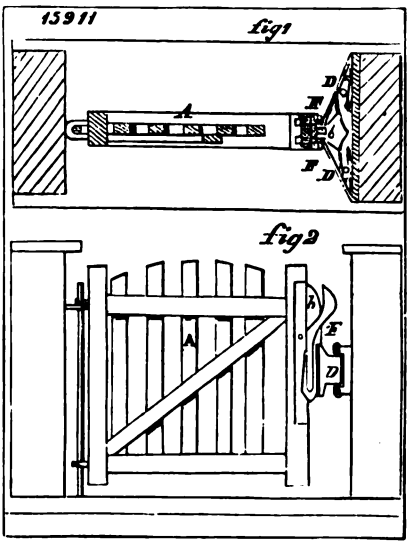

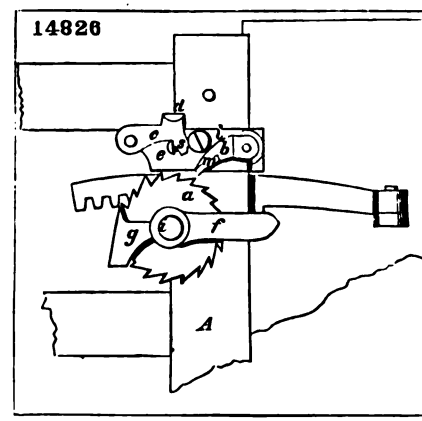

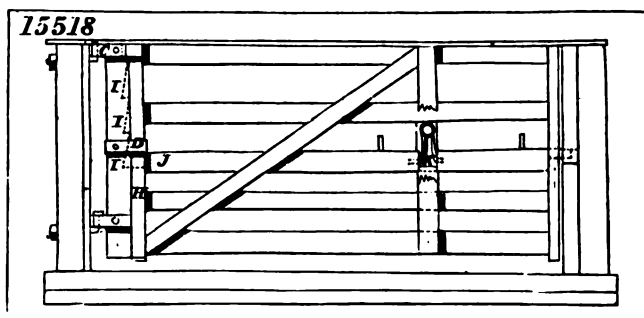

Digitized by Google

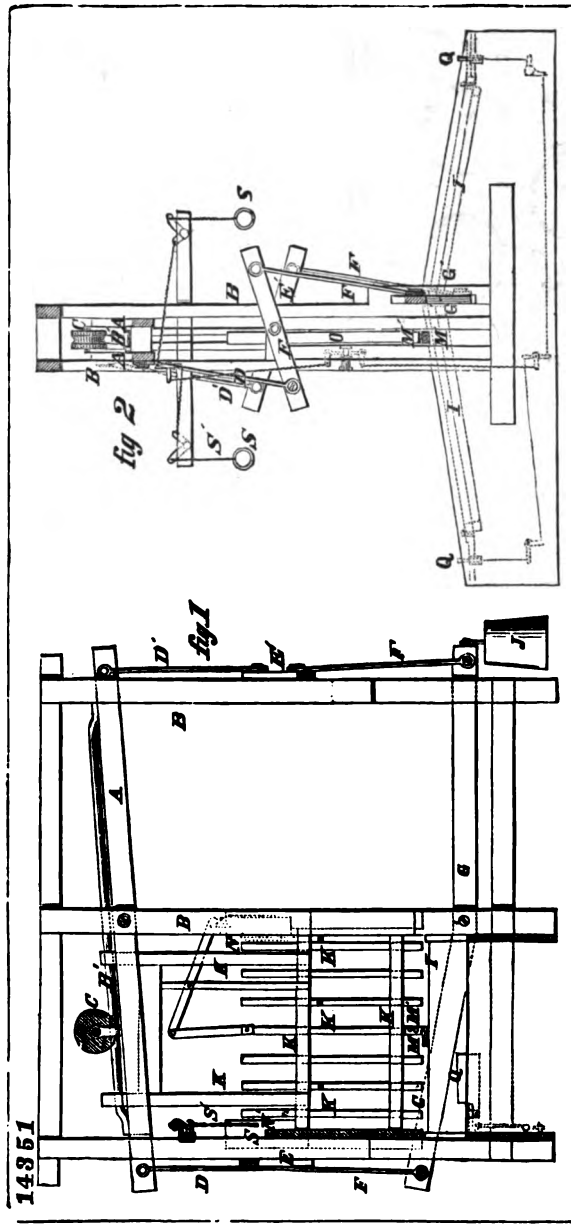

Digitized by Google

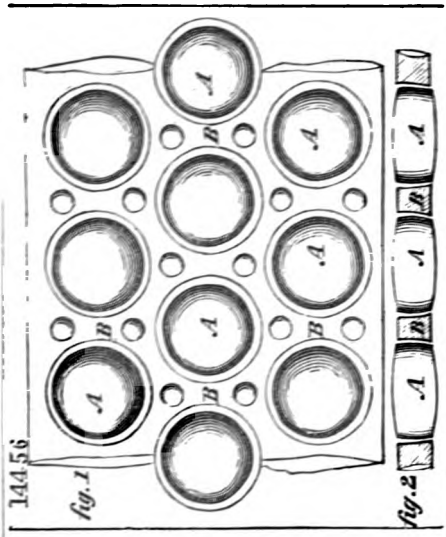

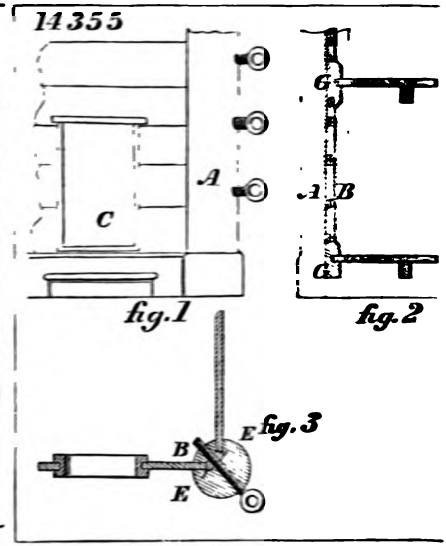

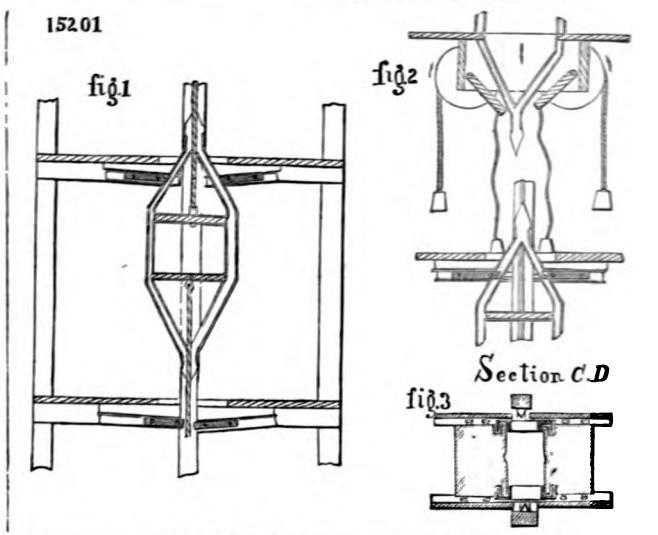

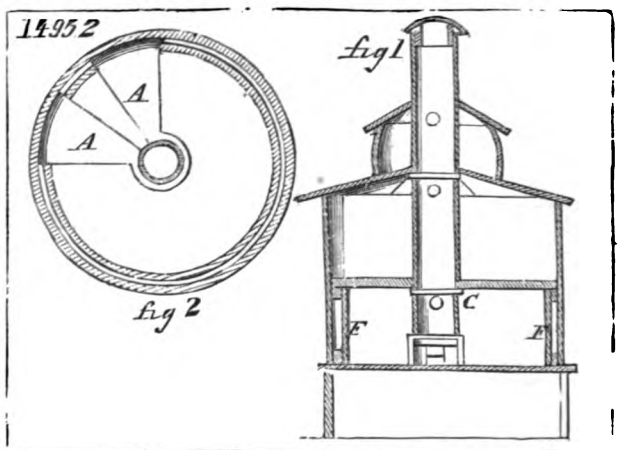

Digitized by Google

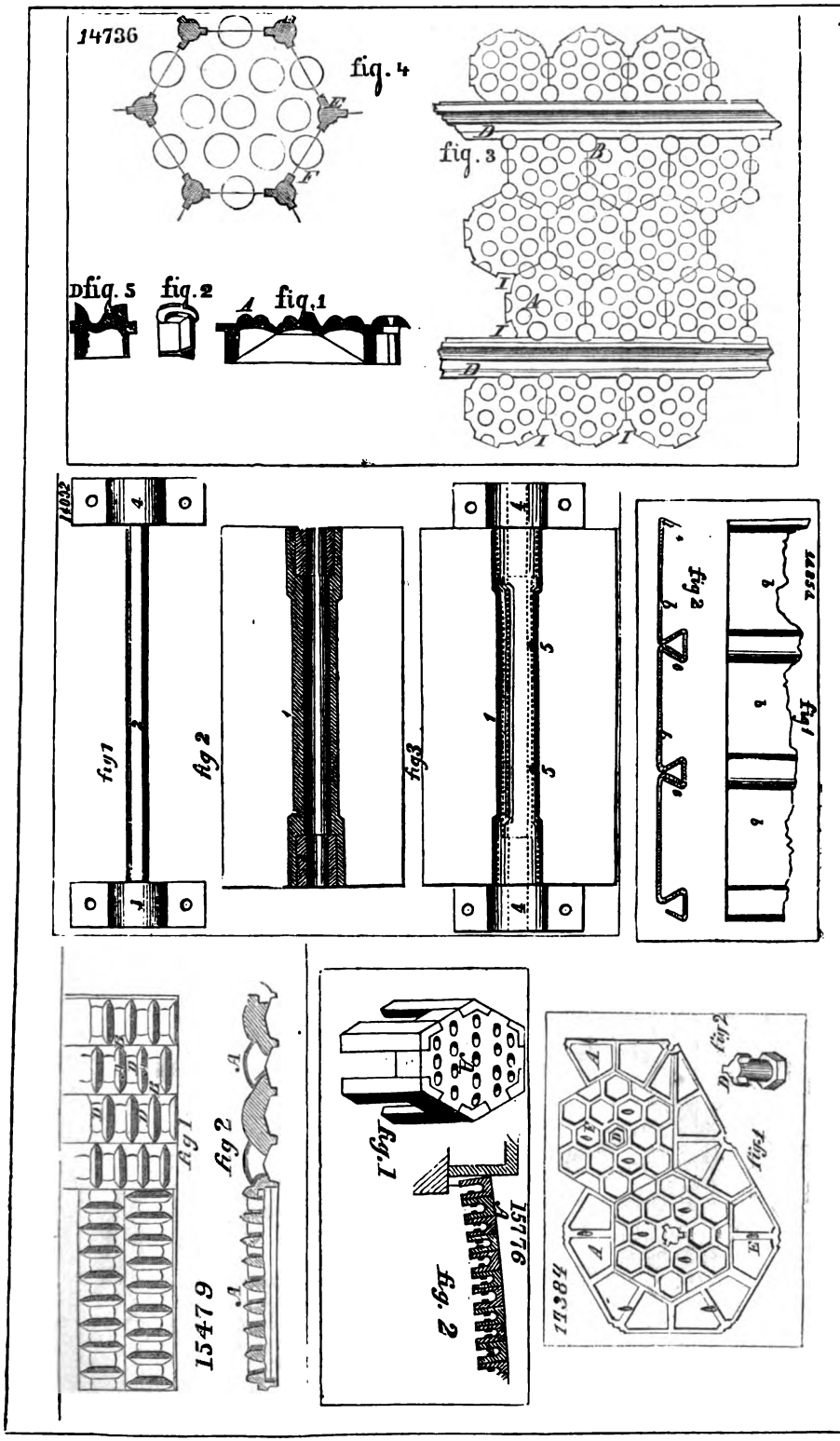

Digitized by Google

14054

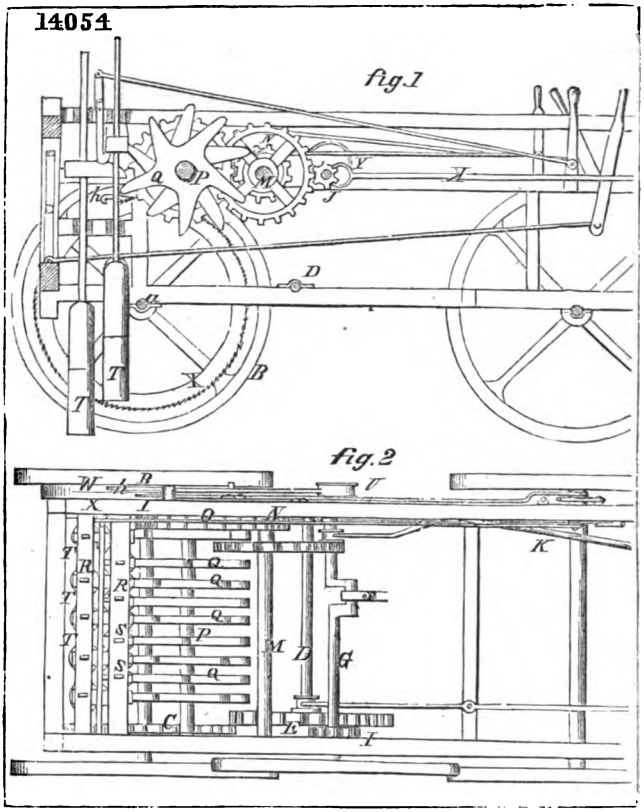

14716

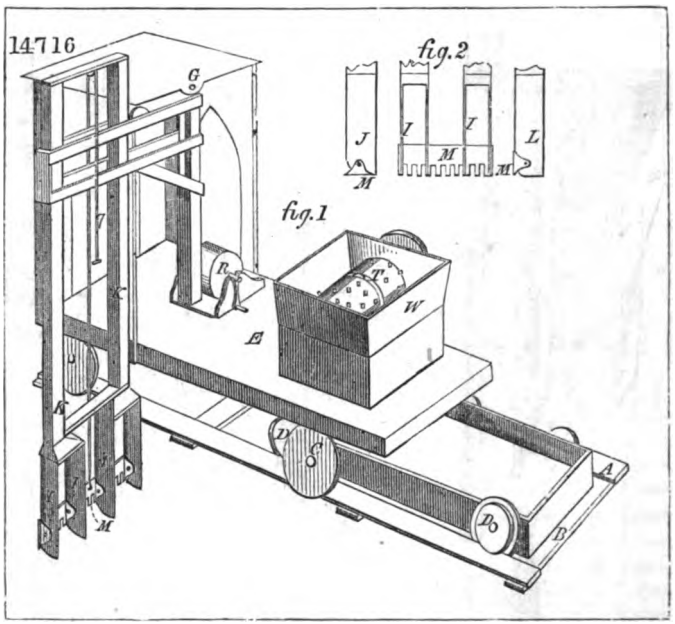

Digitized by Google

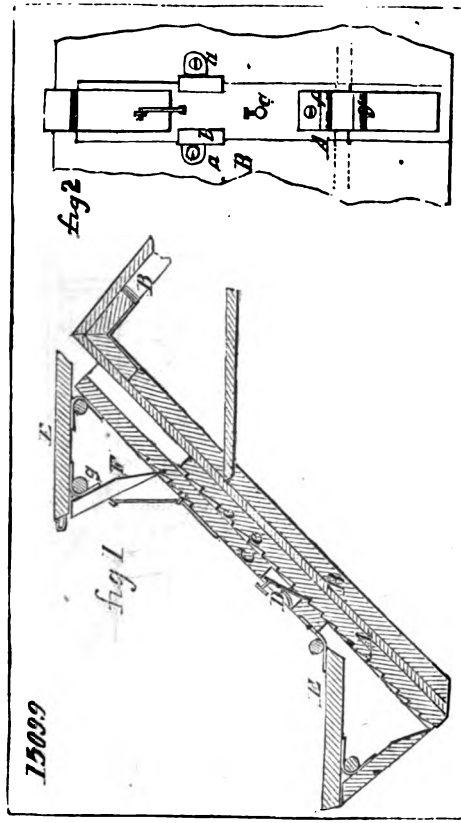

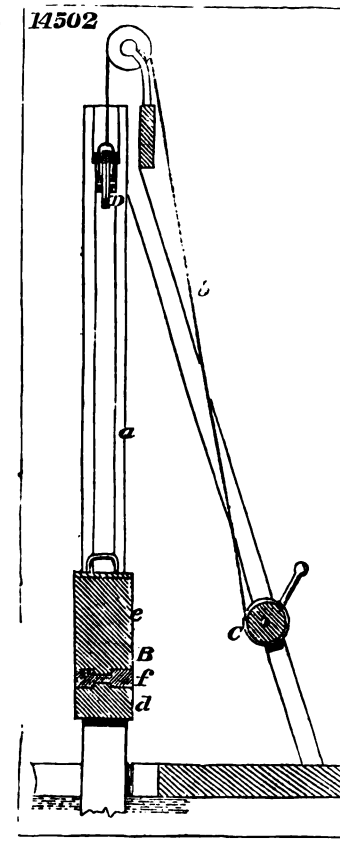

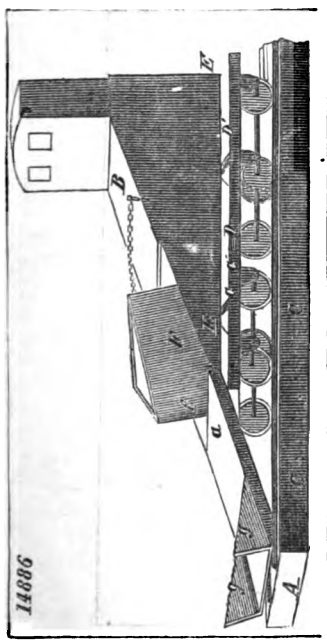

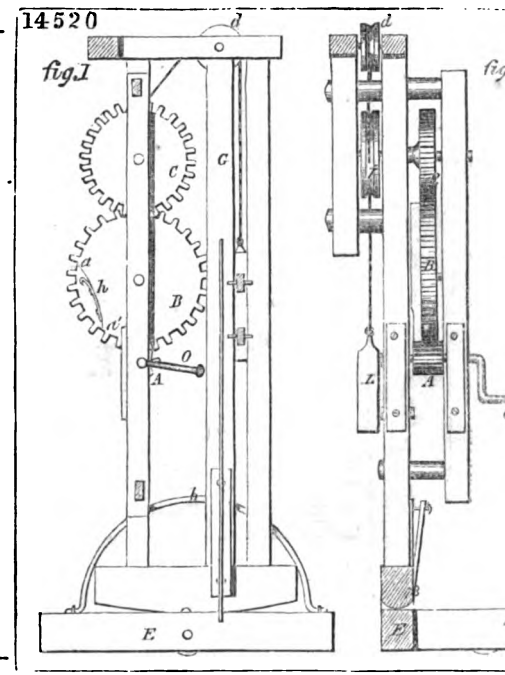

Digitized by Google

14870 fig. 1

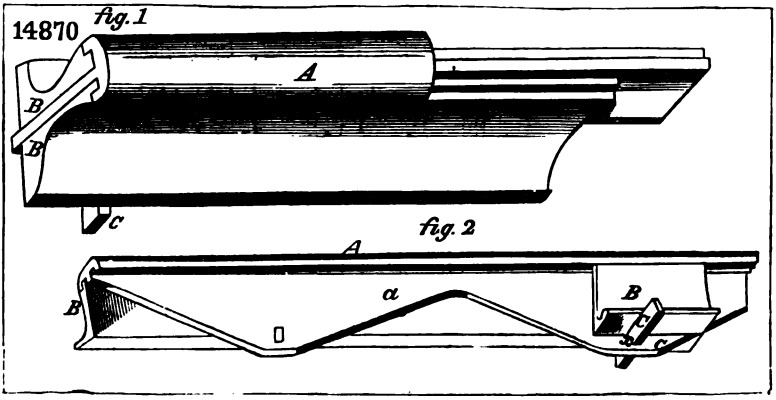

14809

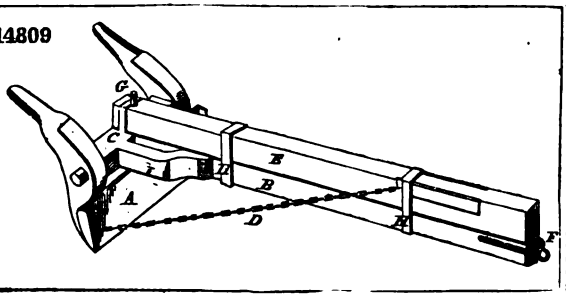

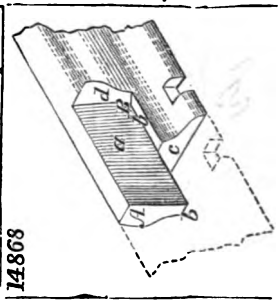

14868

14817

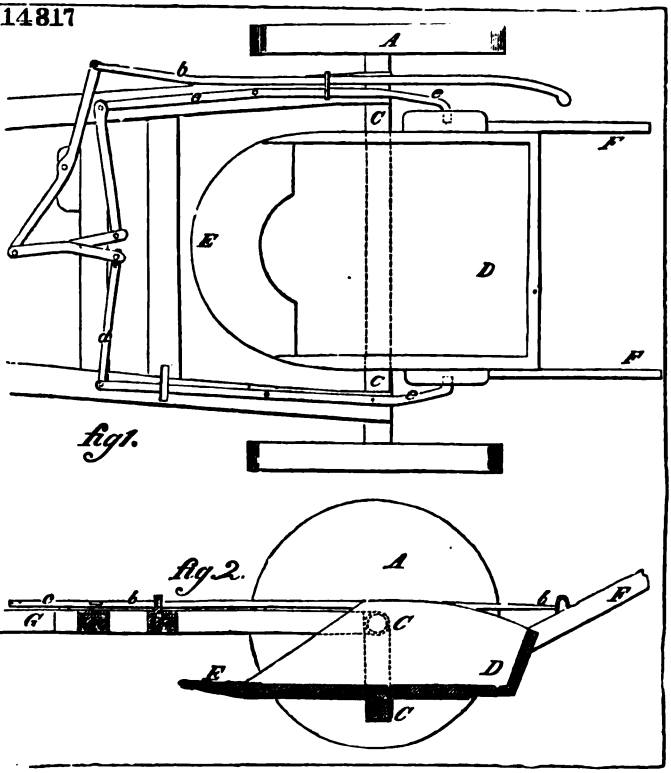

15988

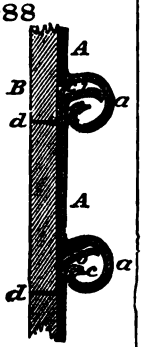

Digitized by Google

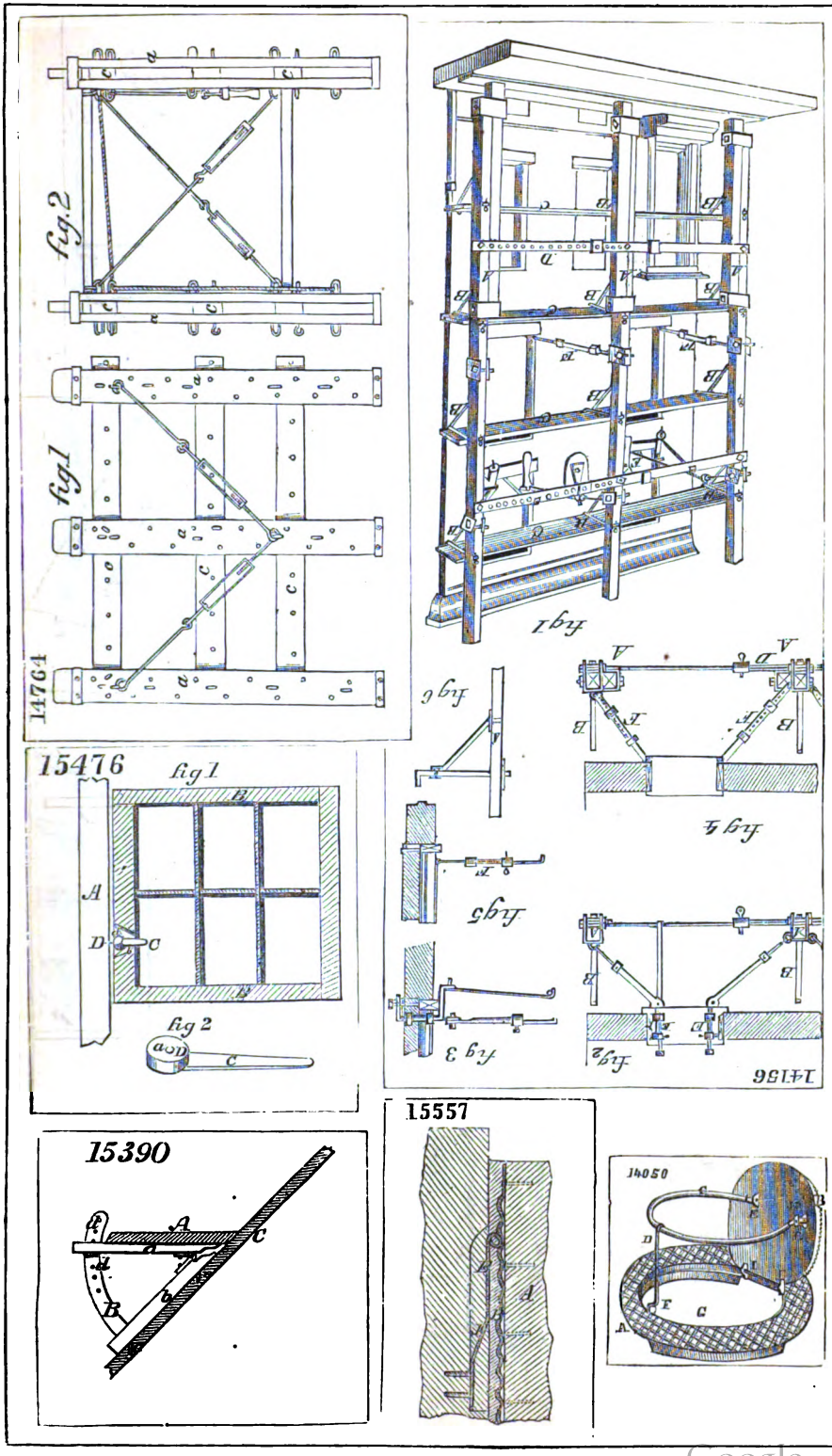

Digitized by Google

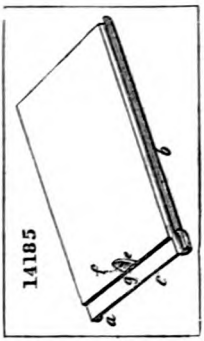

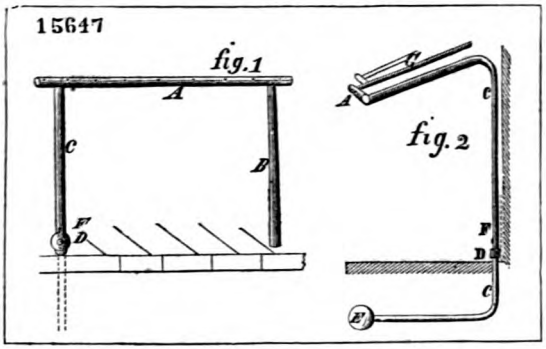

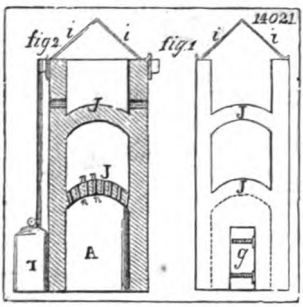

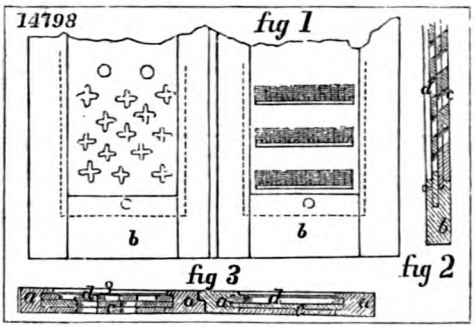

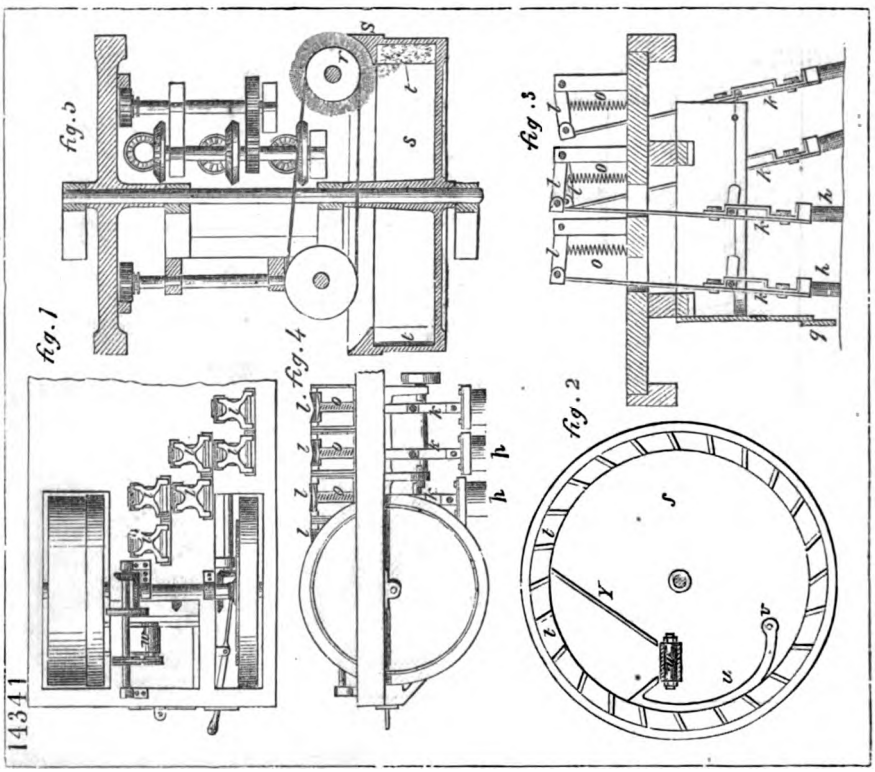

Digitized by Google

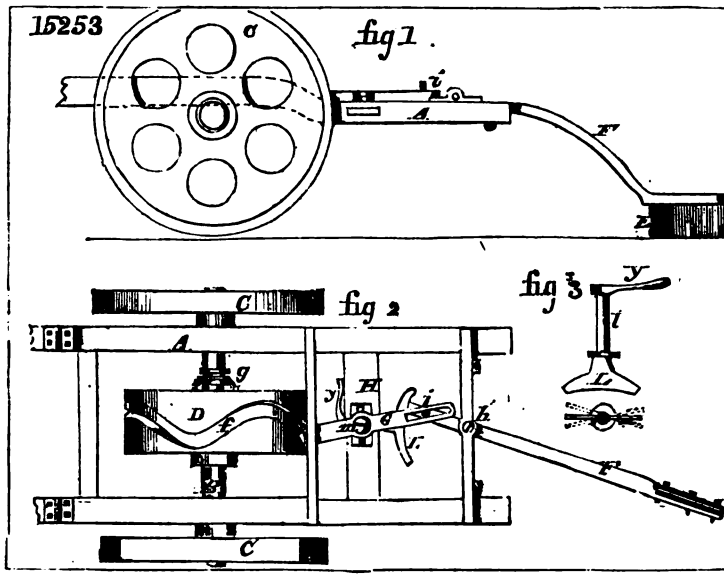

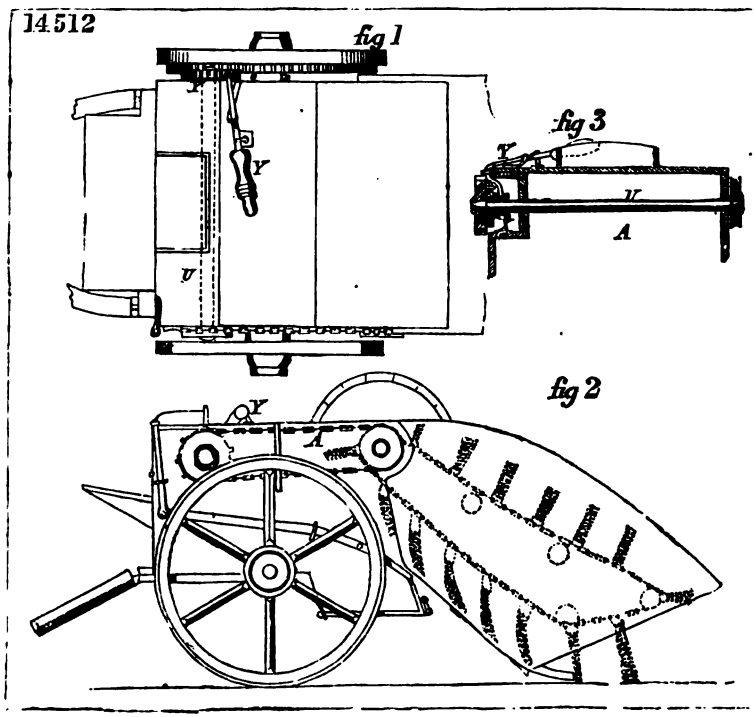

Digitized by Google

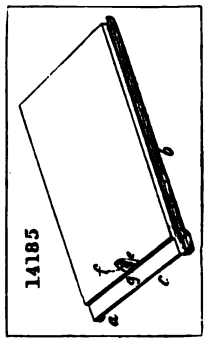

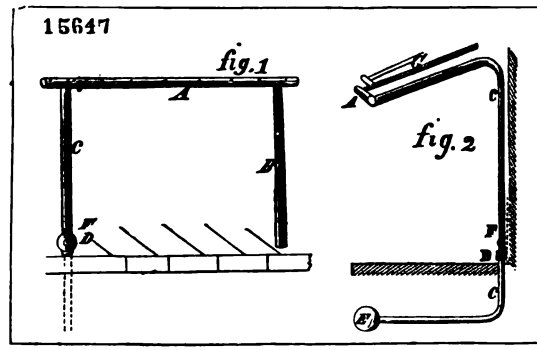

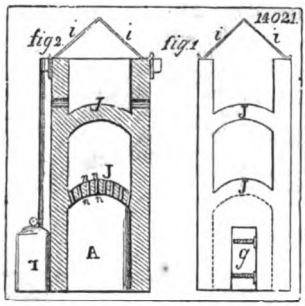

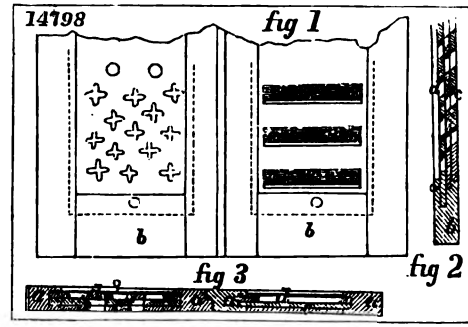

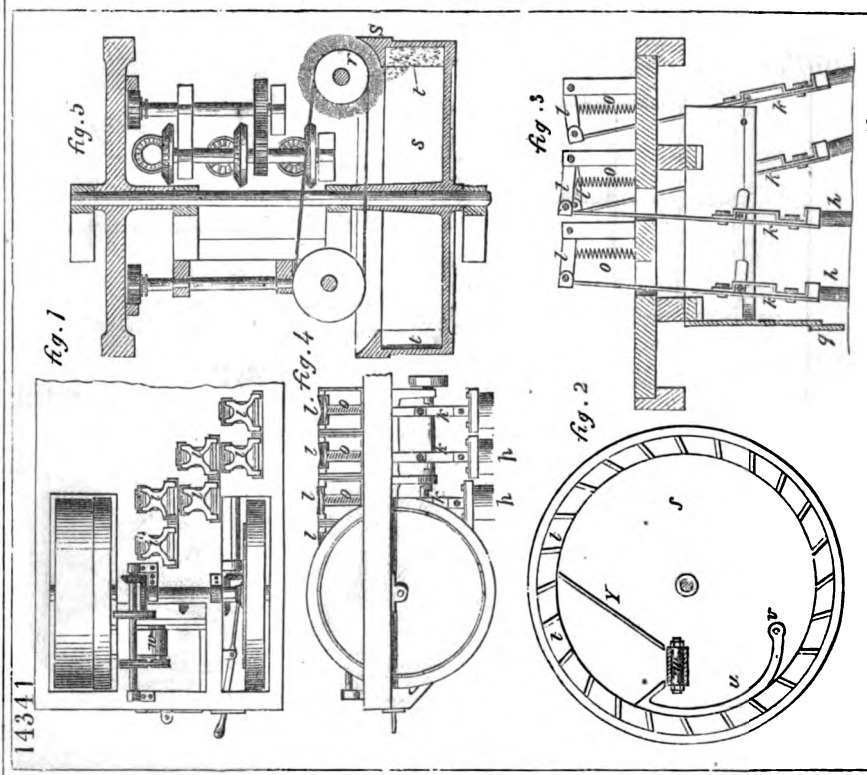

Digitized by Google

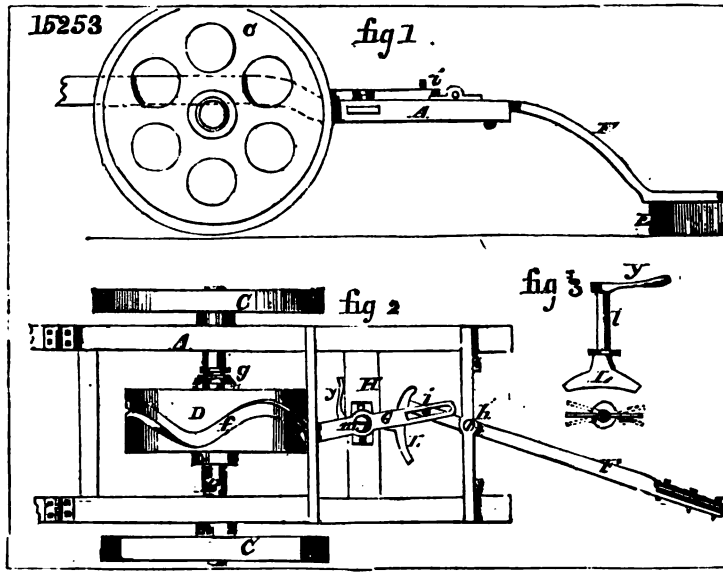

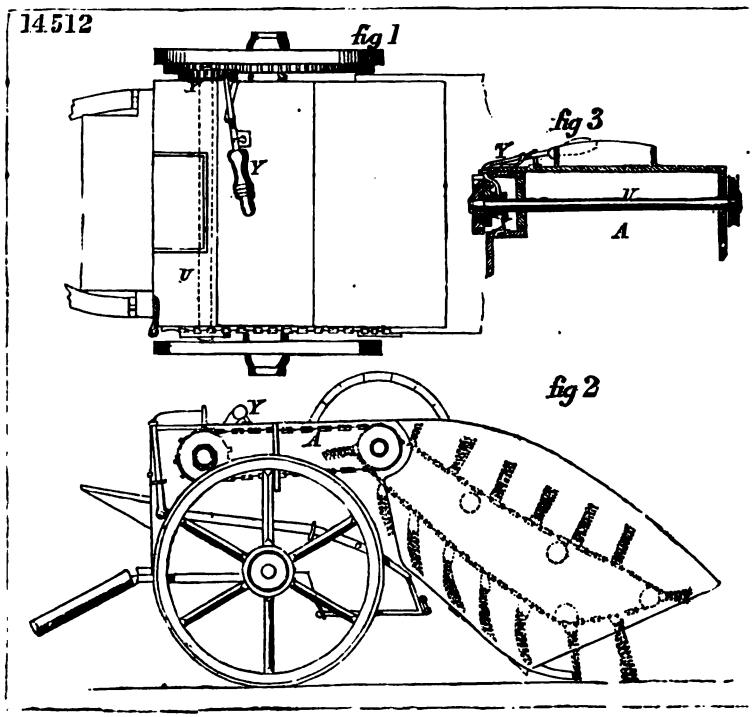

Digitized by Google

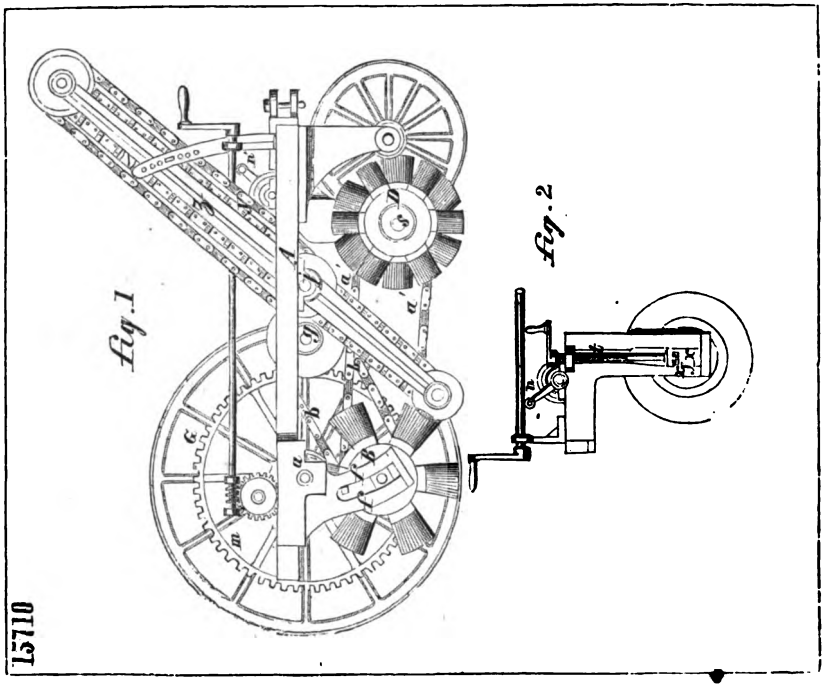

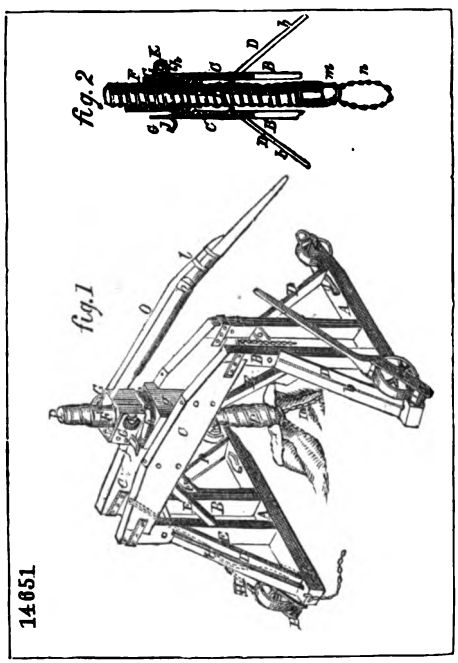

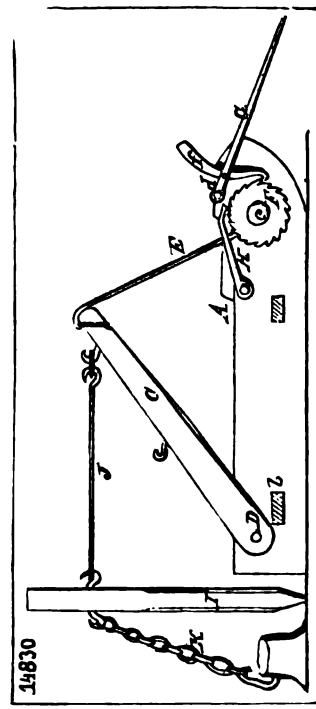

Digitized by Google

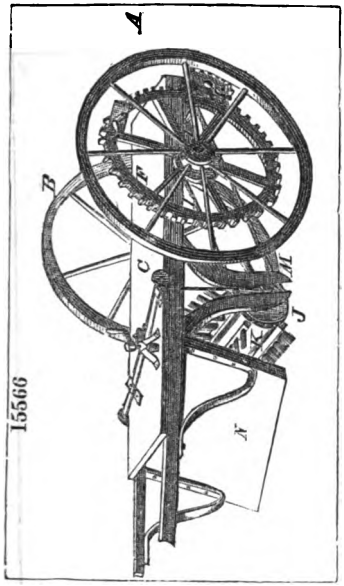

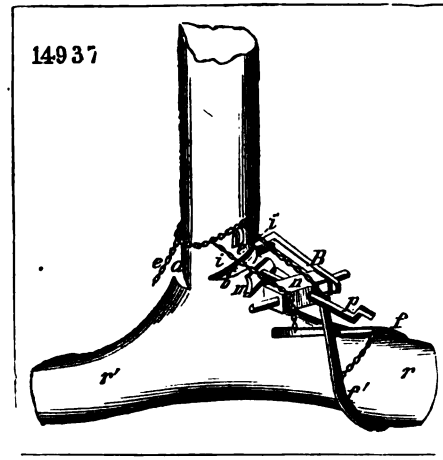

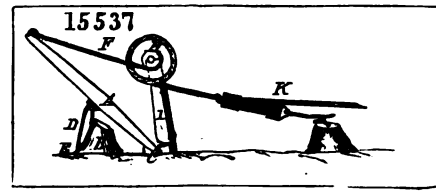

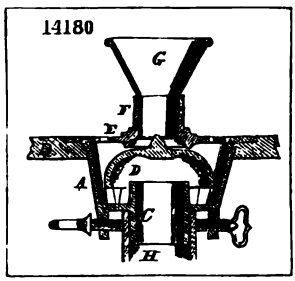

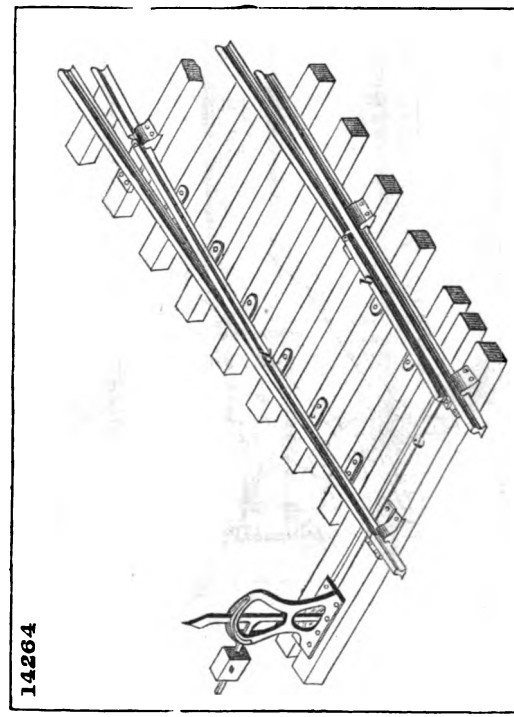

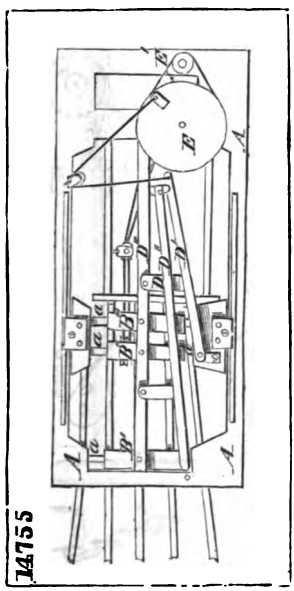

Digitized by Google

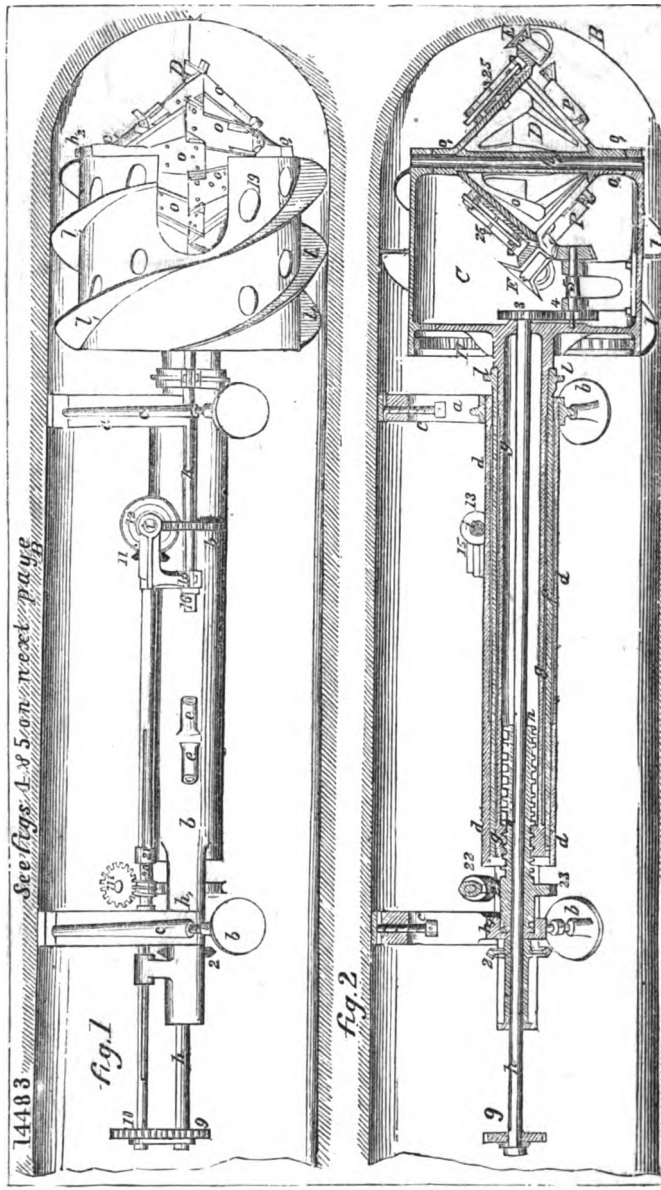

Digitized by Google

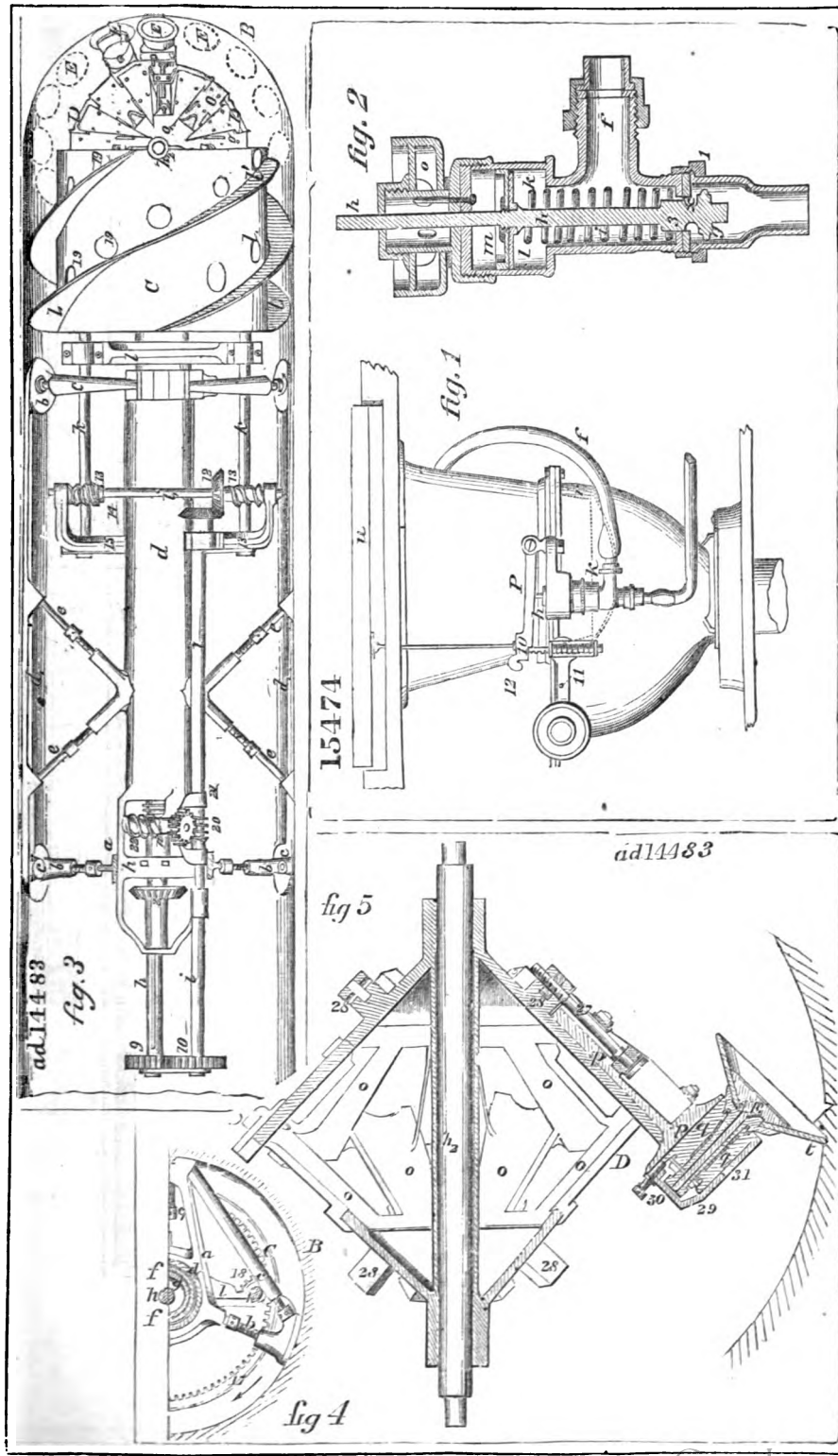

Digitized by Google

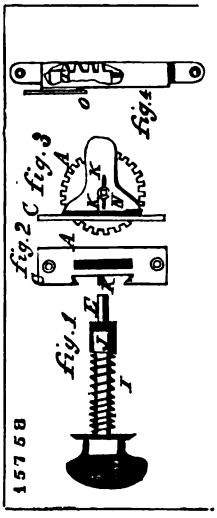

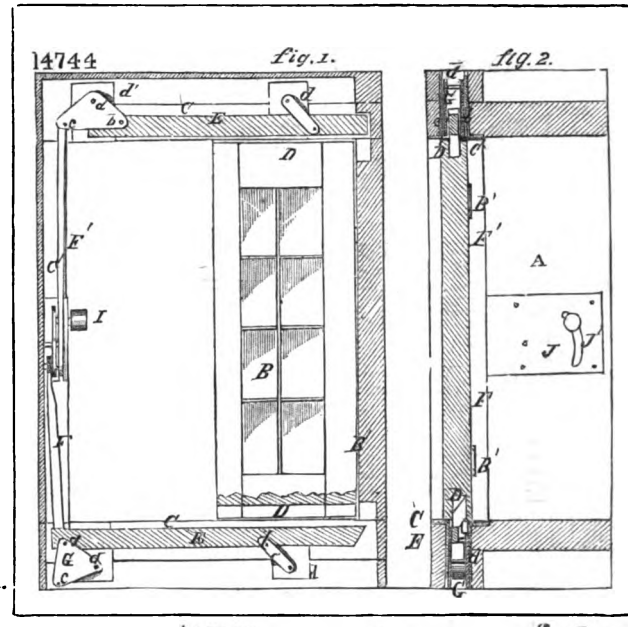

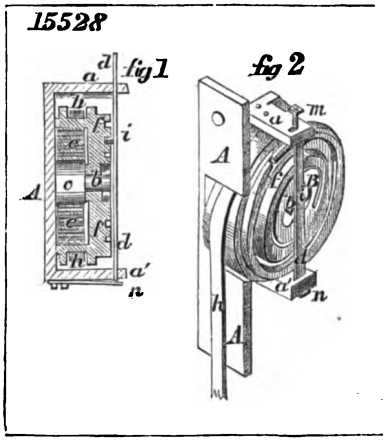

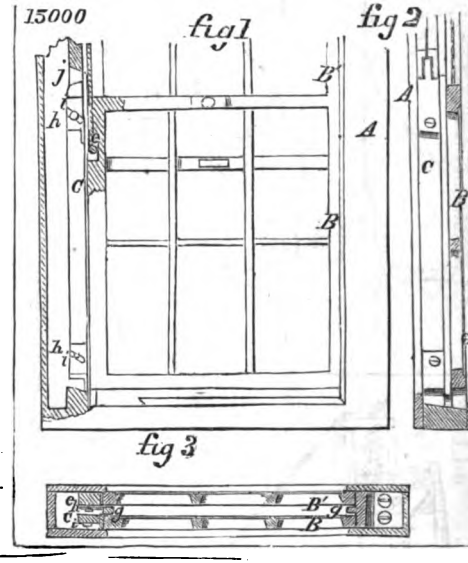

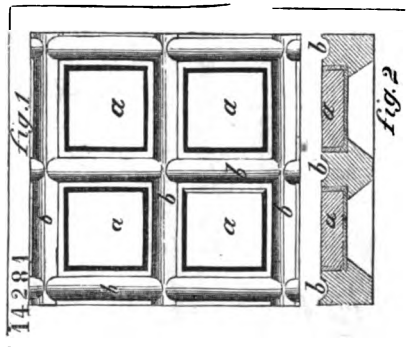

Digitized by Google

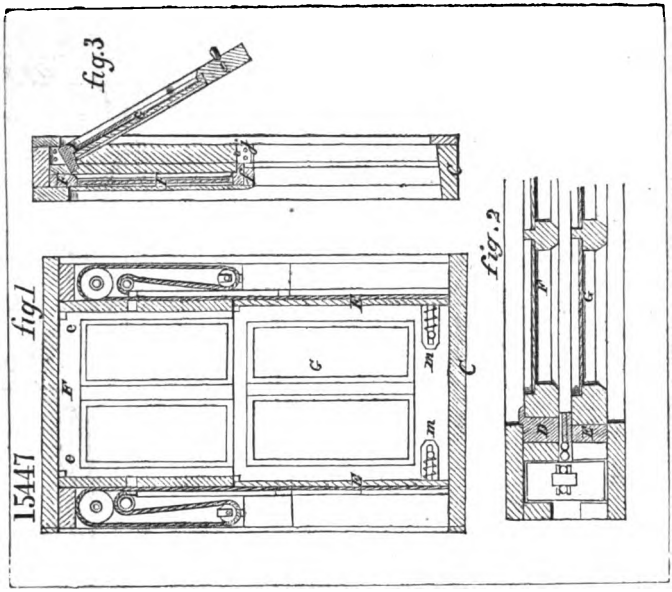

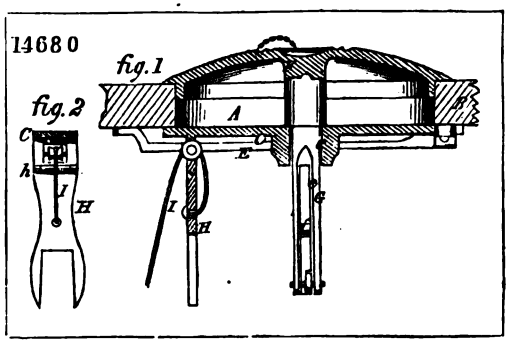

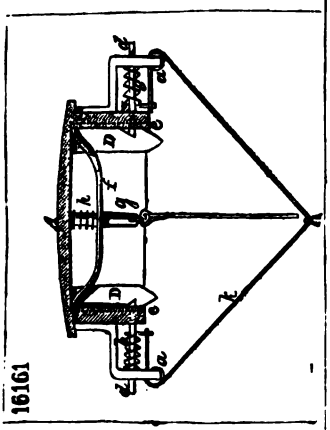

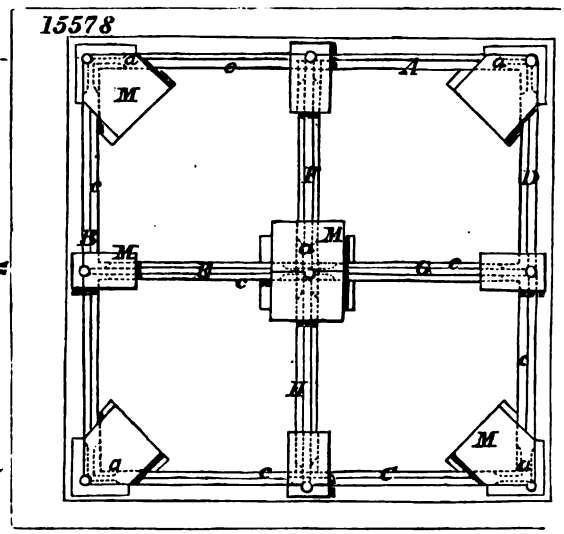

Digitized by Google

14953

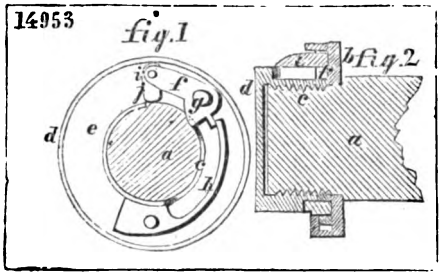

16113

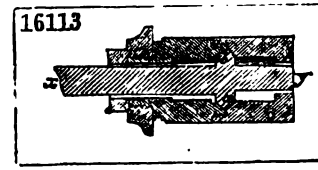

14579

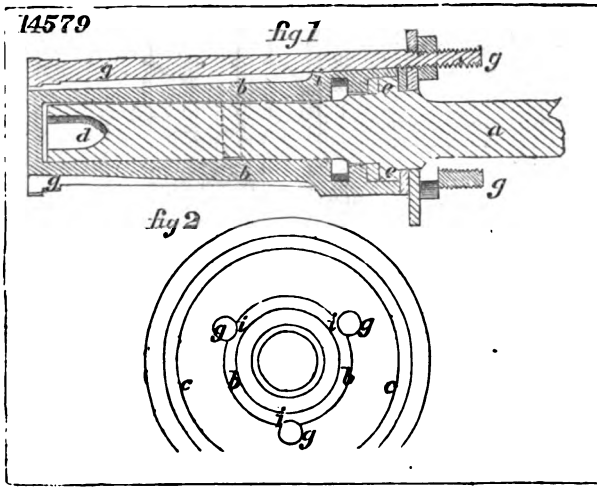

14415.

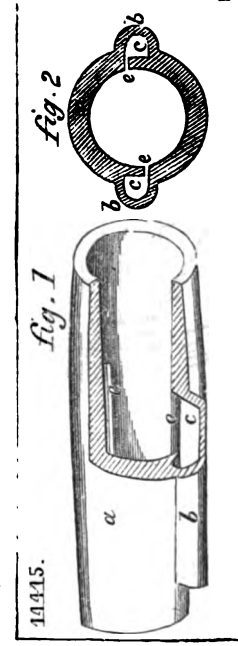

16099

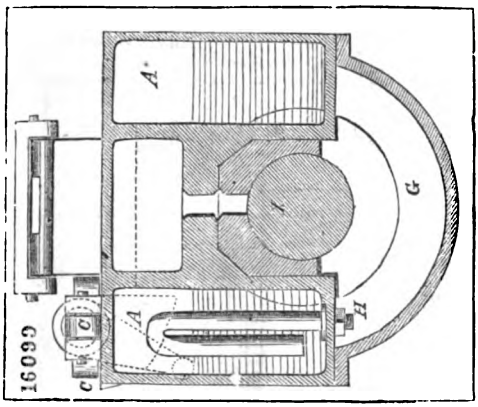

14315

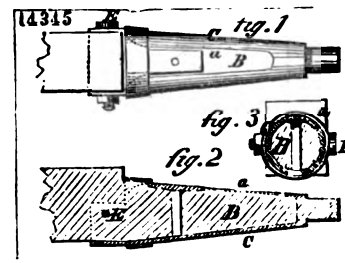

14232

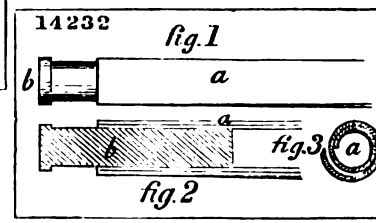

14639

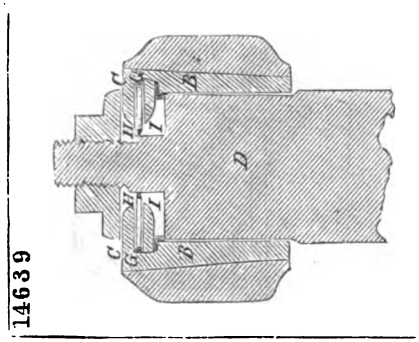

16153

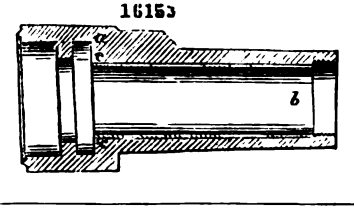

Digitized by Google

14747

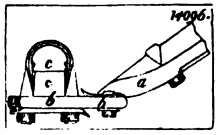

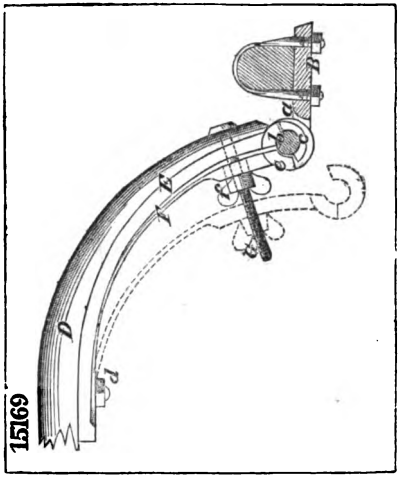

15169

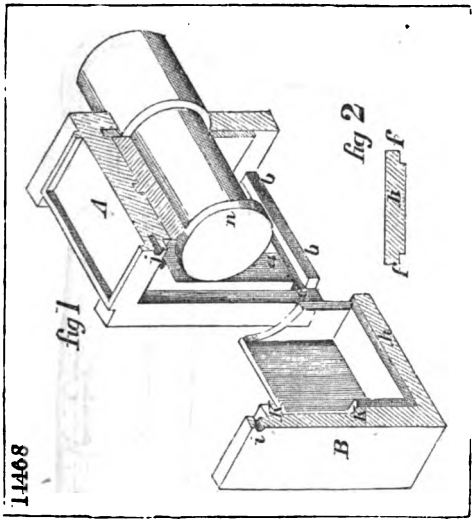

14468

14291

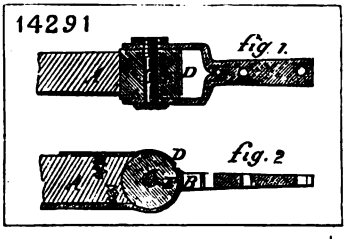

14560

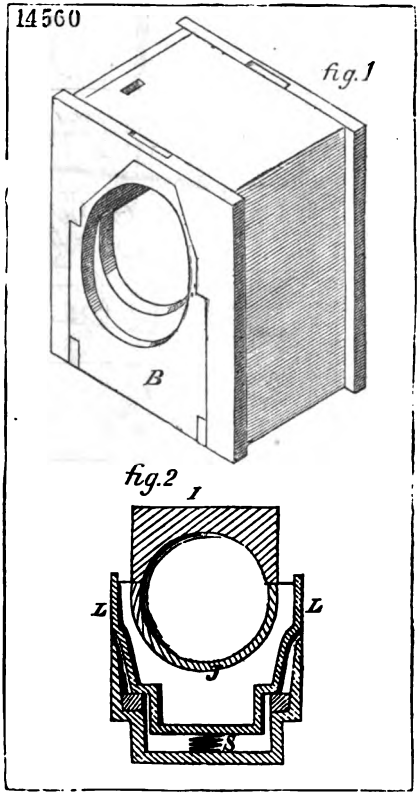

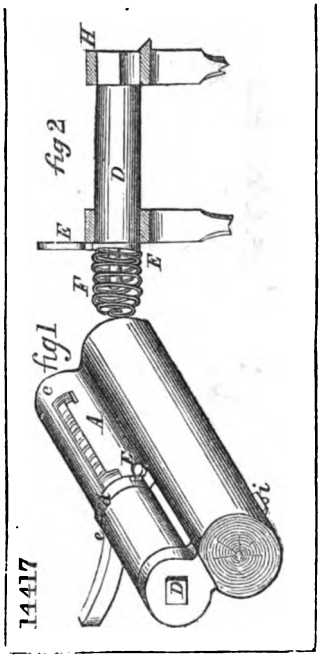

14417

Digitized by Google

14681

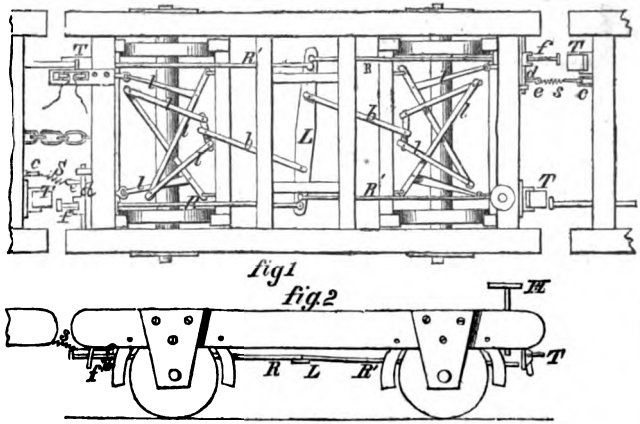

16294

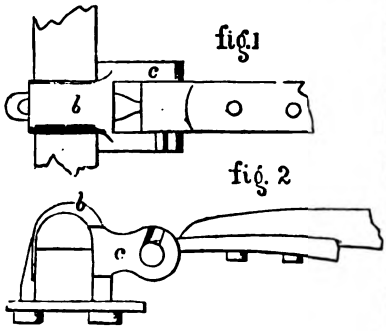

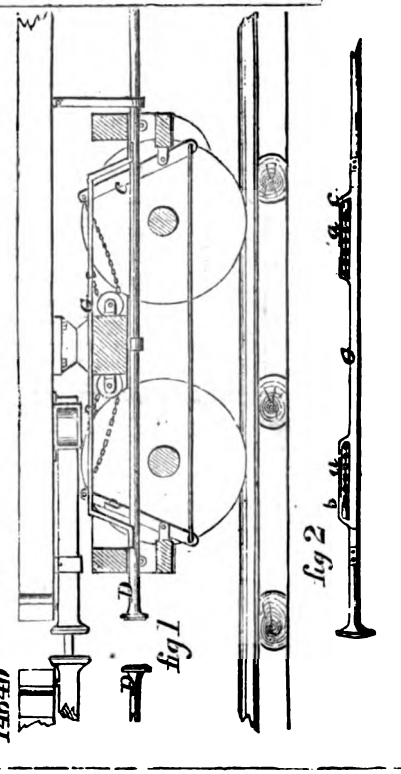

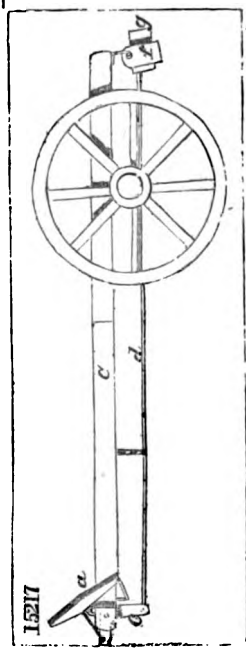

14385

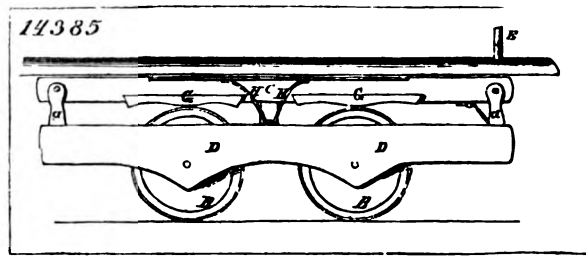

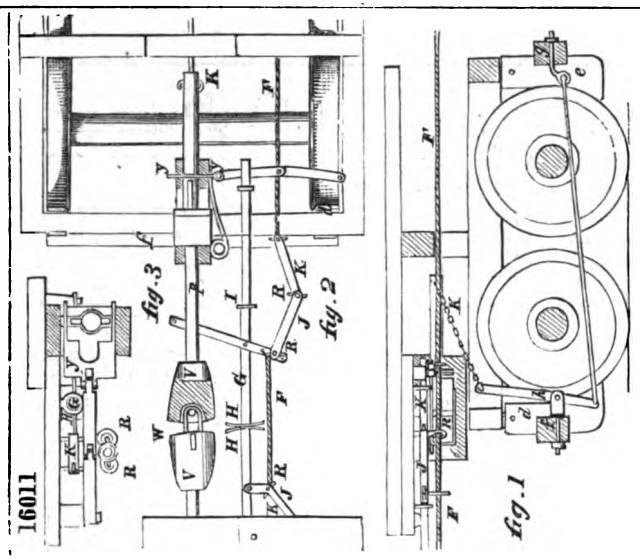

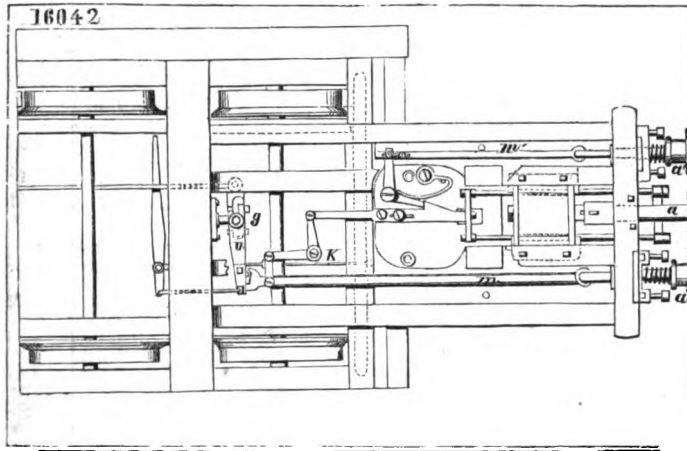

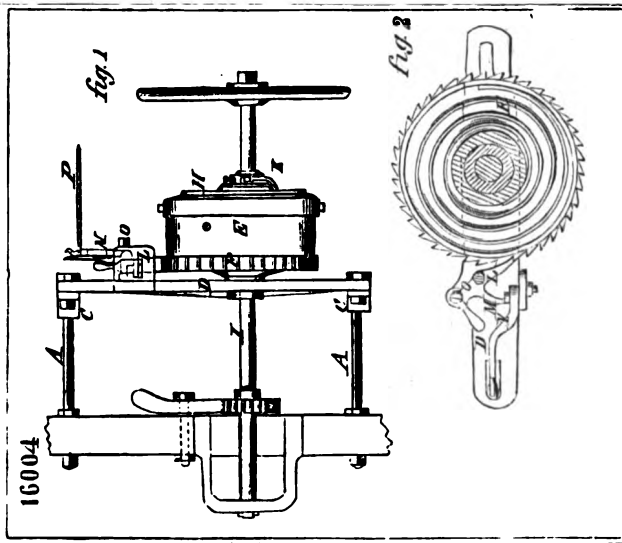

Digitized by Google

15038

fig.1

fig.2

14515

14766

fig.1

fig.2

Digitized by Google

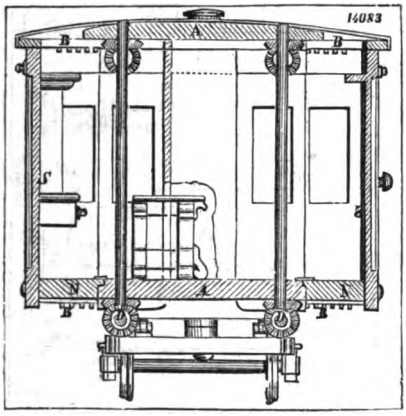

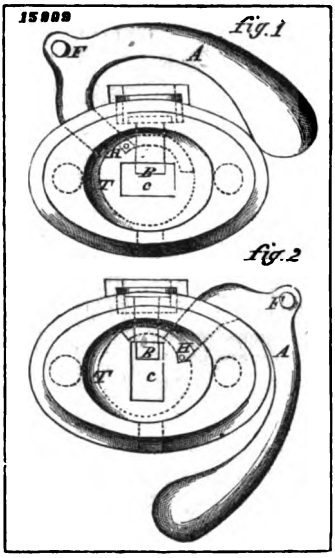

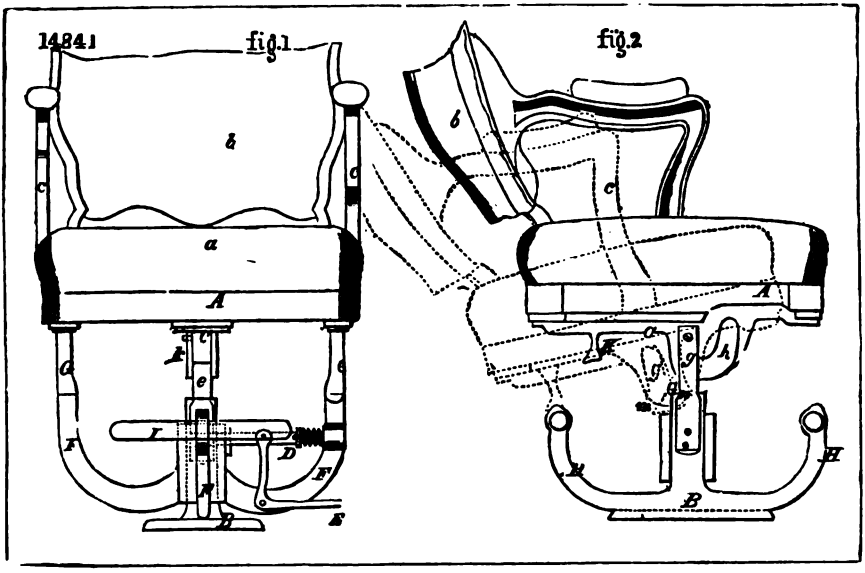

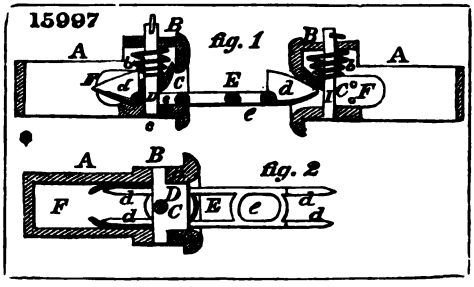

Digitized by Google

16160

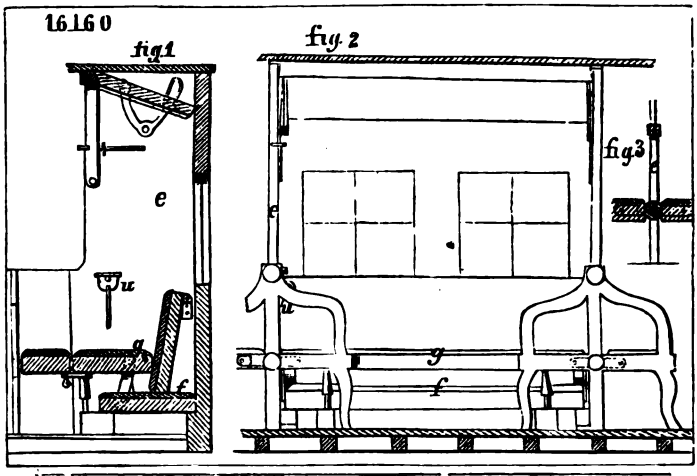

15233

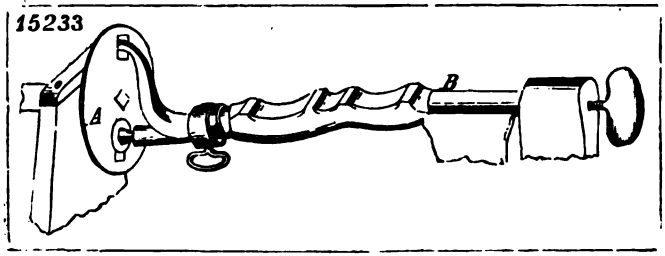

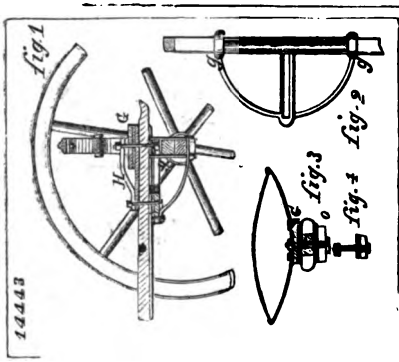

14231

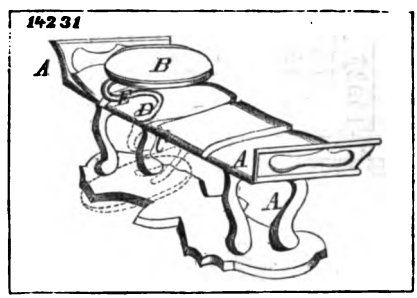

16159

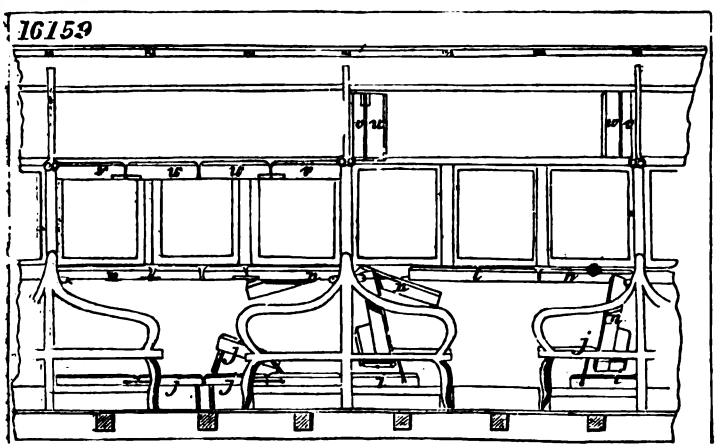

Digitized by Google

14395

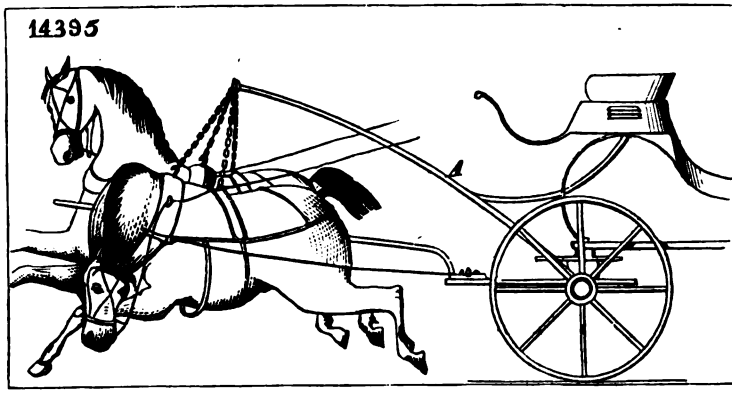

15923

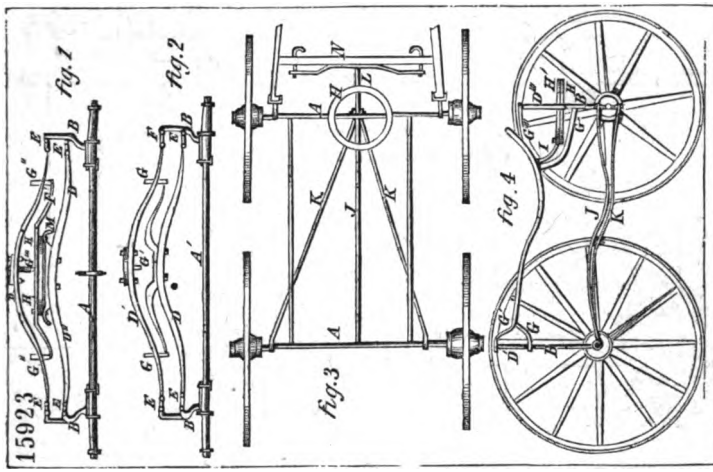

15345

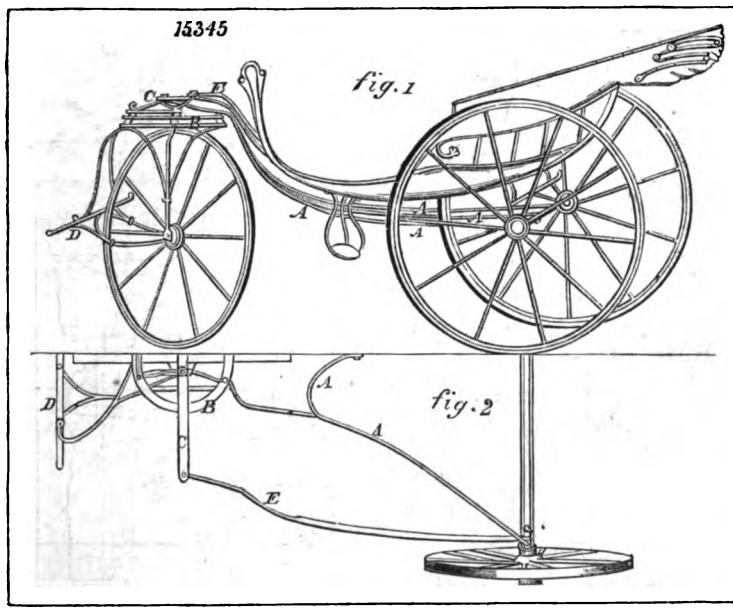

Digitized by Google

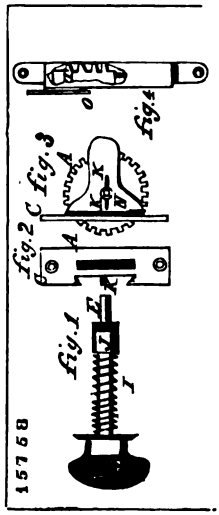

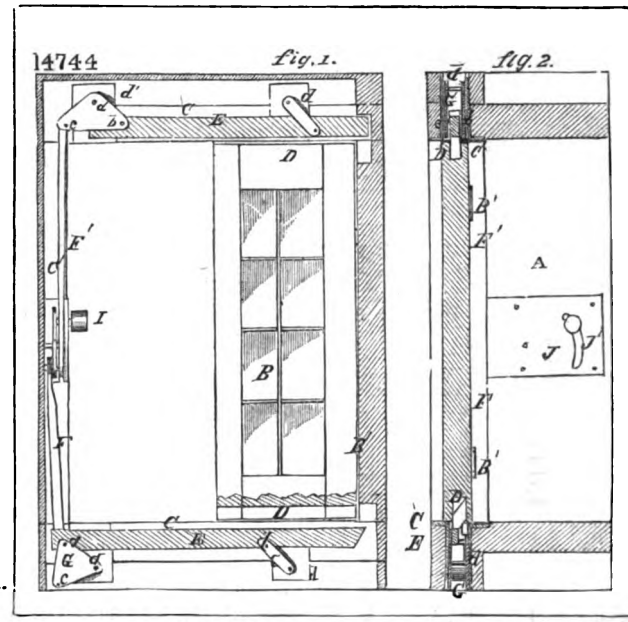

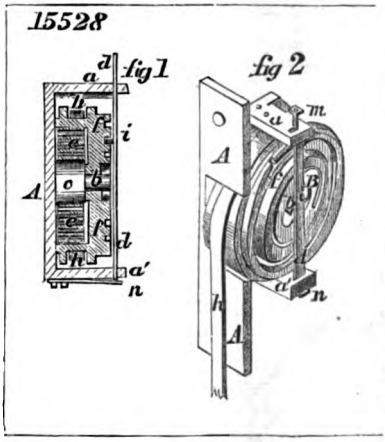

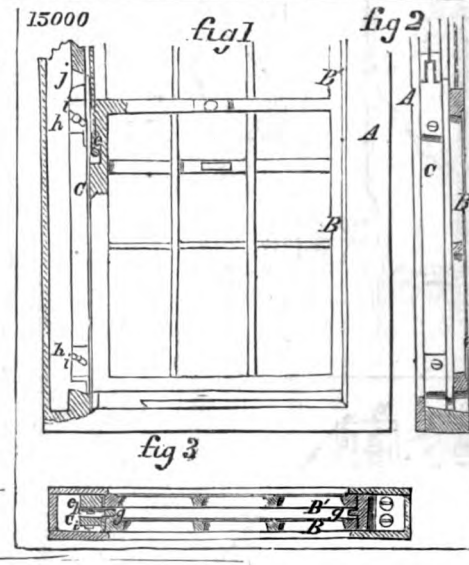

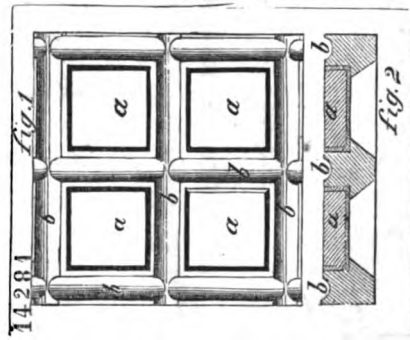

Digitized by Google

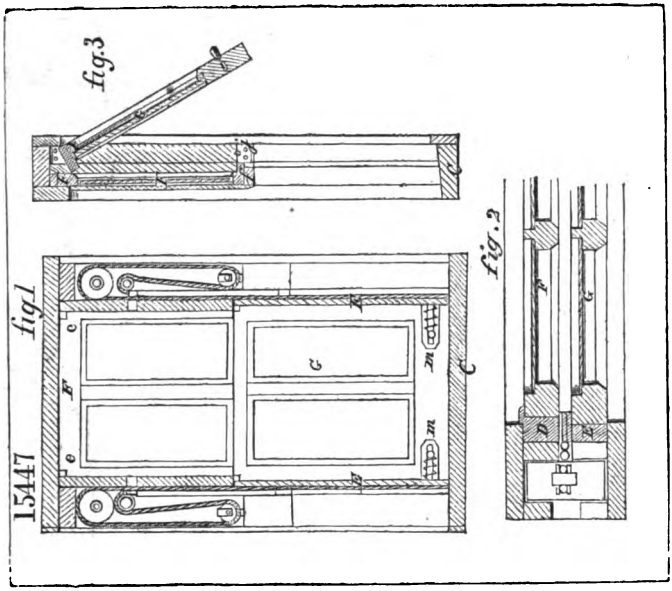

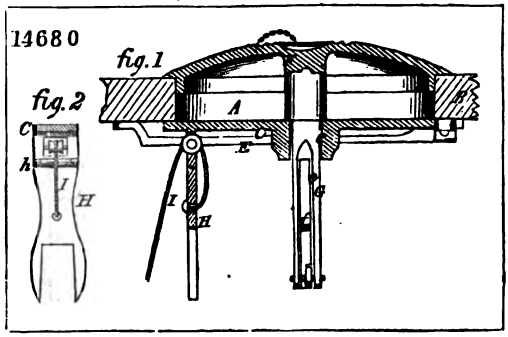

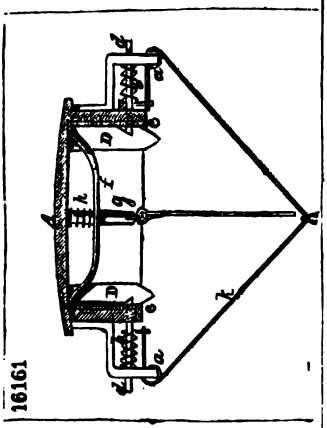

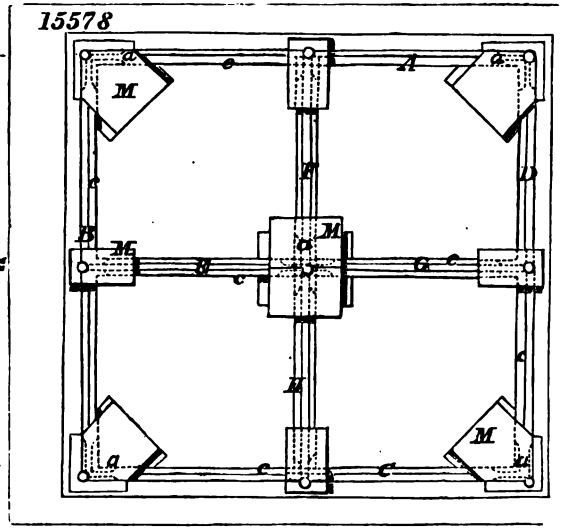

Digitized by Google

14953

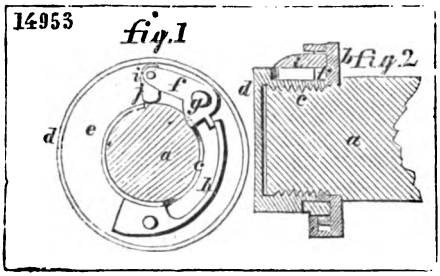

16113

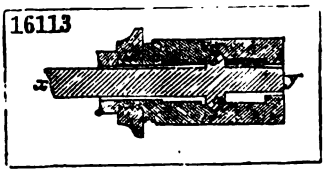

14579

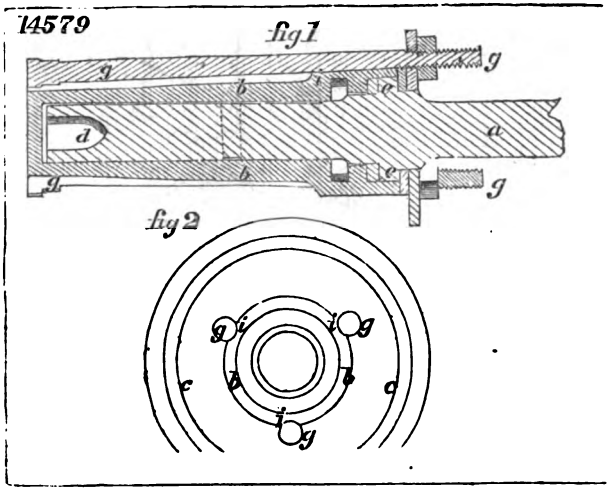

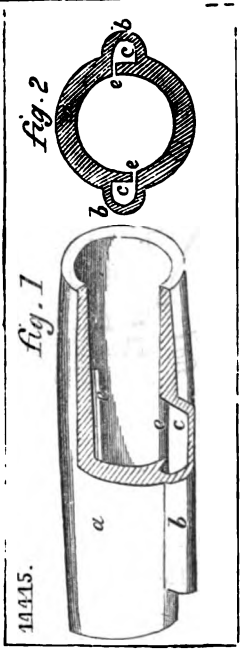

16099

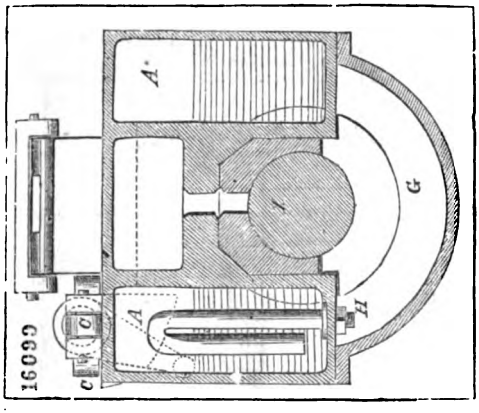

14345

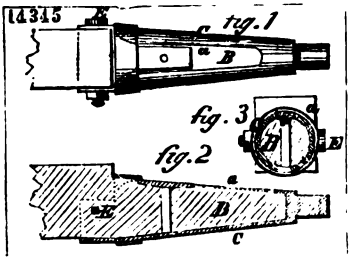

14232

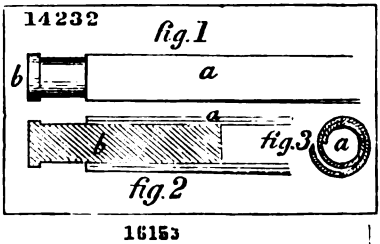

14639

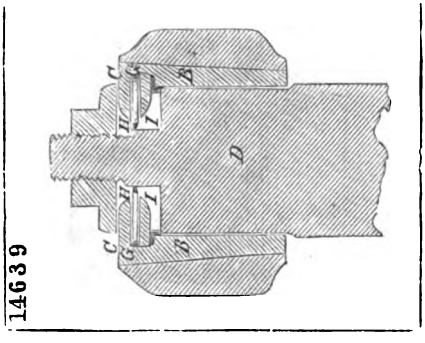

16153

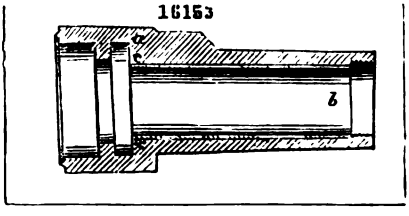

Digitized by Google

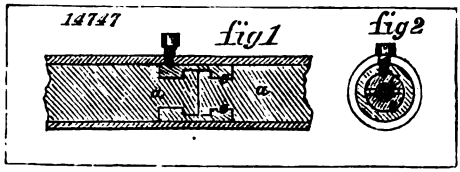

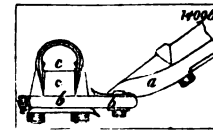

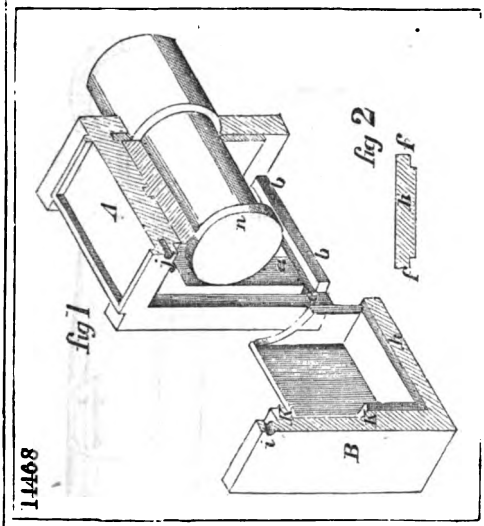

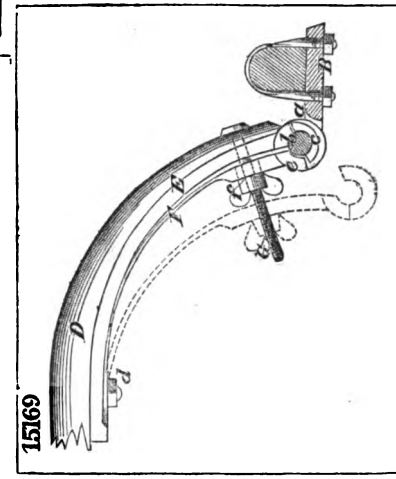

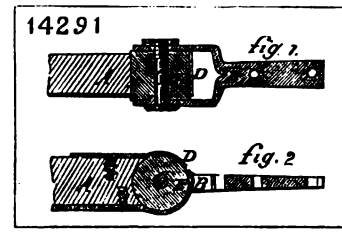

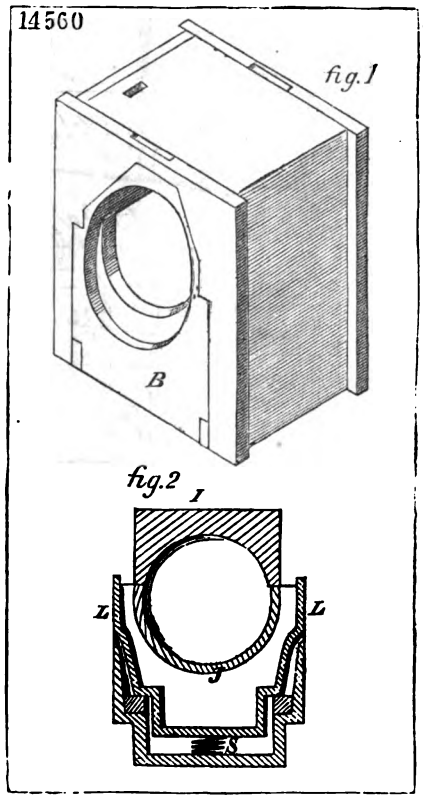

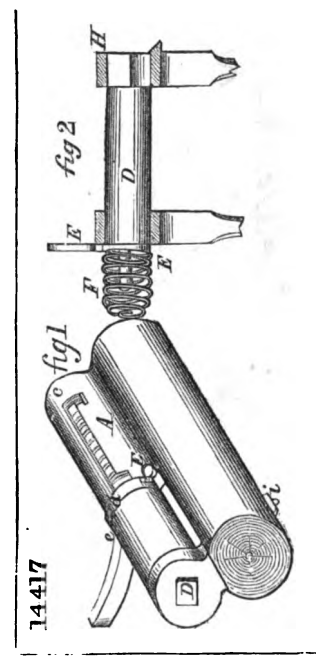

Digitized by Google

14681

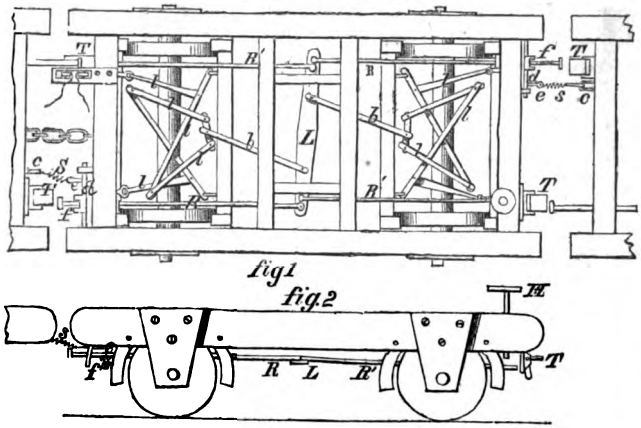

16294

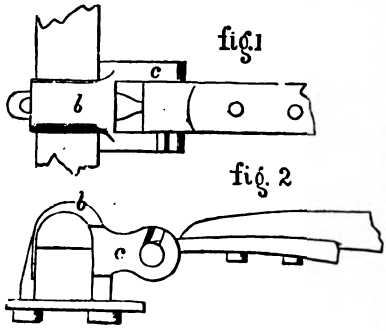

14741

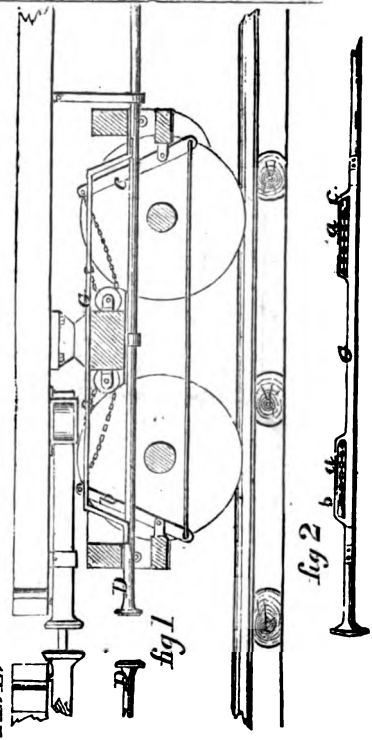

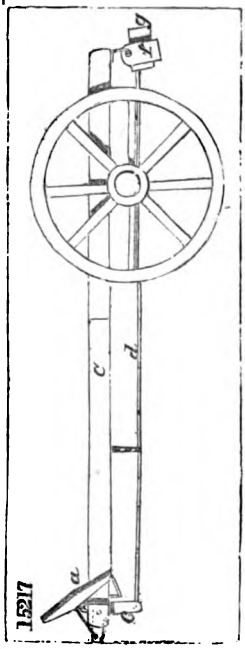

14385

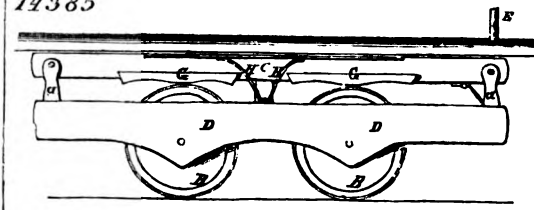

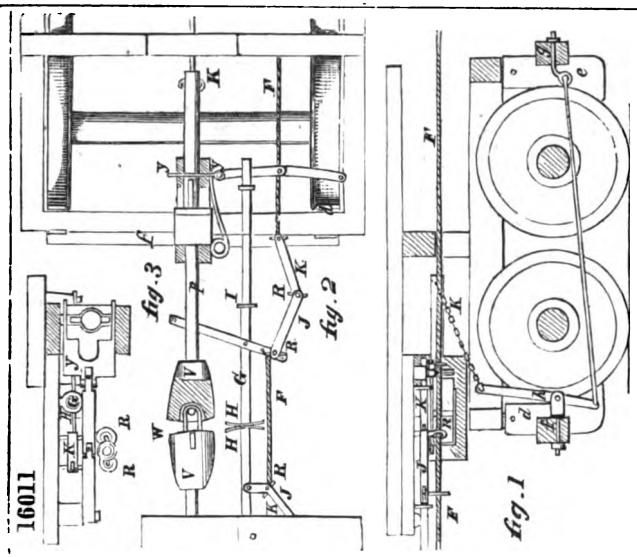

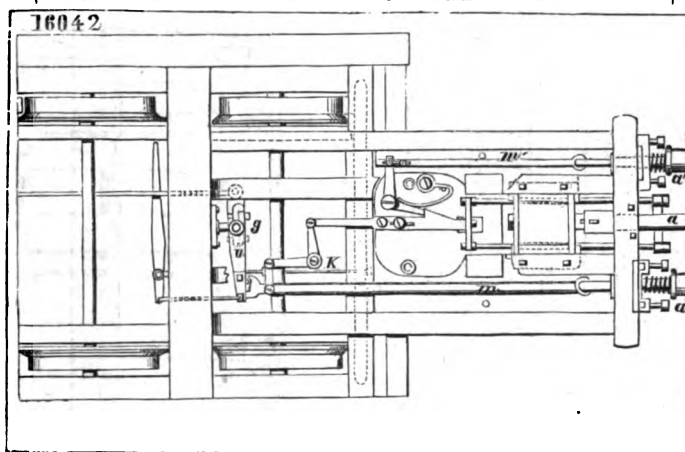

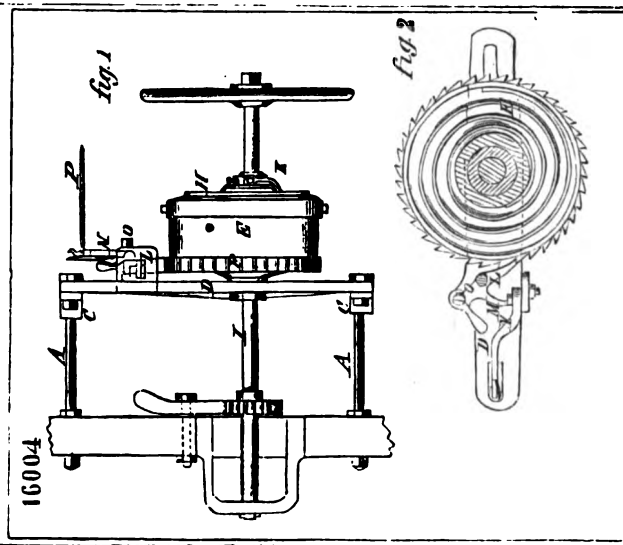

Digitized by Google

15038

fig.1

fig.2

14515

14766

fig.1

fig.2

Digitized by Google

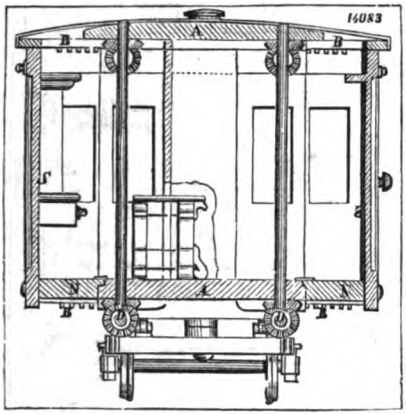

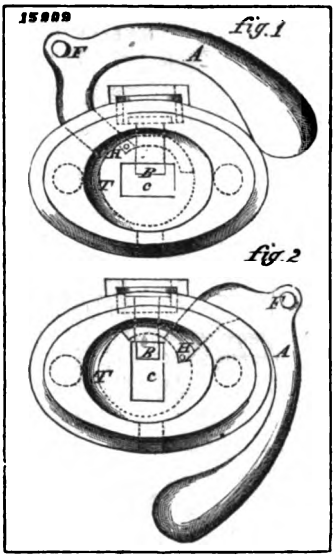

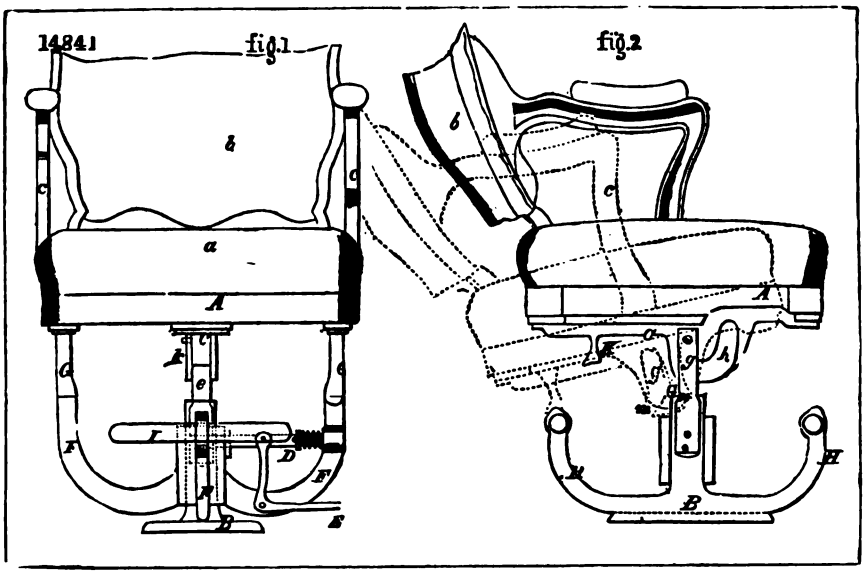

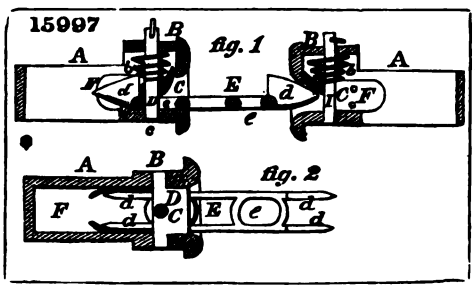

Digitized by Google

16160

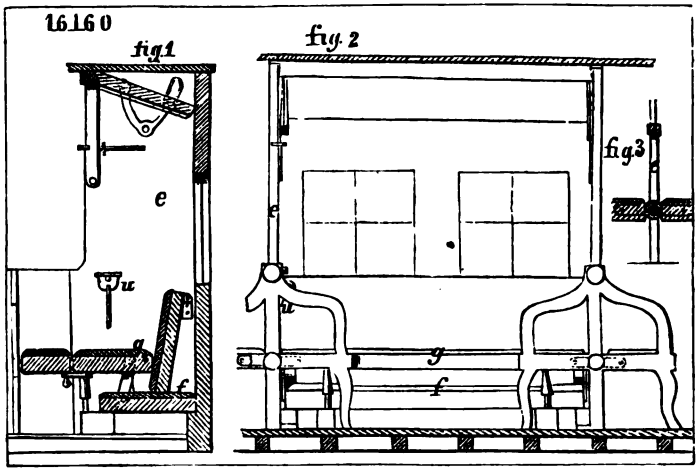

15233

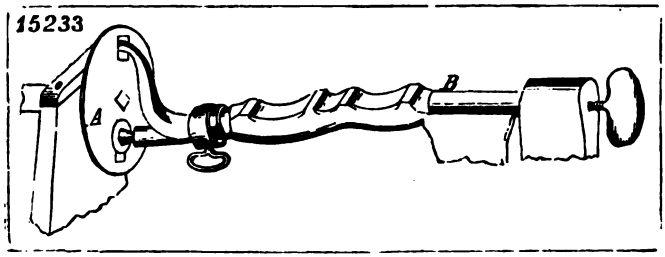

14443

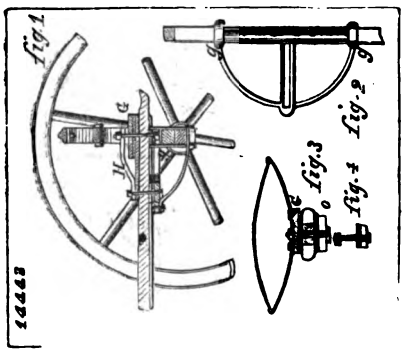

14231

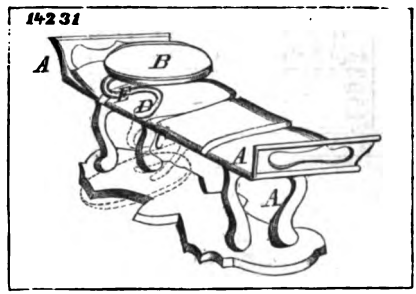

16159

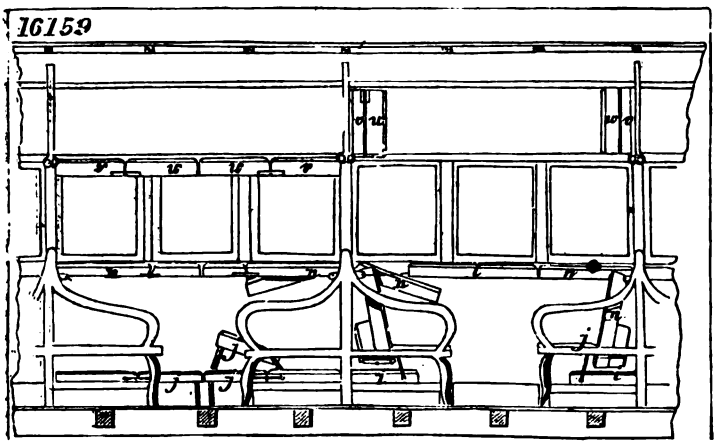

14395

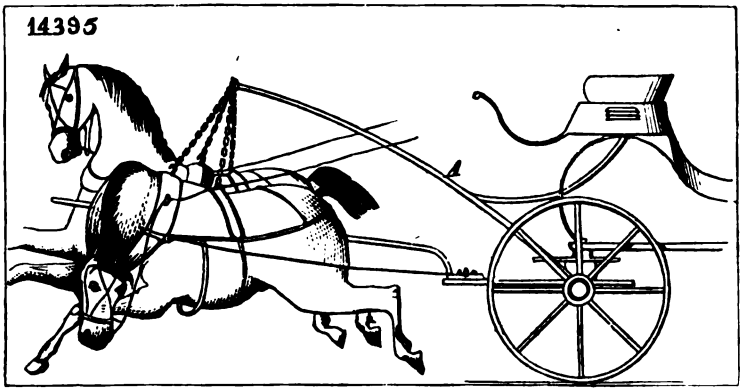

15923

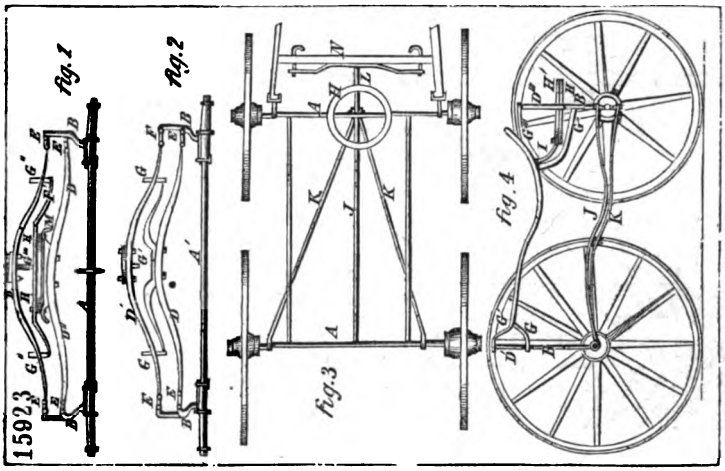

15345

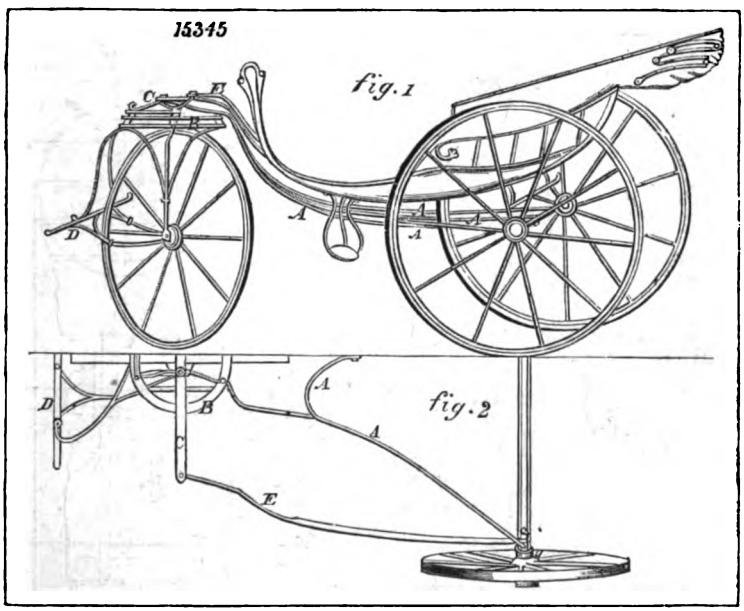

Digitized by Google

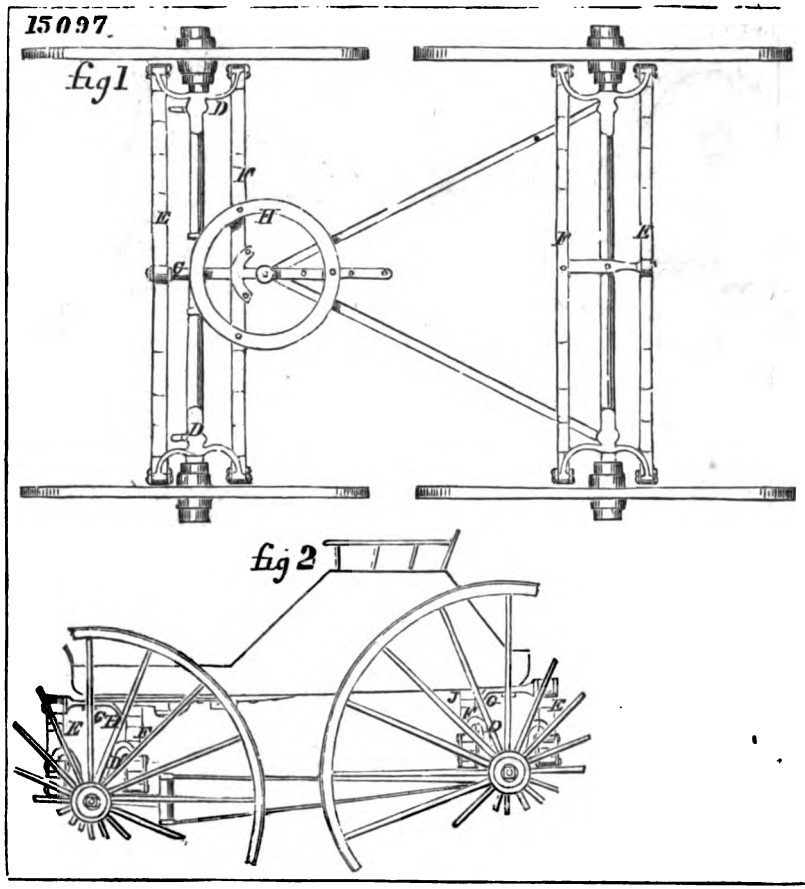

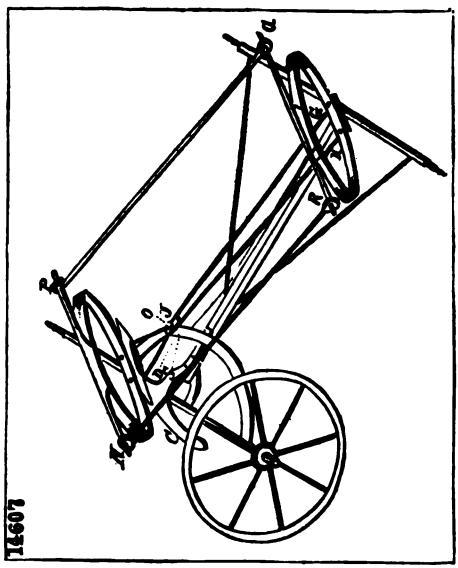

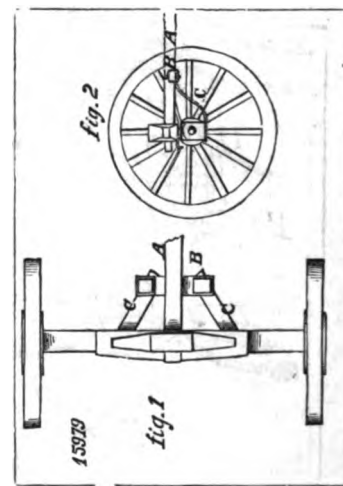

Digitized by Google

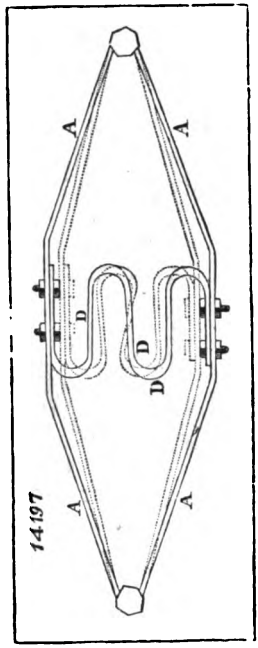

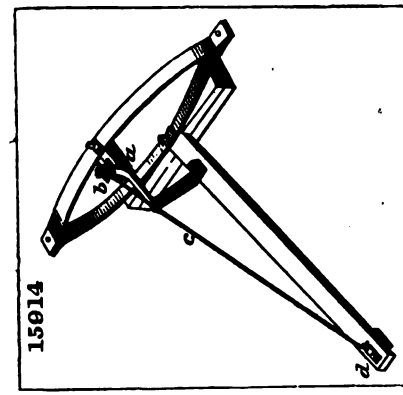

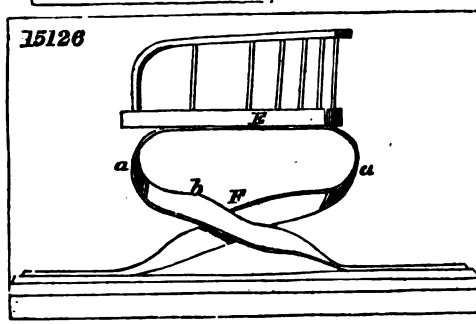

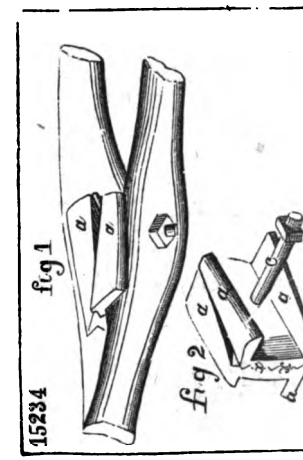

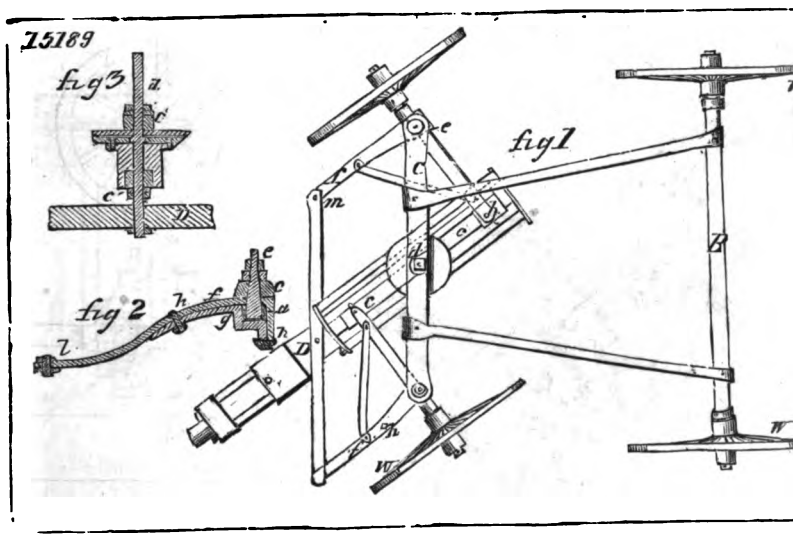

Digitized by Google

15567

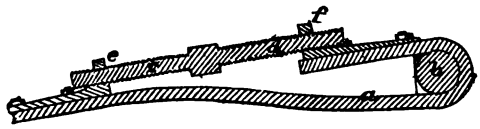

14400

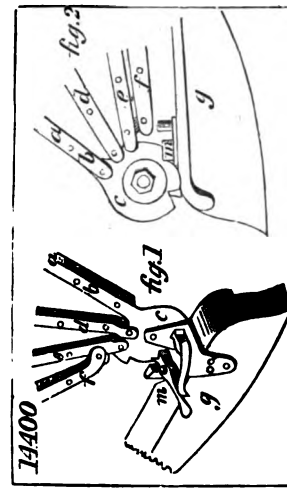

14931

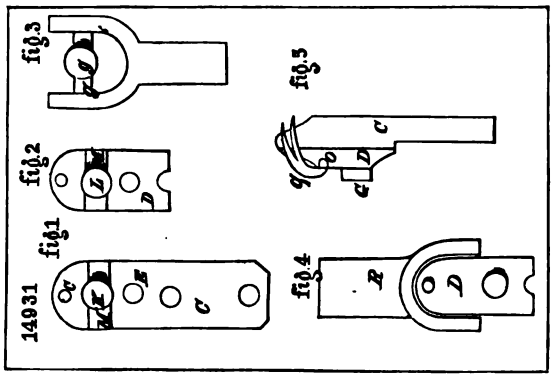

16297

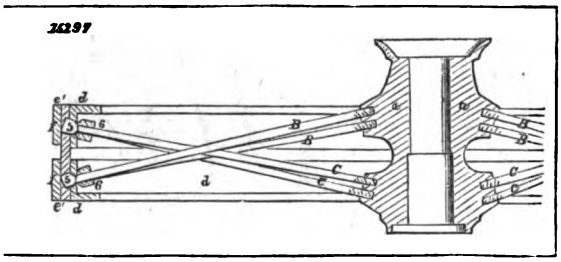

16122

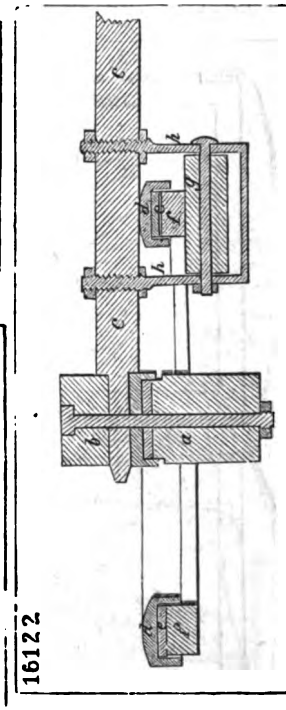

15071

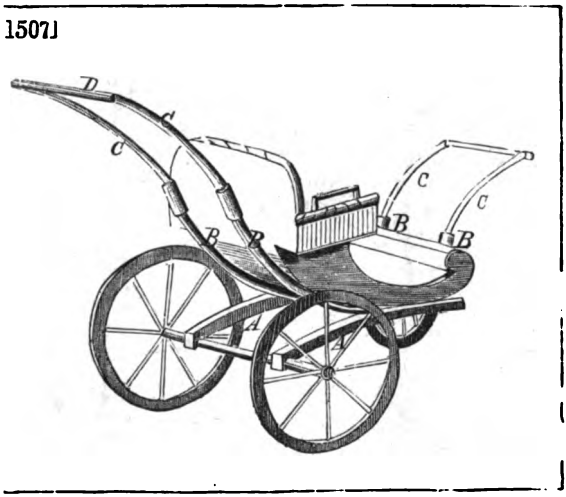

Digitized by Google

14735

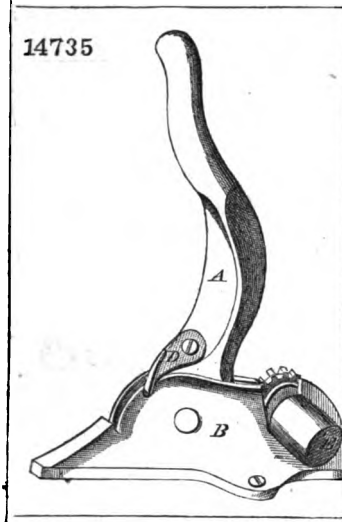

14364

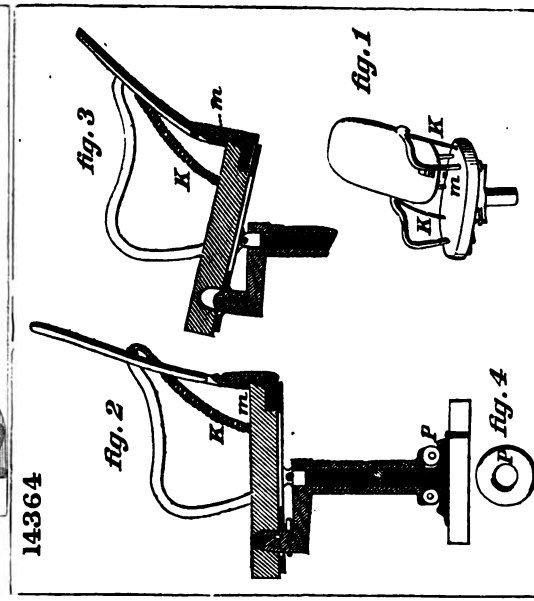

14066

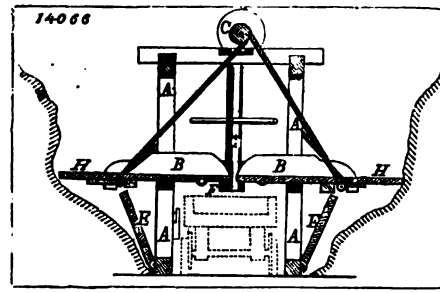

15725

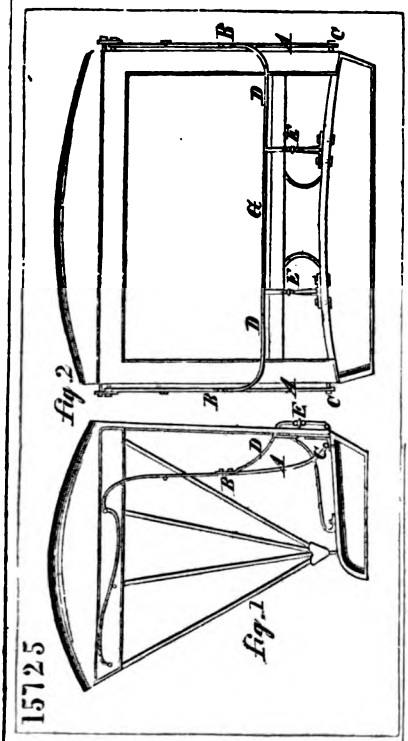

15698

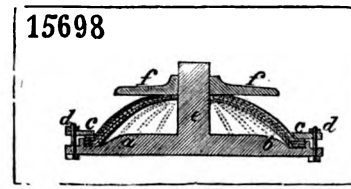

15869

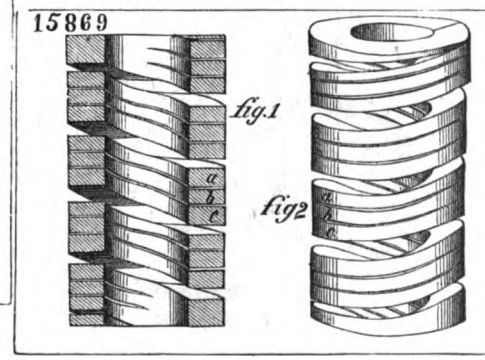

Digitized by Google

15699

fig. 3

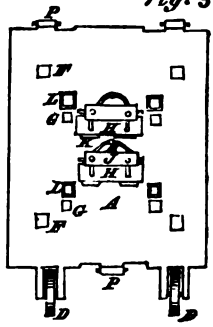

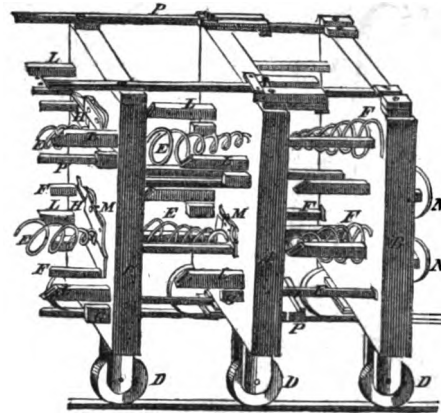

fig. 1

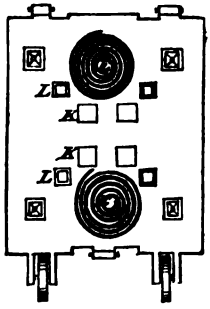

fig. 2

14154

fig 4

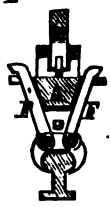

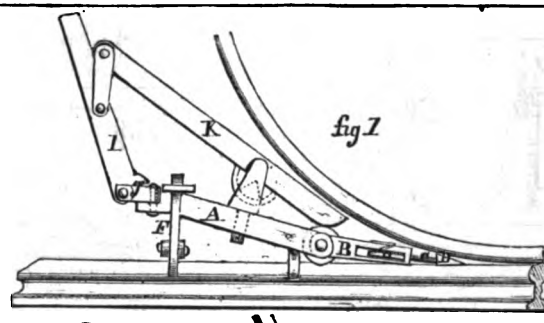

fig 1

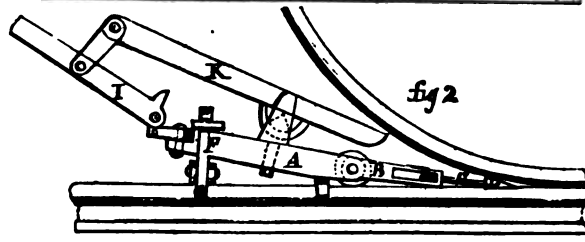

fig 2

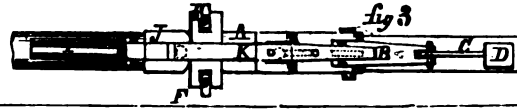

fig 3

Digitized by Google

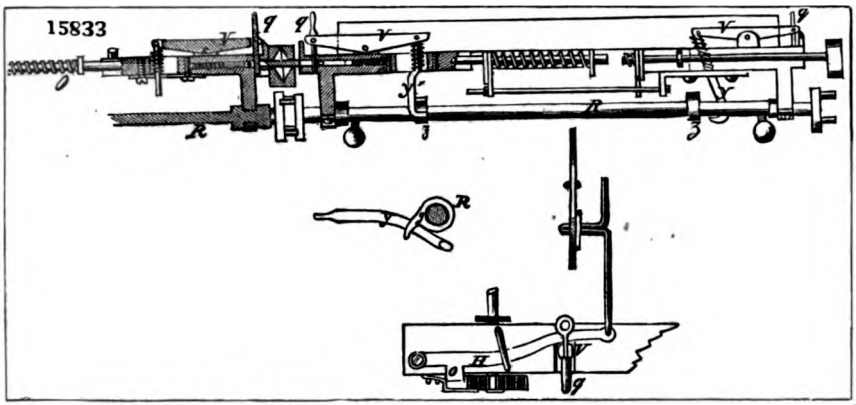

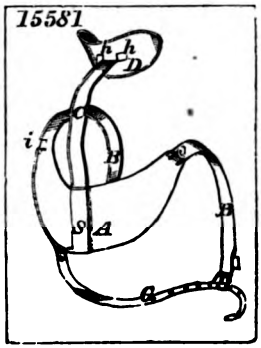

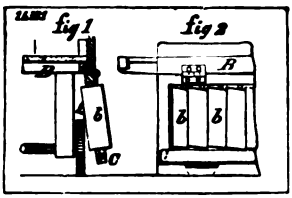

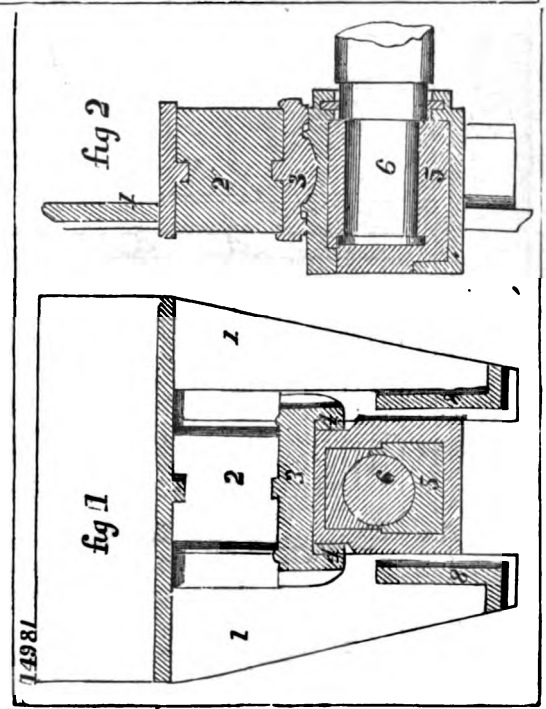

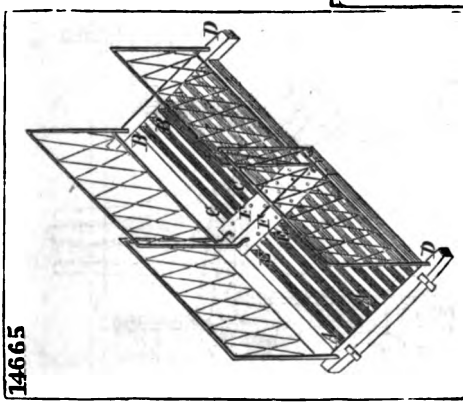

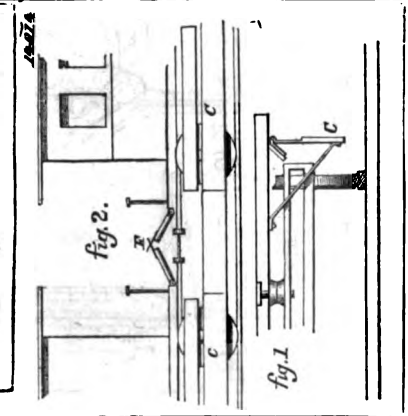

Digitized by Google

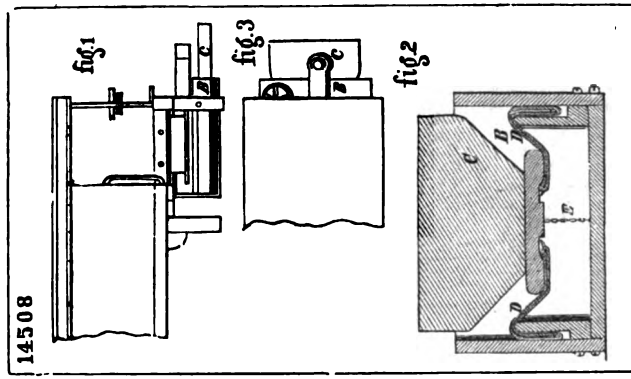

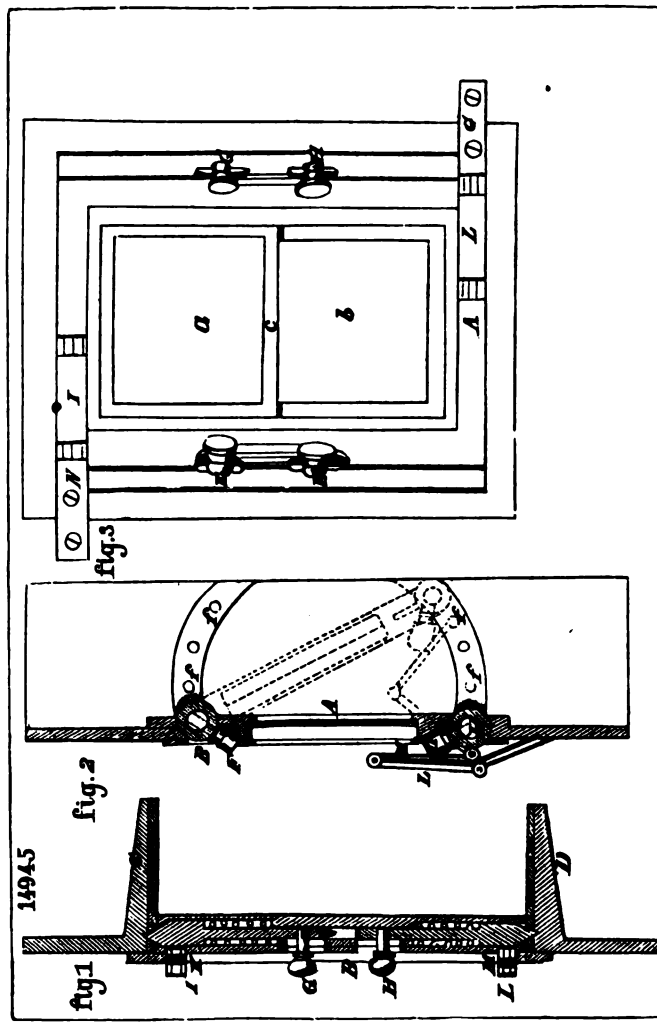

Digitized by Google

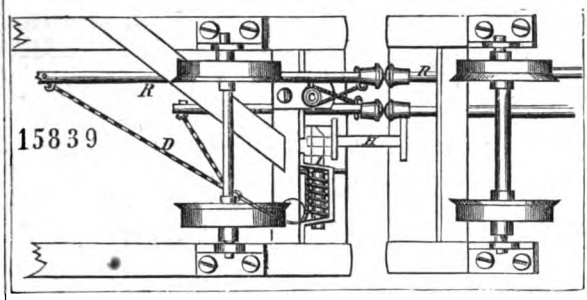

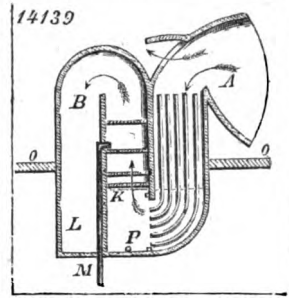

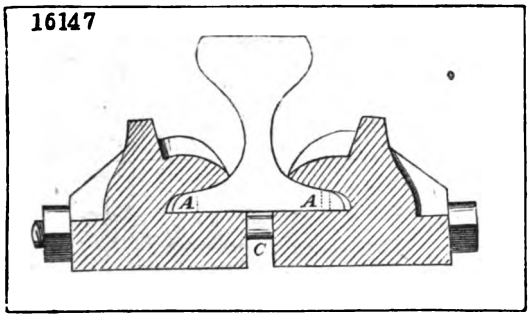

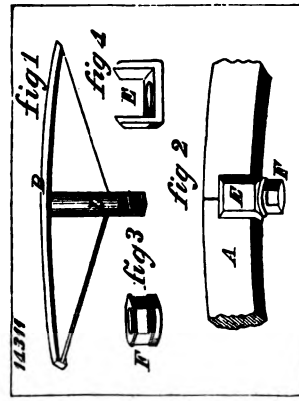

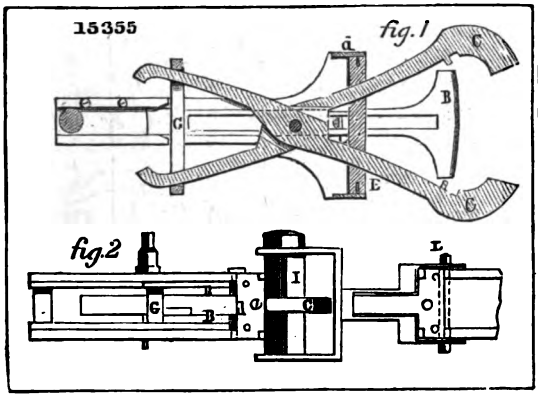

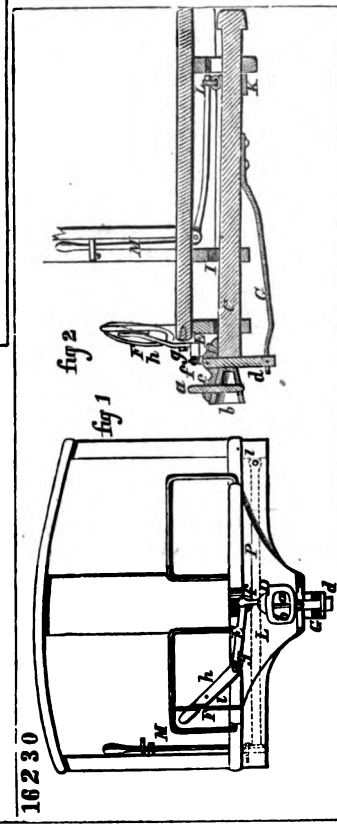

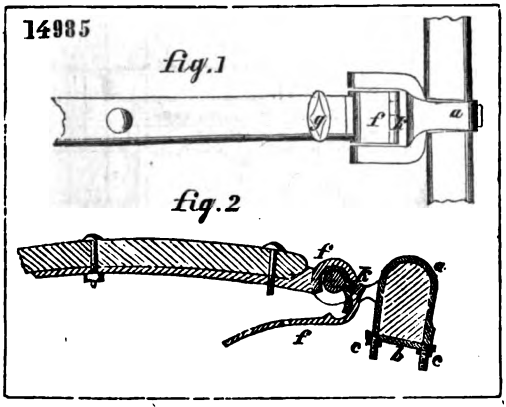

Digitized by Google

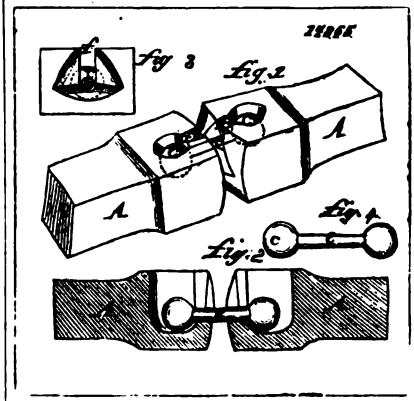

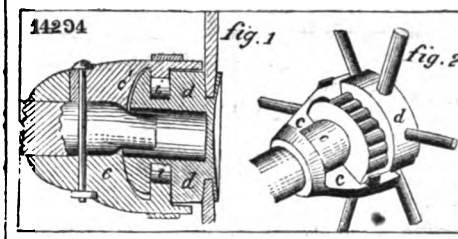

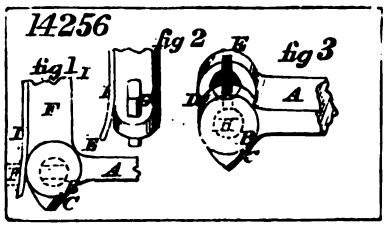

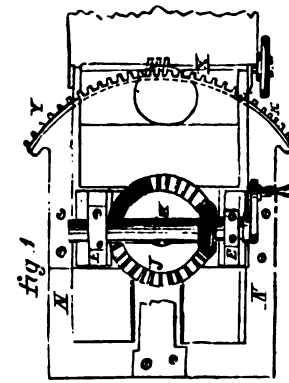

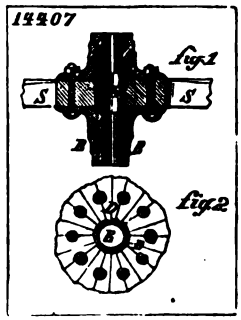

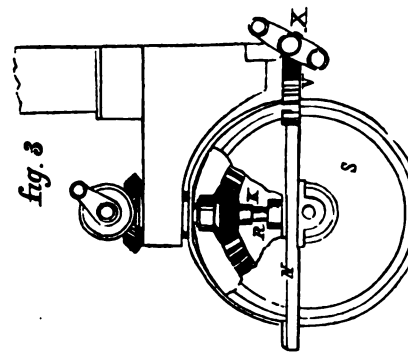

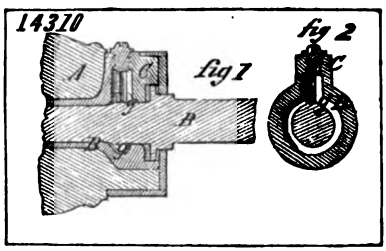

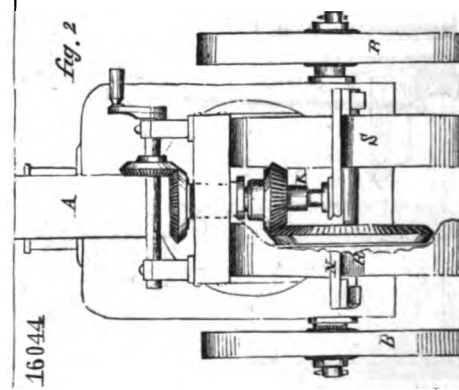

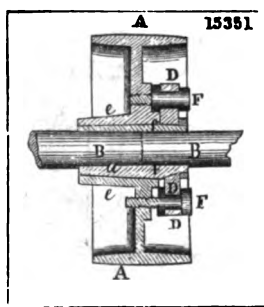

Digitized by Google

14802

fig.1

fig.2

15818

14678

fig.1

fig.3

fig.2

fig.4

fig.5

15770

14371

fig.1

fig.2

Digitized by Google

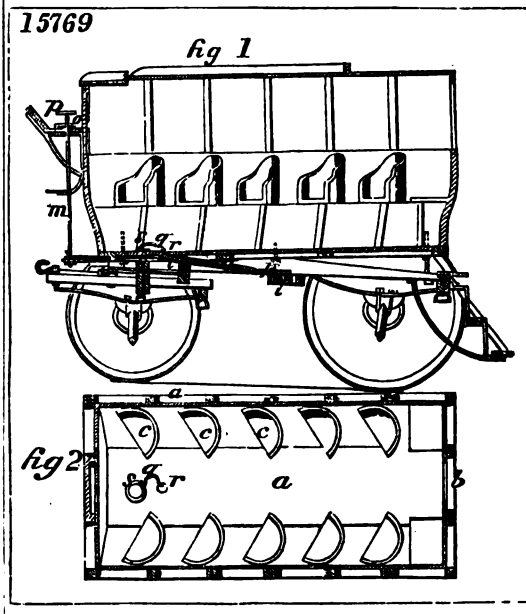

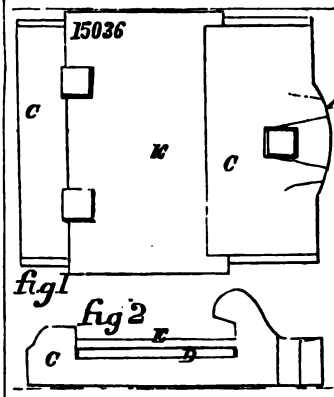

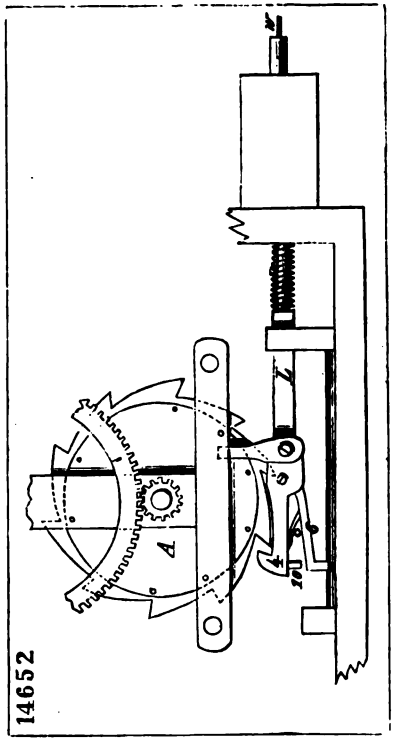

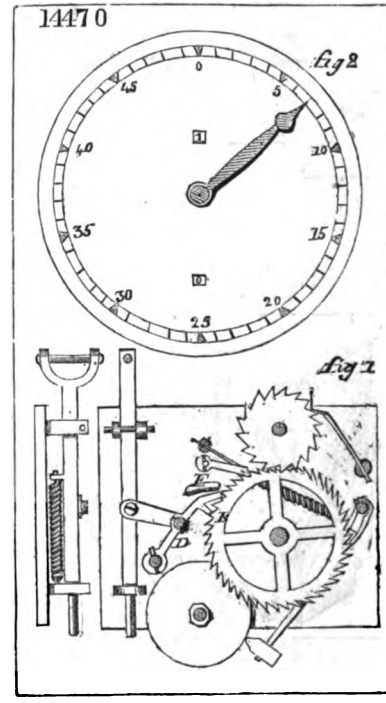

Digitized by Google

15480

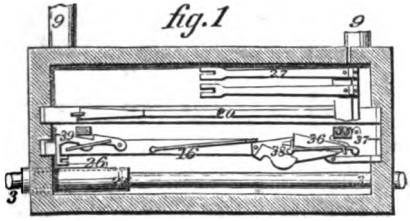

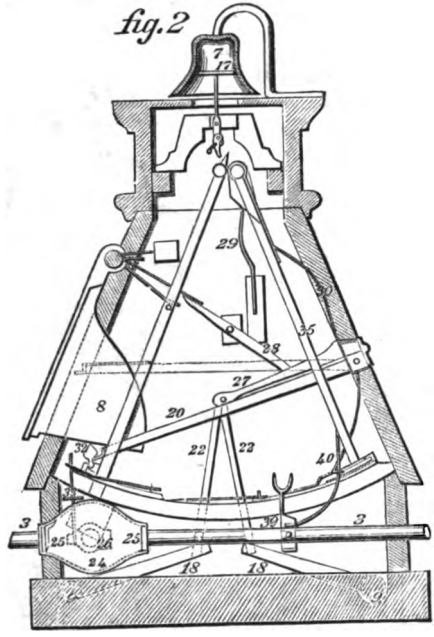

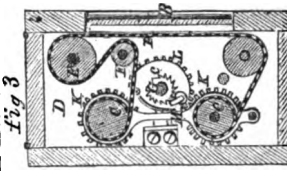

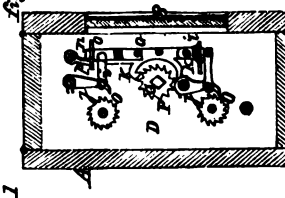

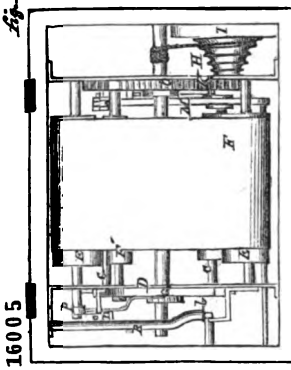

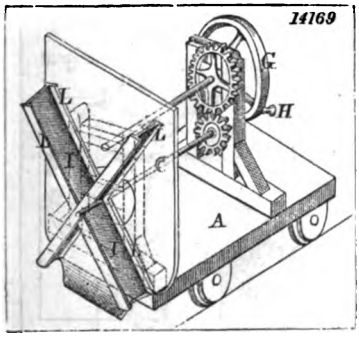

15050

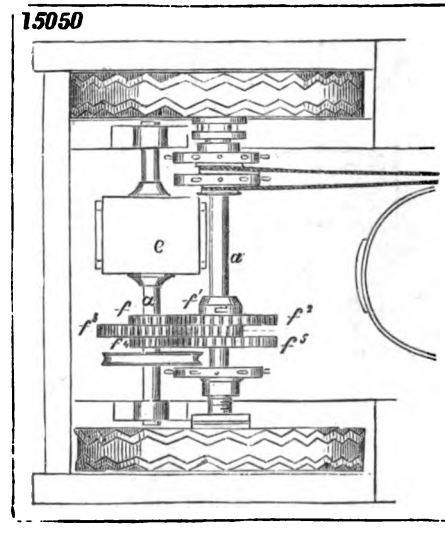

Digitized by Google

16300

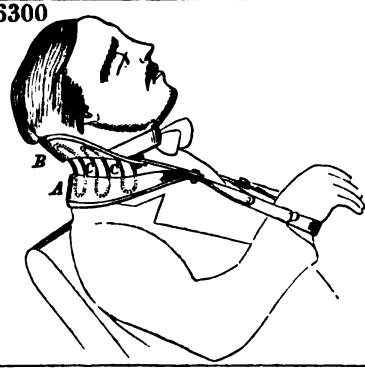

15991

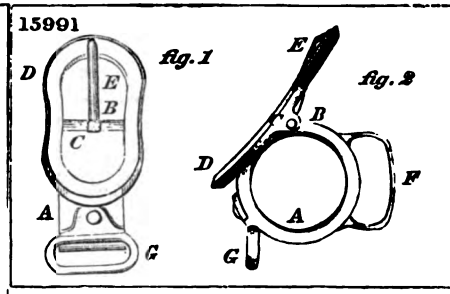

15558

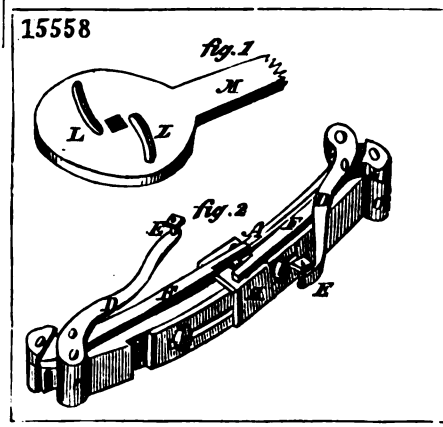

15272

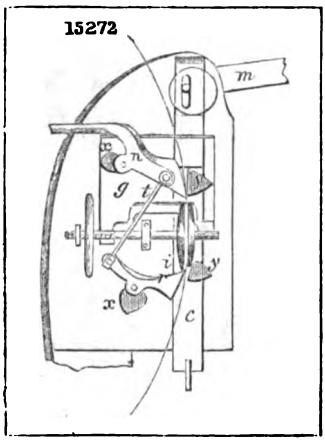

15737

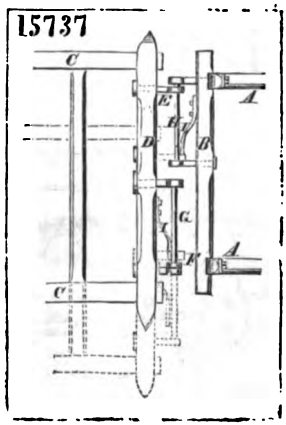

14653

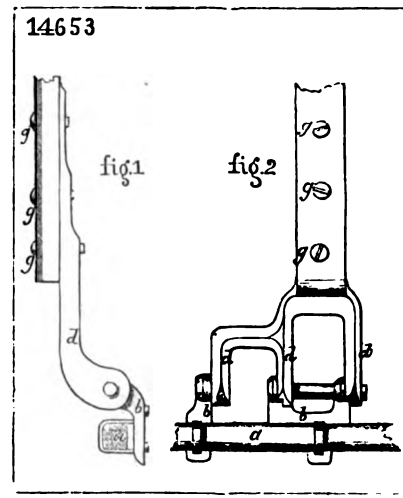

15908

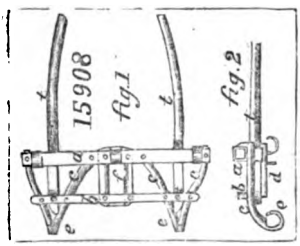

15214

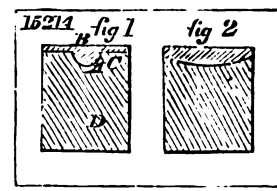

Digitized by Google

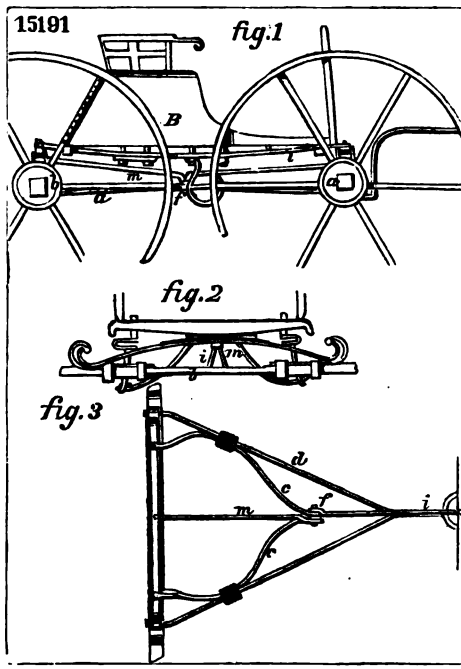

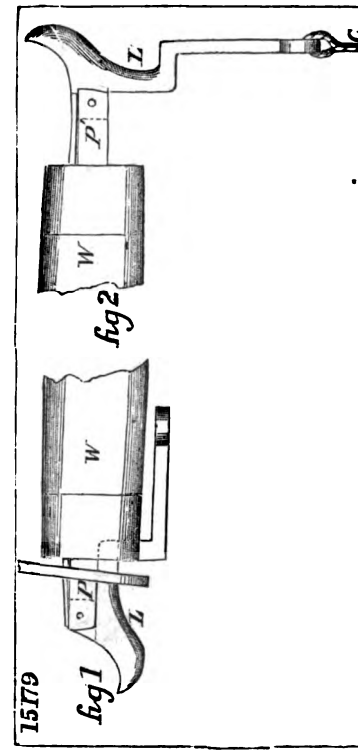

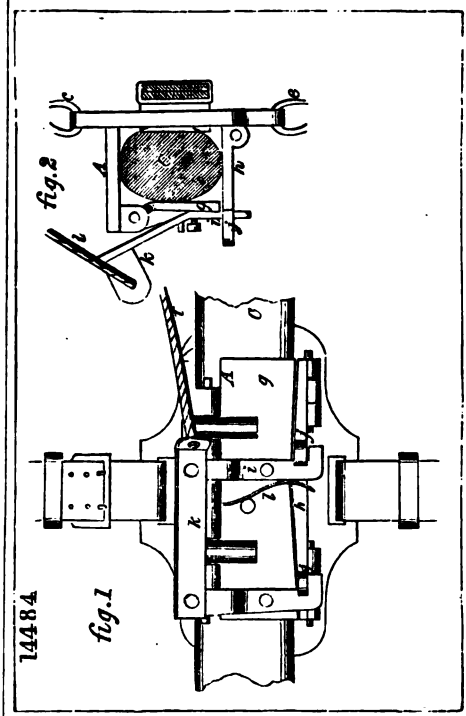

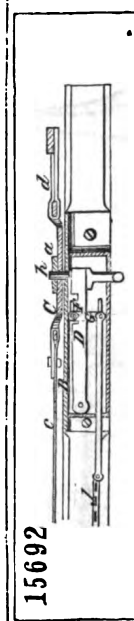

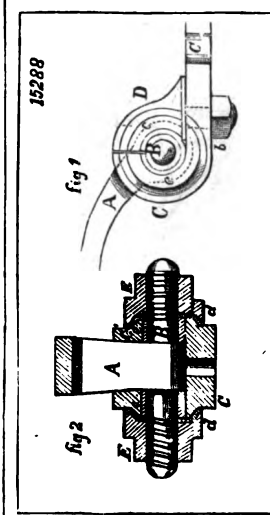

Digitized by Google

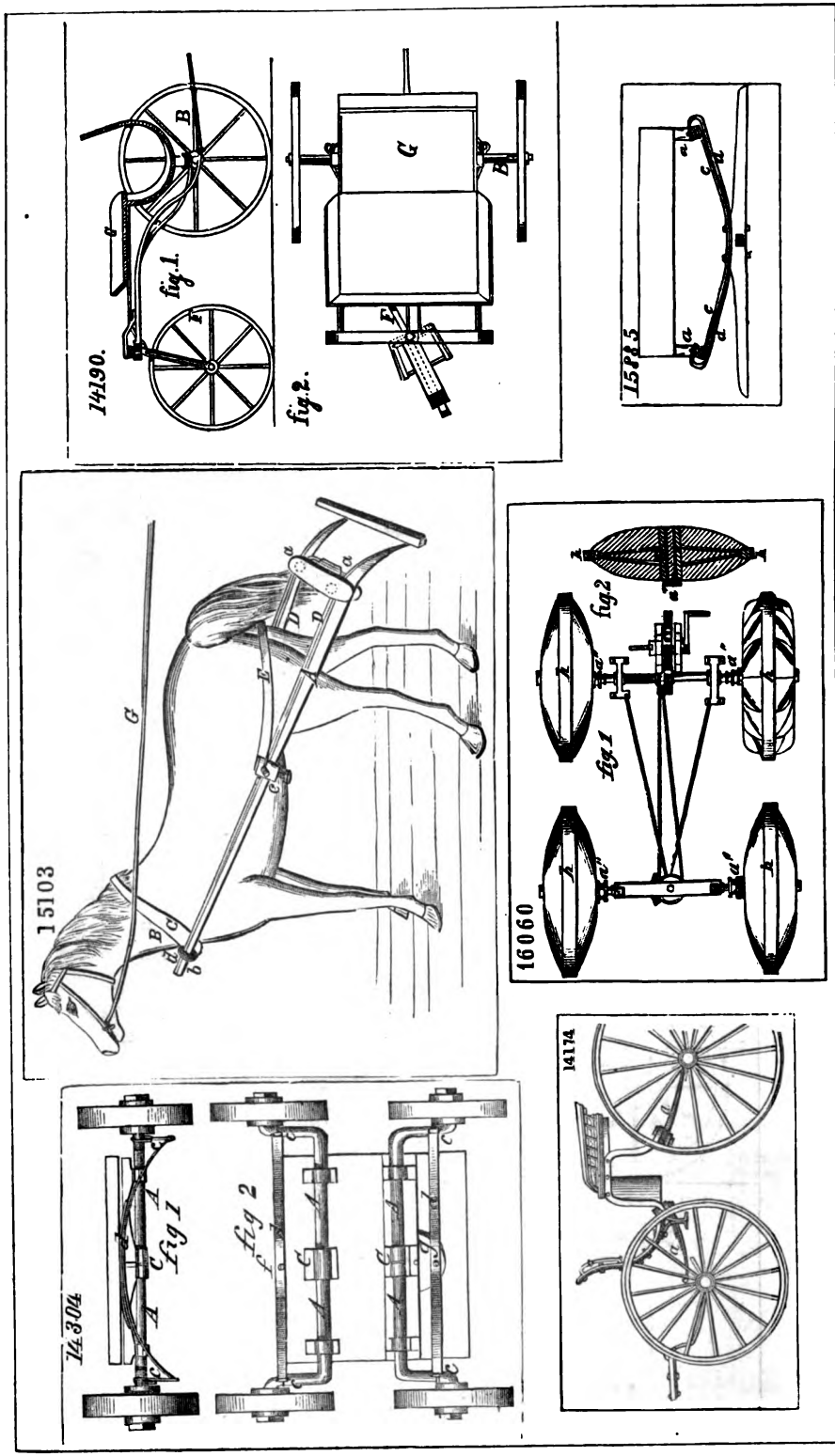

Digitized by Google

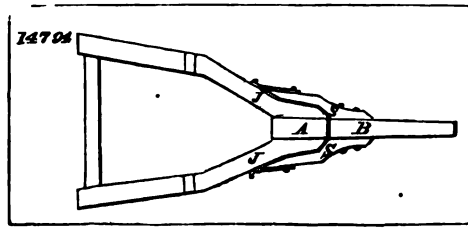

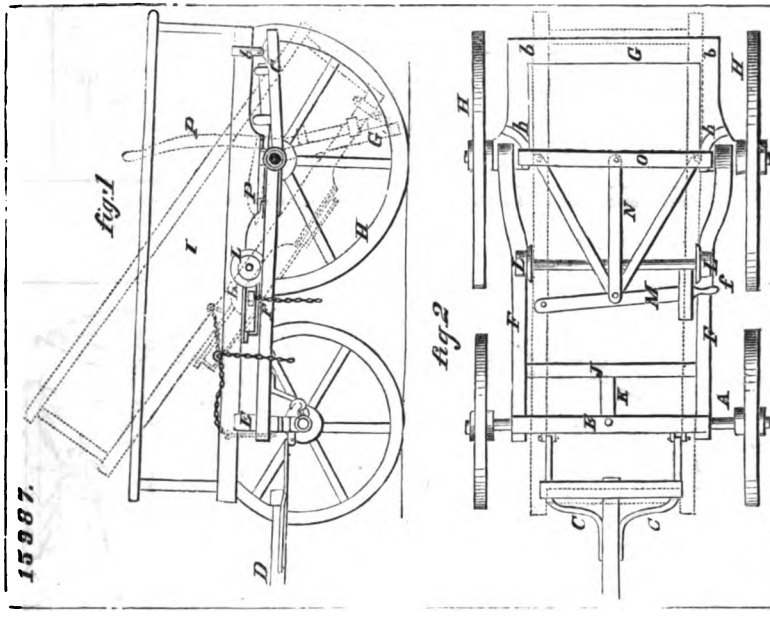

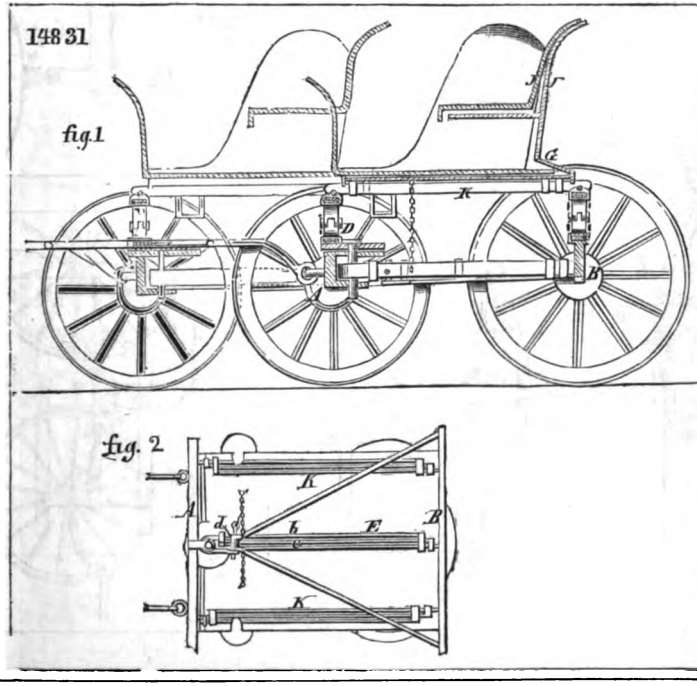

Digitized by Google

15109

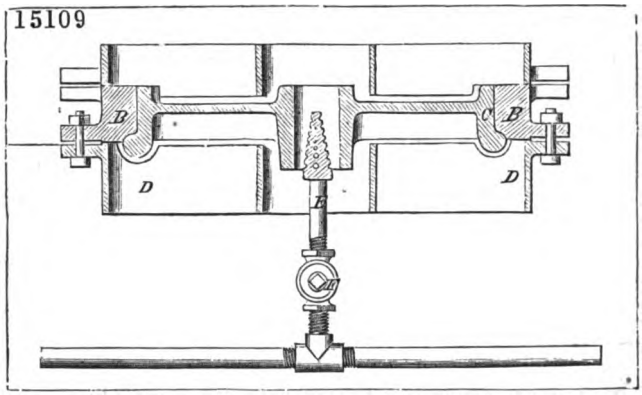

15049

fig 1

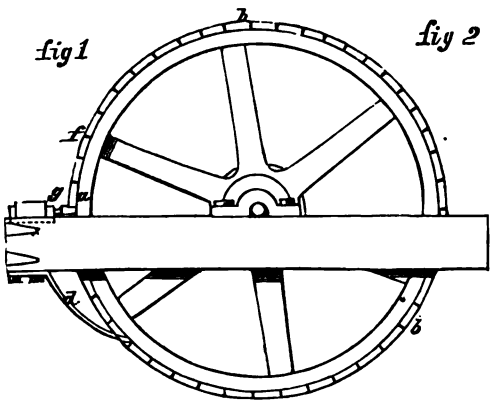

fig 2

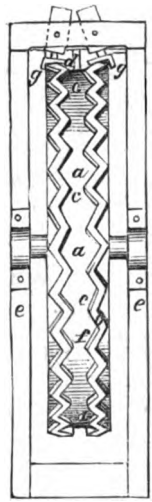

fig 3

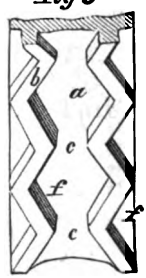

14434

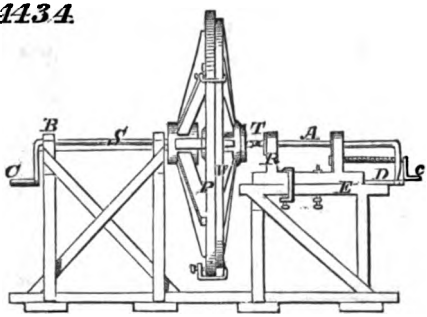

15759

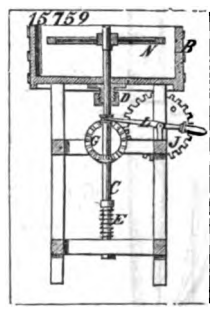

Digitized by Google

15461

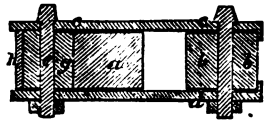

15935

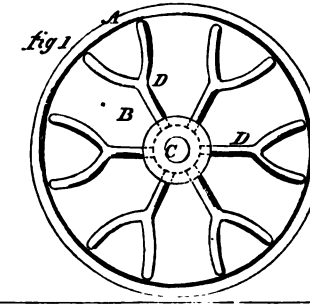

15092

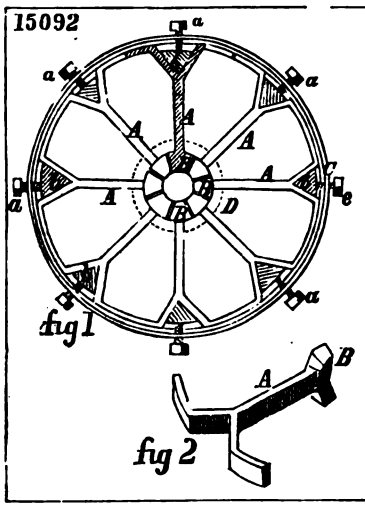

15460

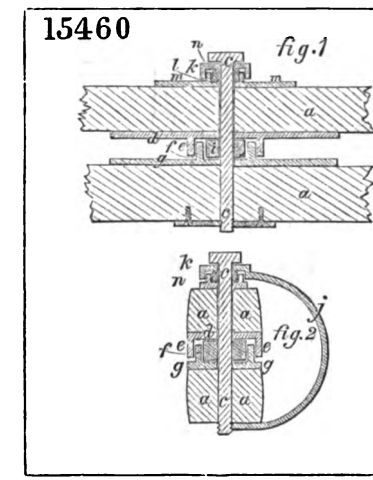

15670

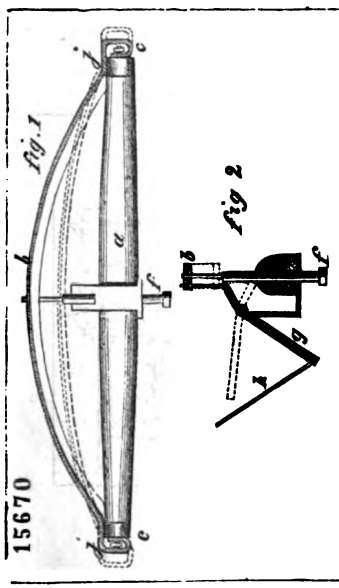

1555-1

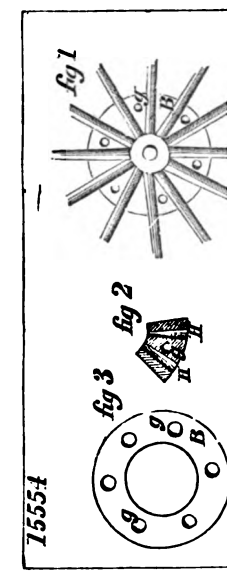

15339

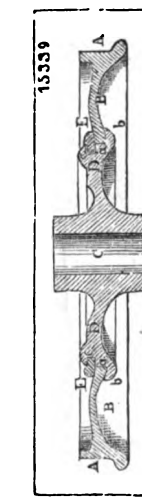

Digitized by Google

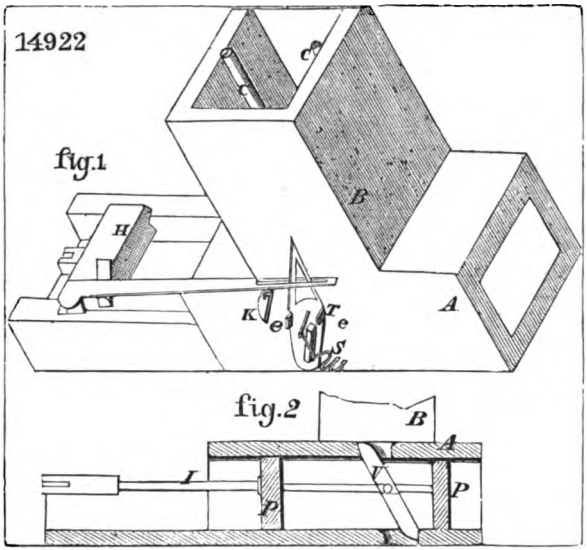

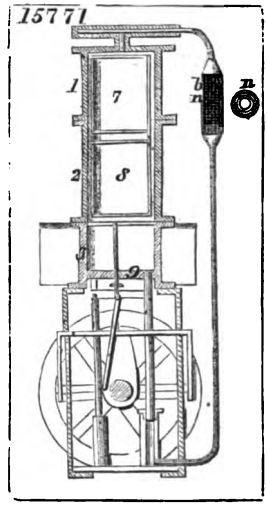

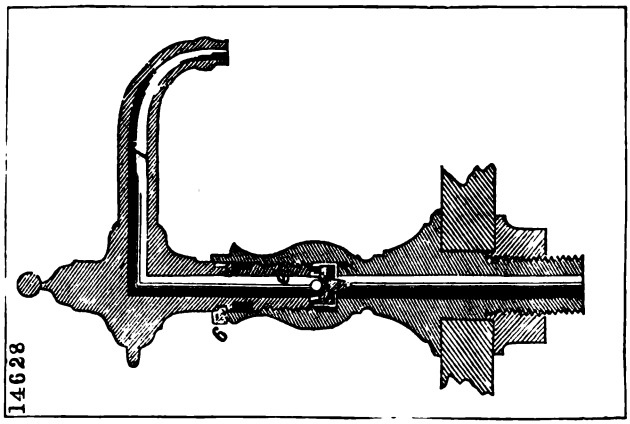

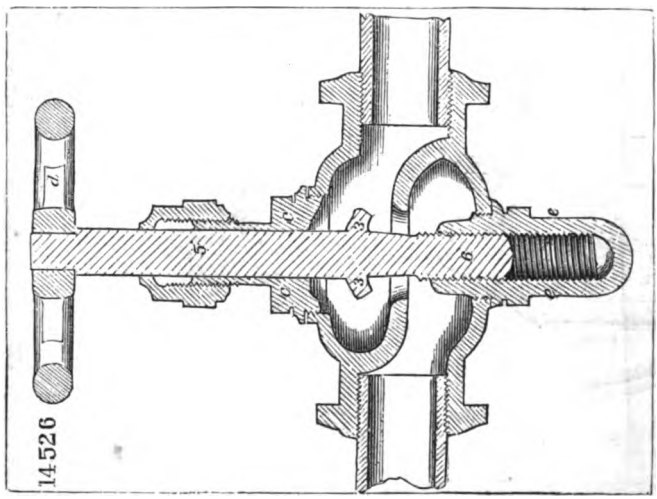

Digitized by Google

14690

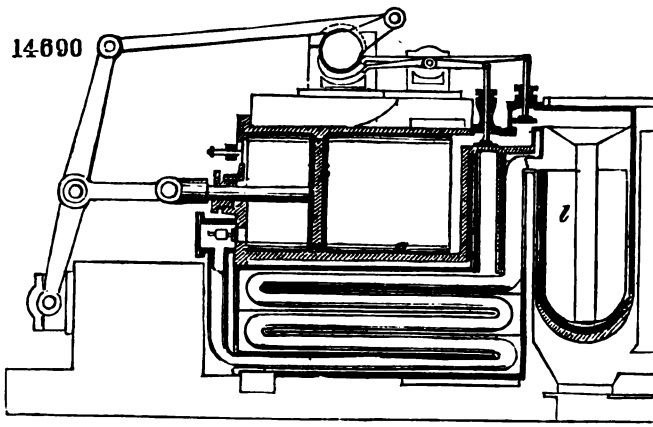

15459

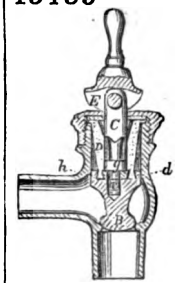

14089

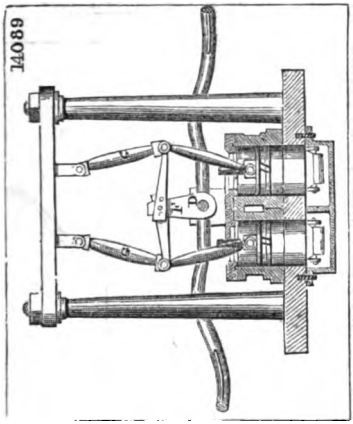

14429

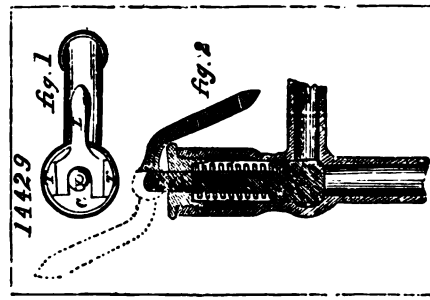

15719

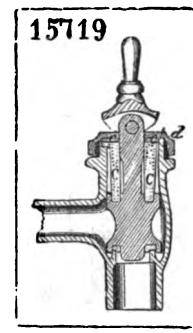

14734

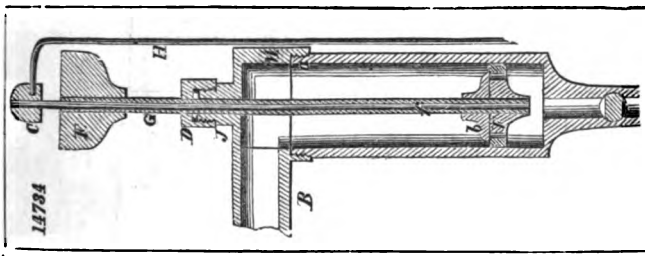

16232

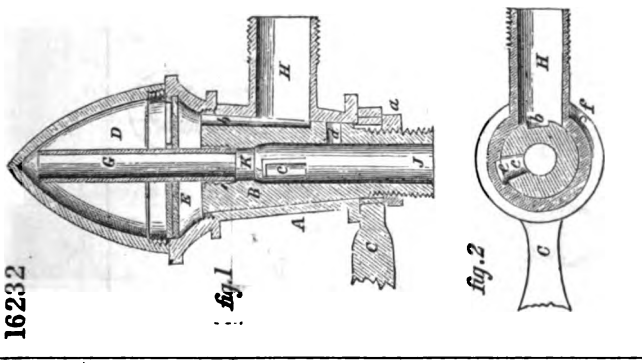

16043

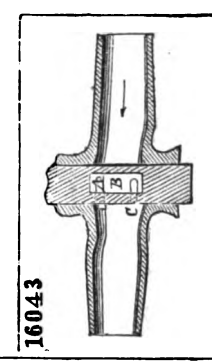

Digitized by Google

15263

fig 1

fig 2

15027

16284

fig 1

fig 2

14982

15646

15263

fig 2

fig 1

15430

fig 1

fig. 2

fig. 3

14693

Digitized by Google

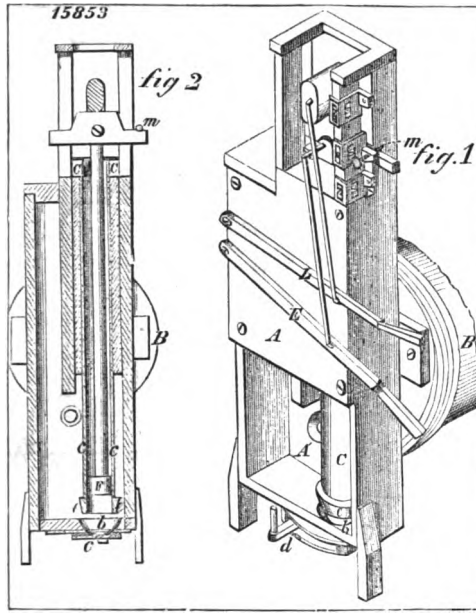

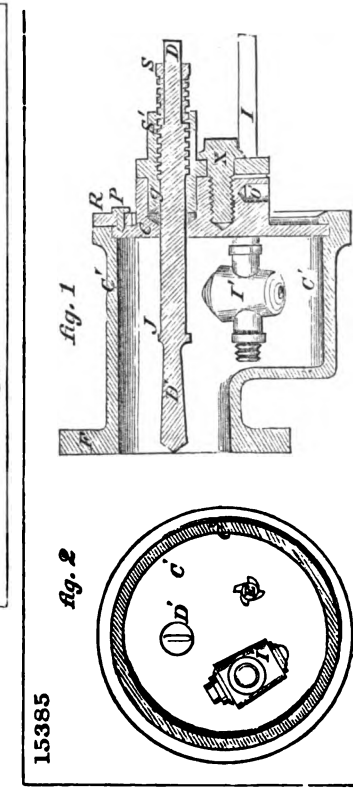

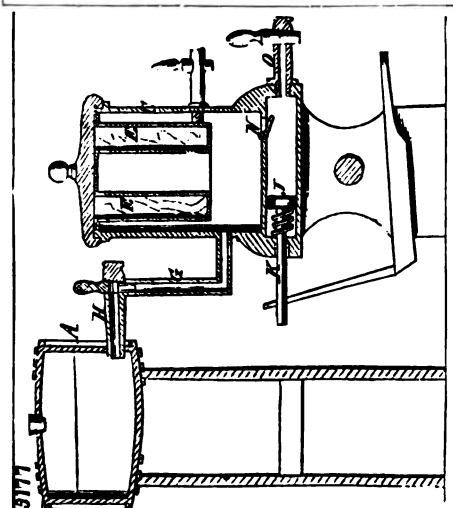

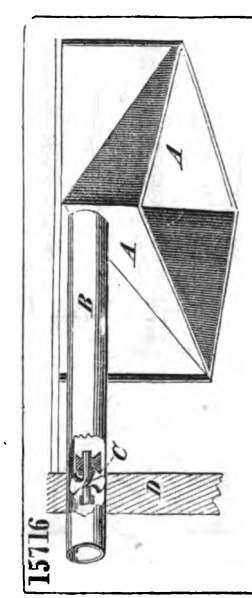

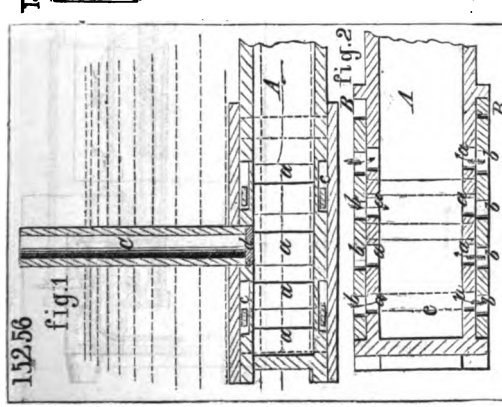

Digitized by Google

14602

fig. 1

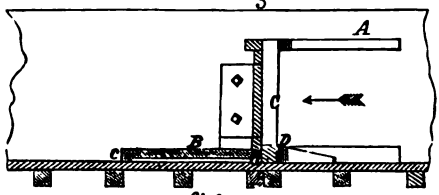

fig. 2

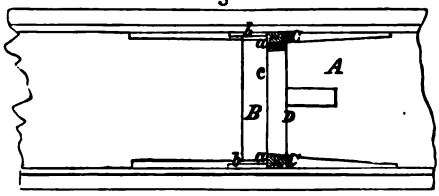

14090.

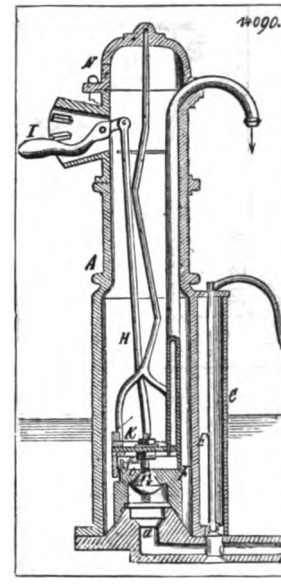

15846

fig. 1

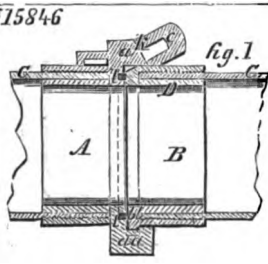

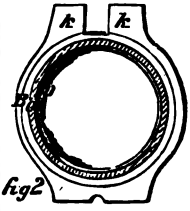

fig 2

14557

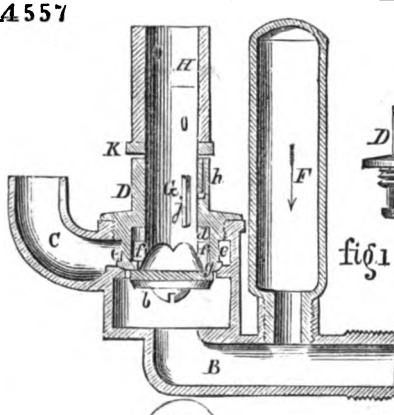

fig 1

fig. 3

fig. 2

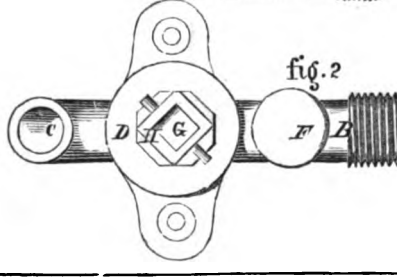

14805

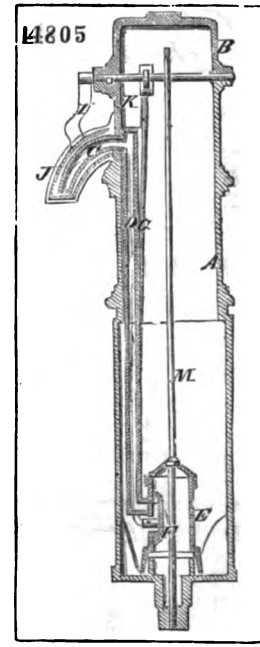

Digitized by Google

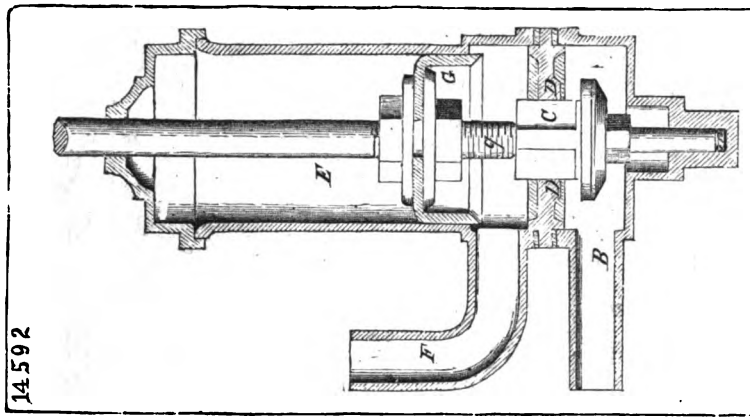

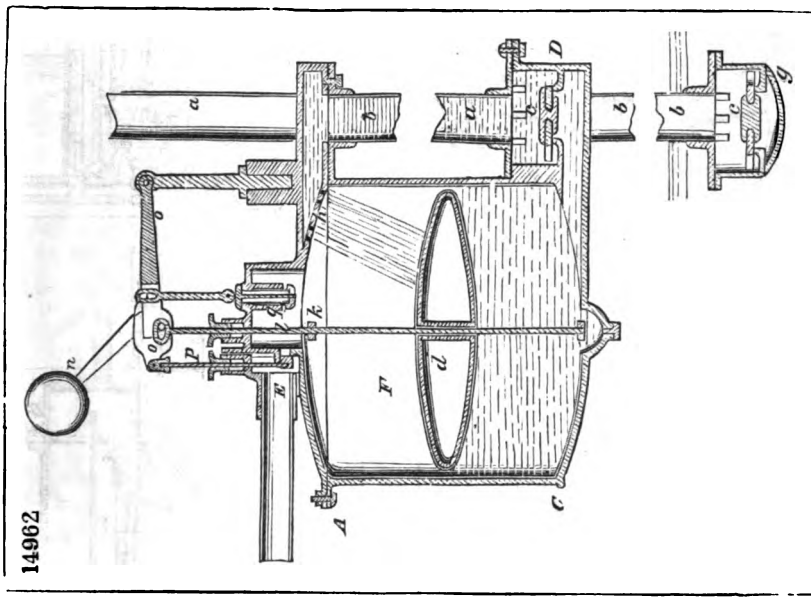

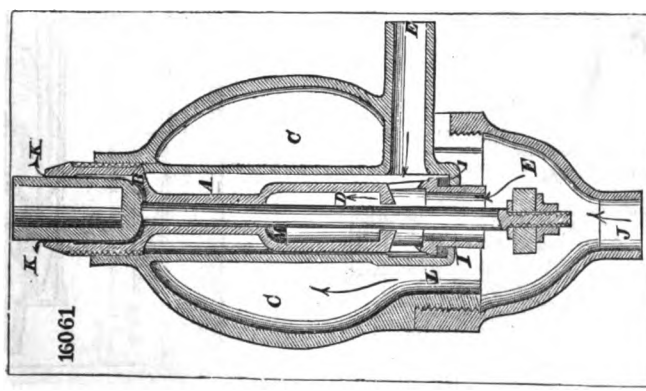

Digitized by Google

14602

fig.1

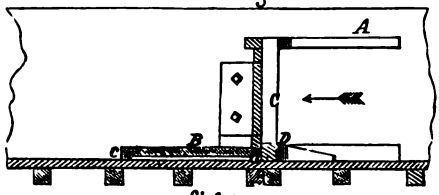

fig.2

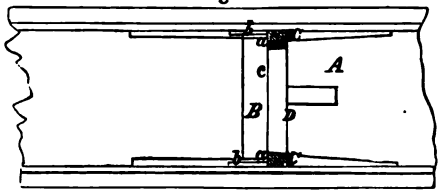

14090.

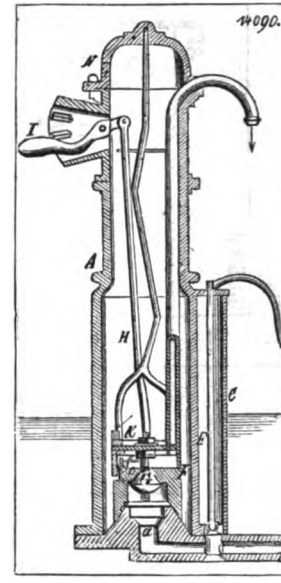

15846

fig.1

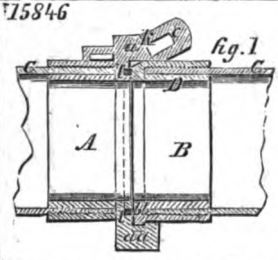

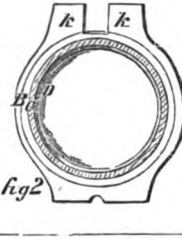

fig2

14557

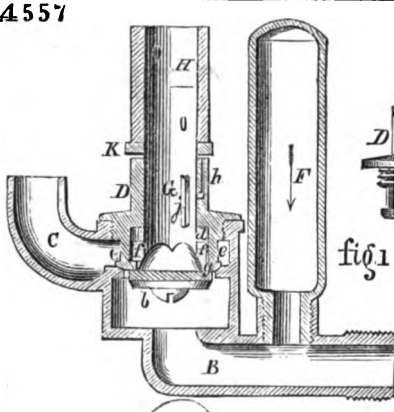

fig1

fig.3

fig.2

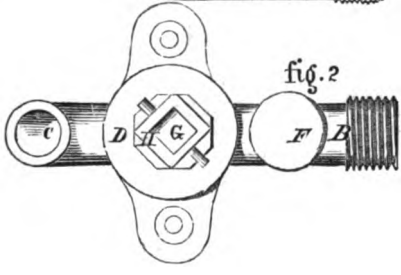

14805

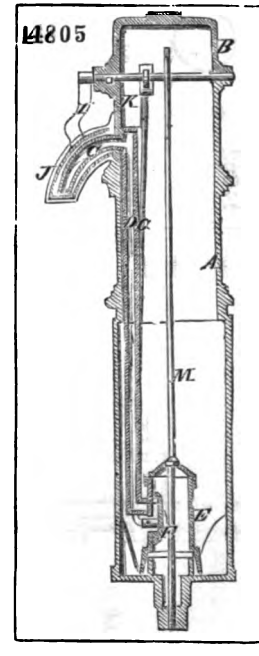

Digitized by Google

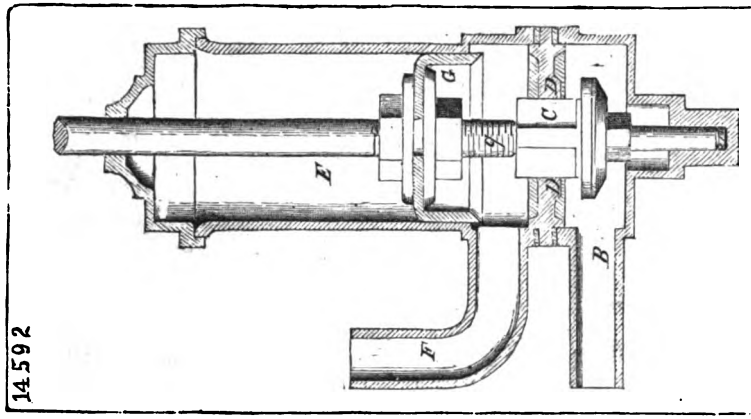

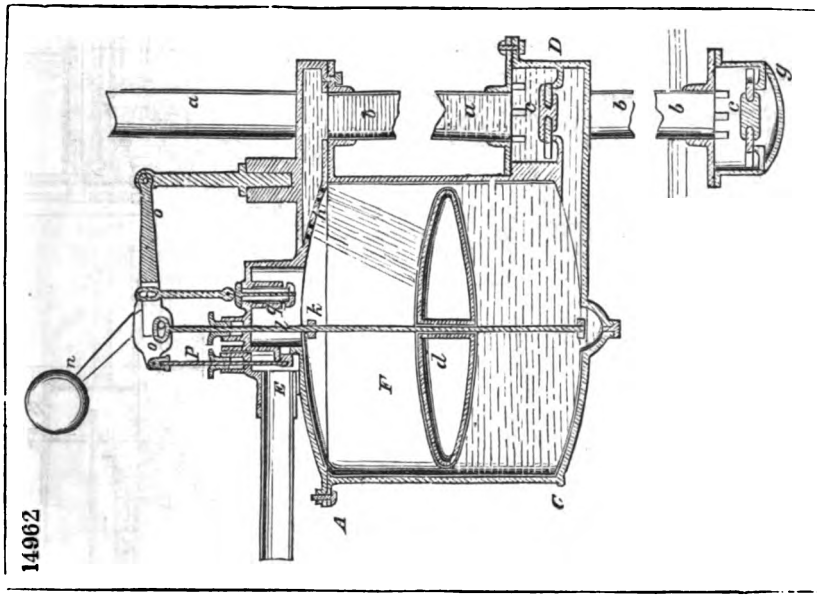

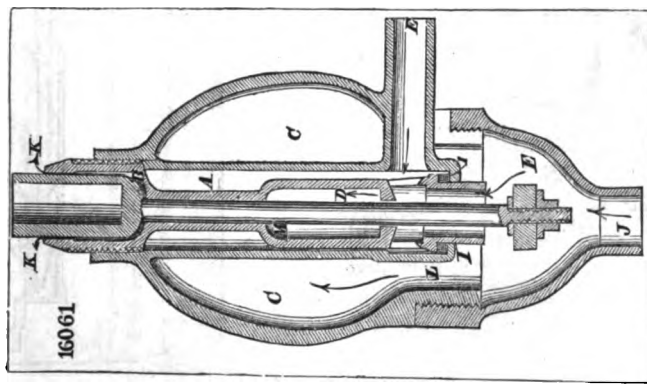

Digitized by Google

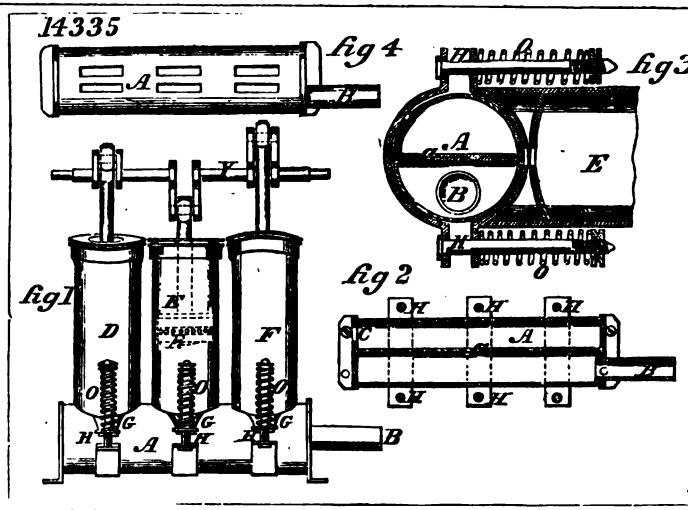

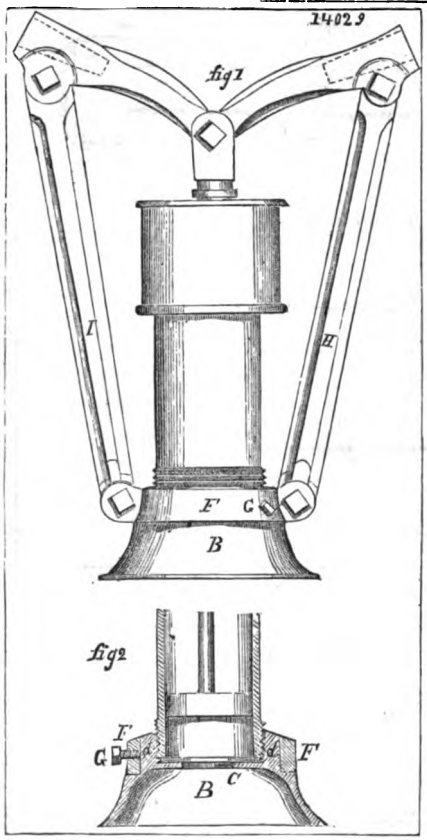

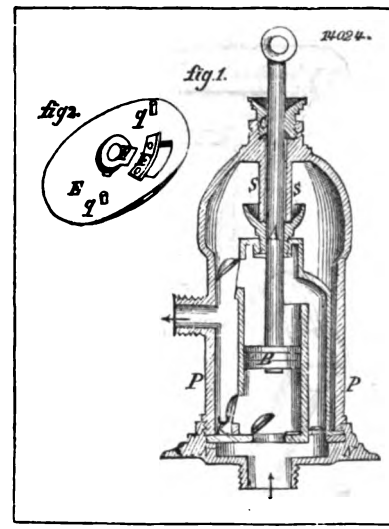

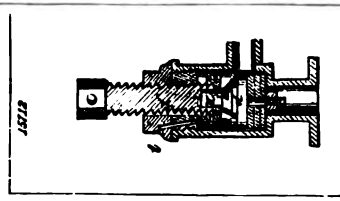

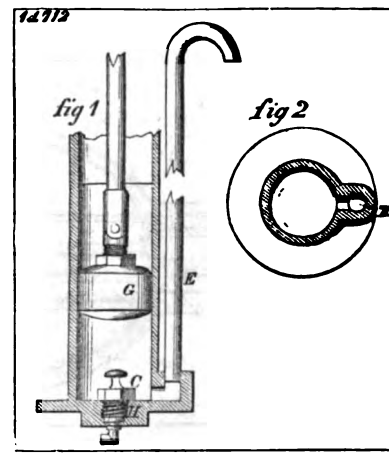

Digitized by Google

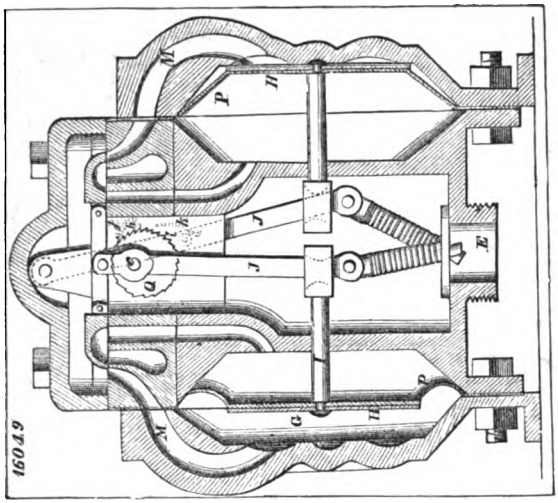

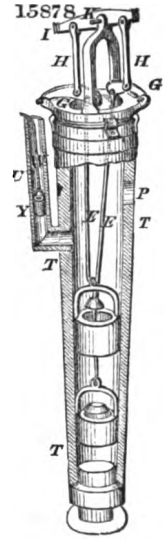

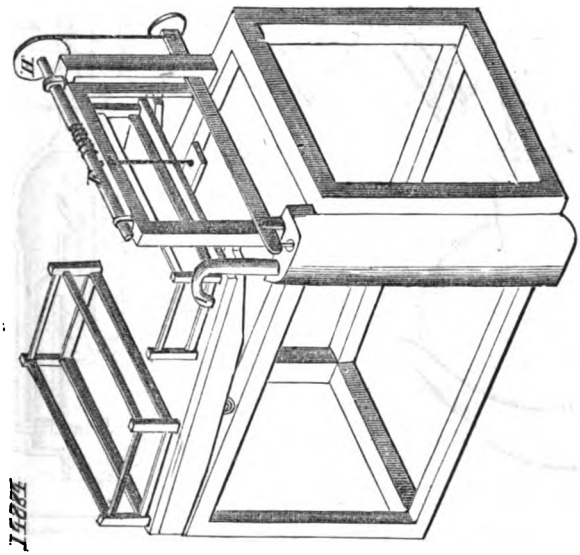

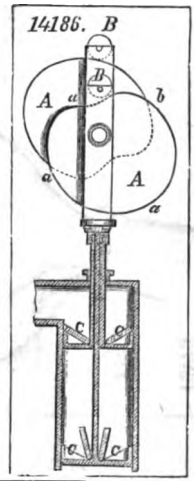

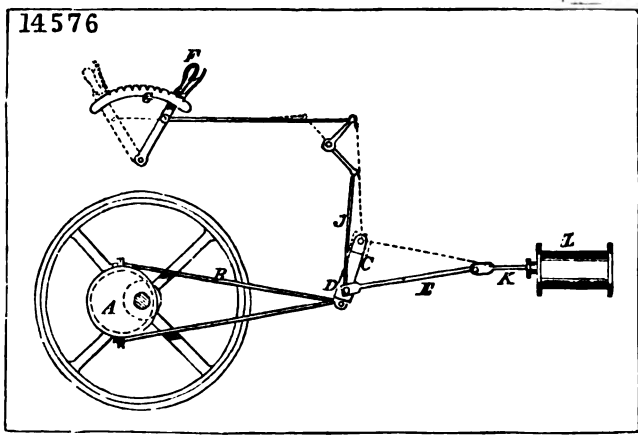

Digitized by Google

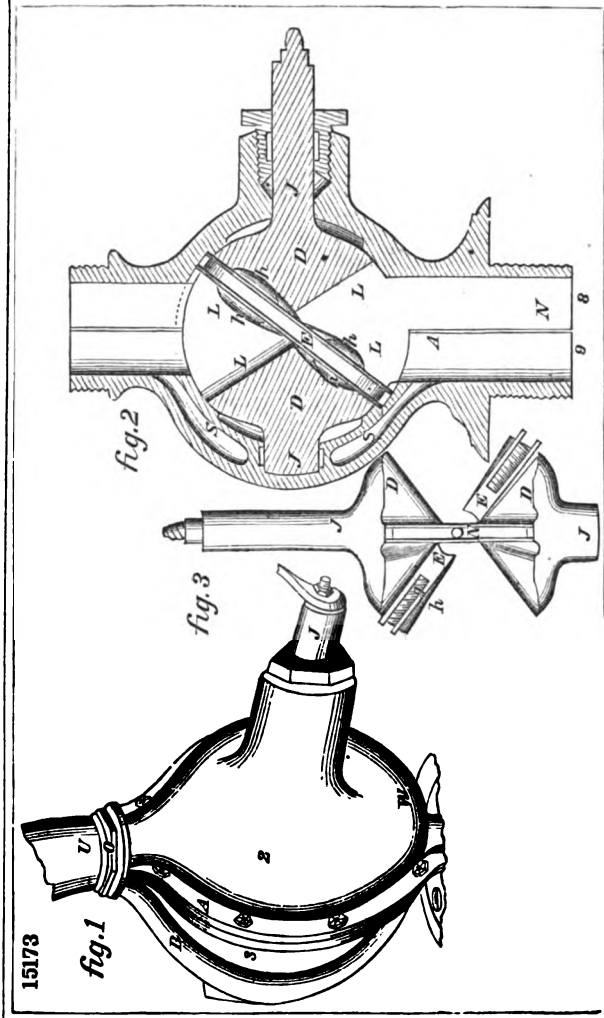

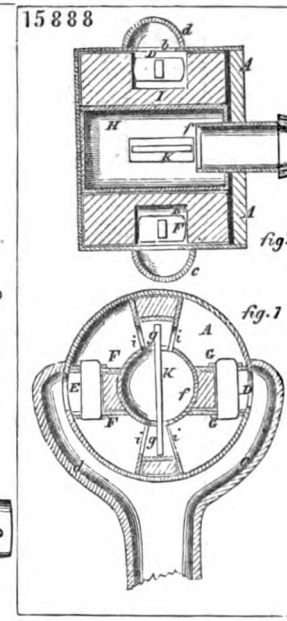

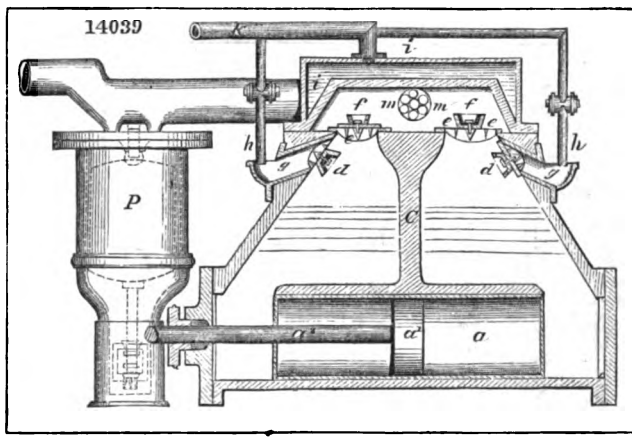

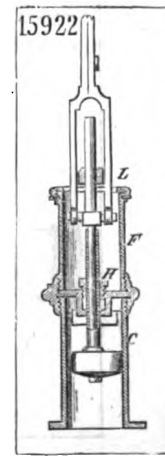

Digitized by Google

16229

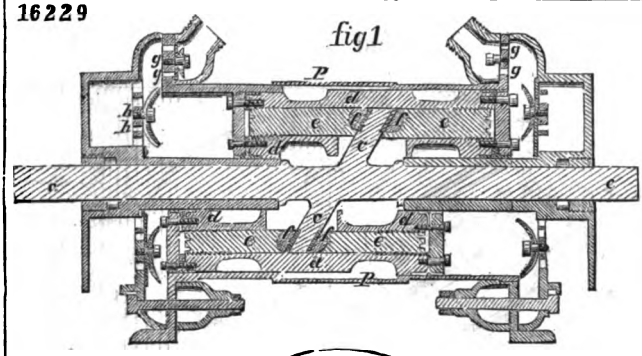

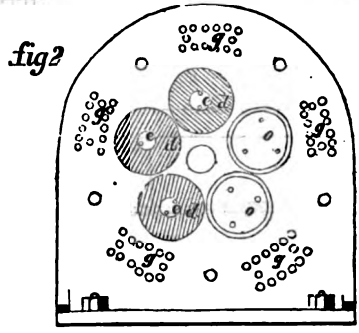

14372

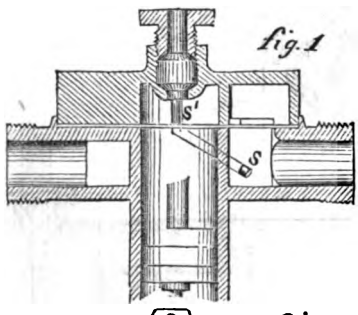

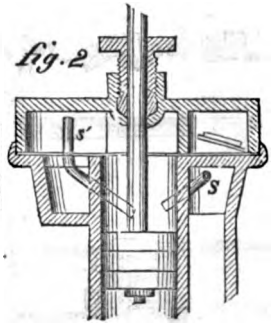

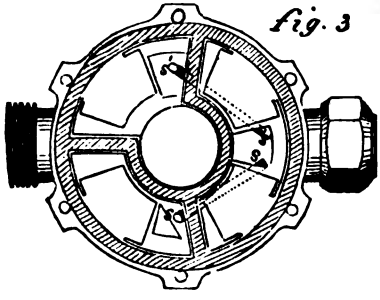

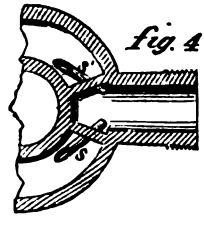

Digitized by Google

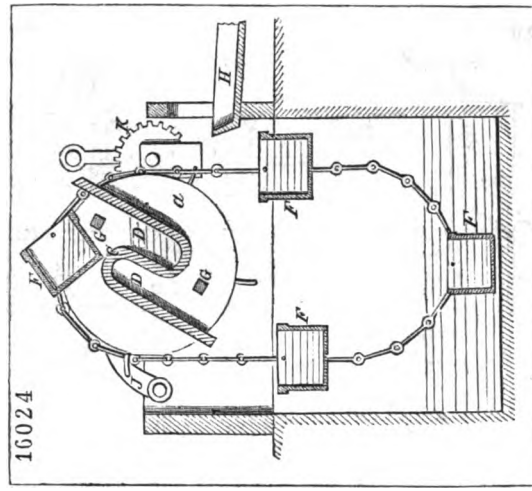

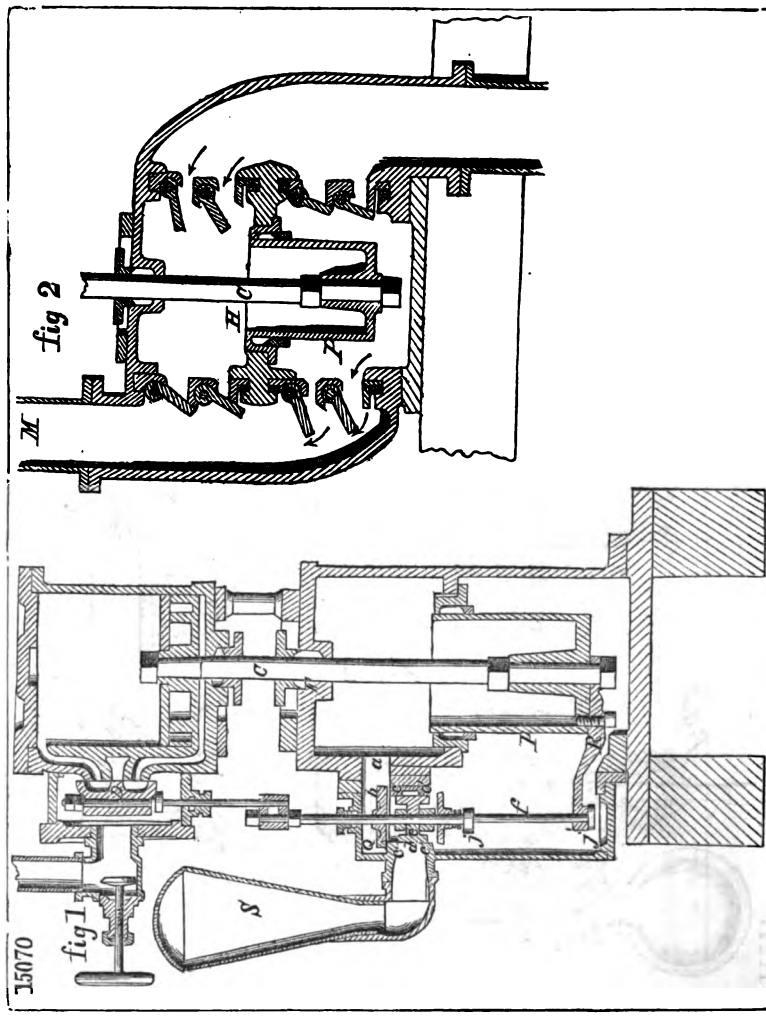

Digitized by Google

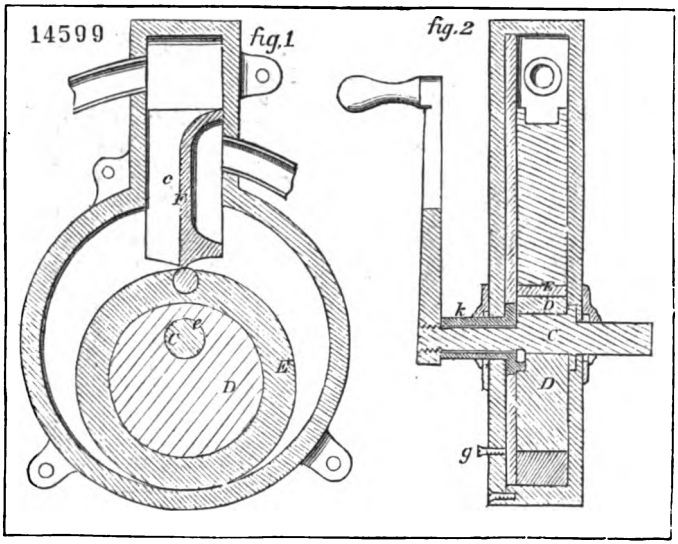

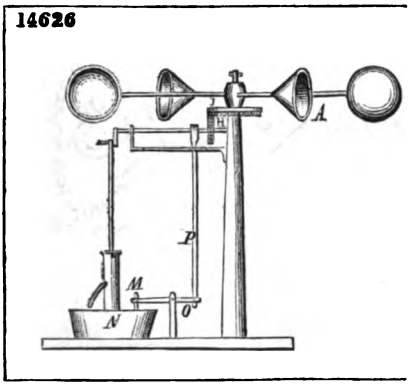

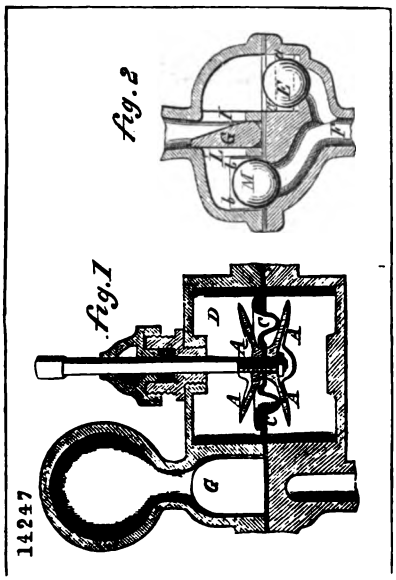

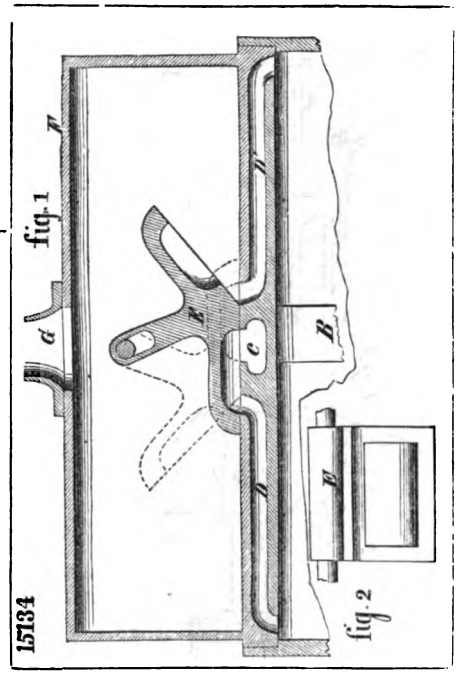

Digitized by Google

15263

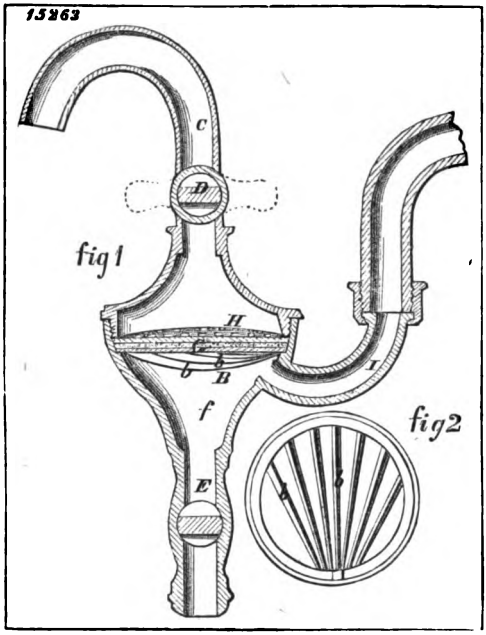

15027

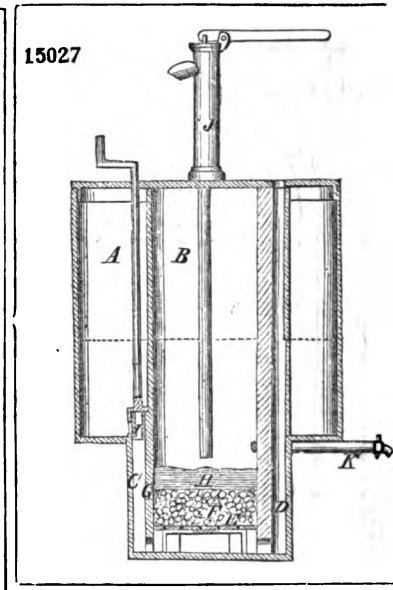

16284

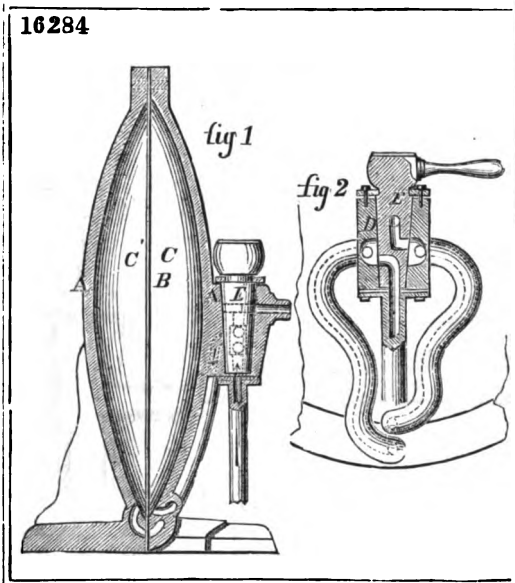

14982

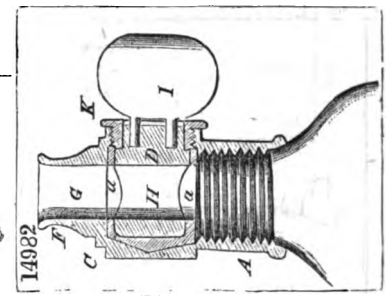

15646

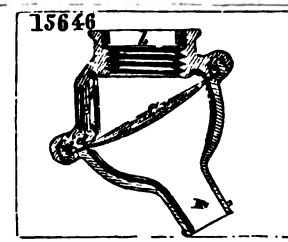

15463

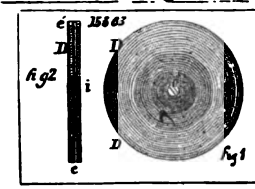

15430

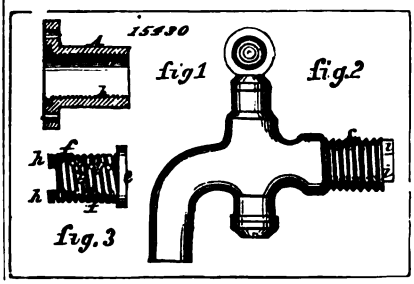

14693

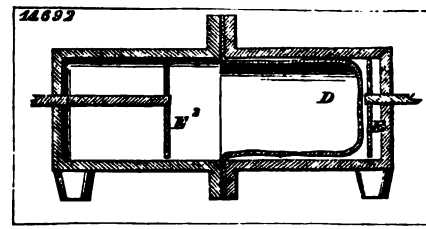

Digitized by Google

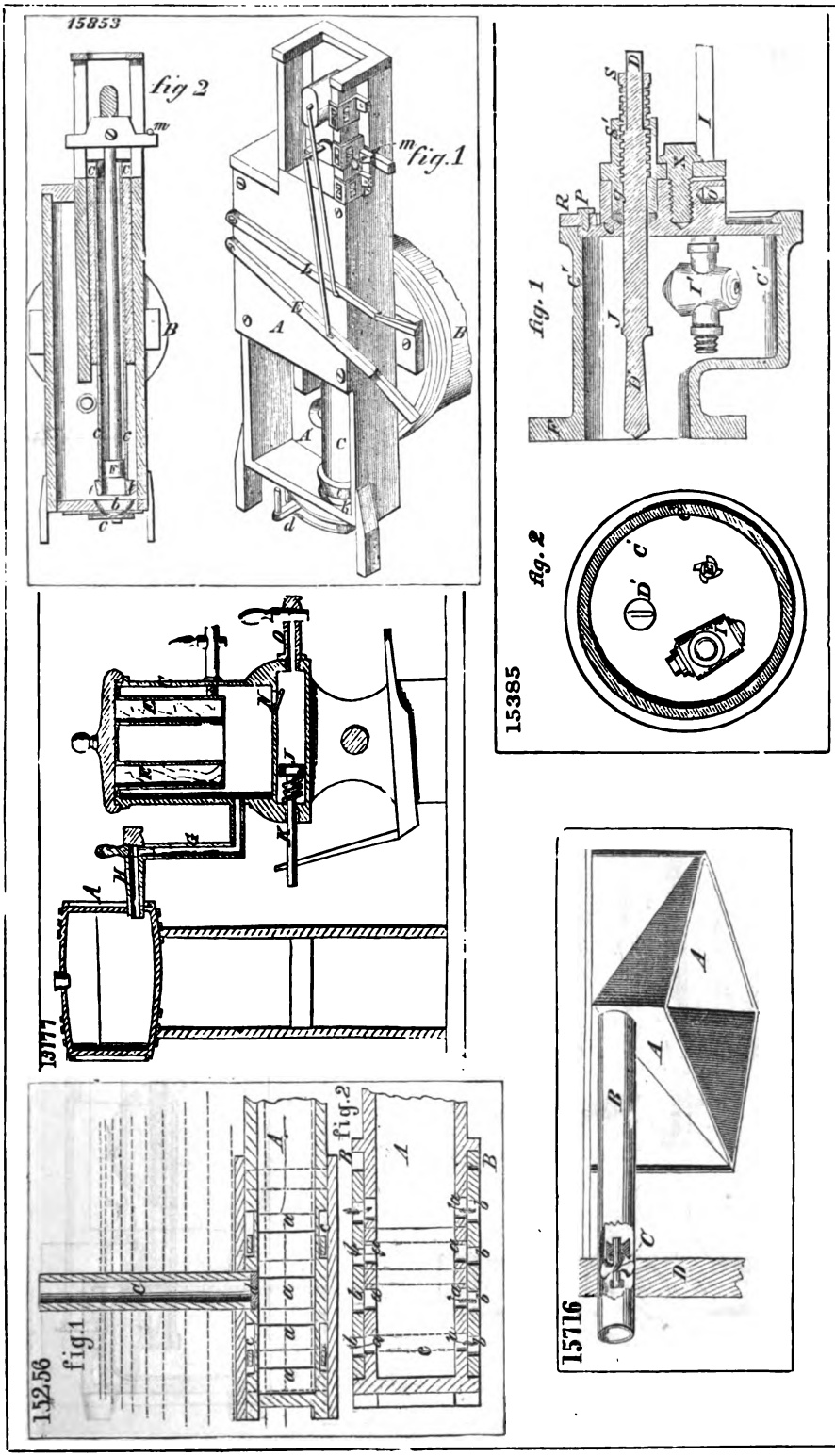

Digitized by Google

14602

fig.1

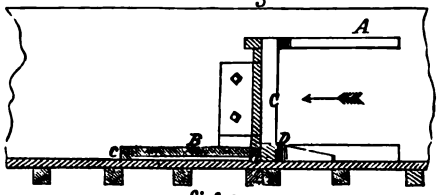

fig.2

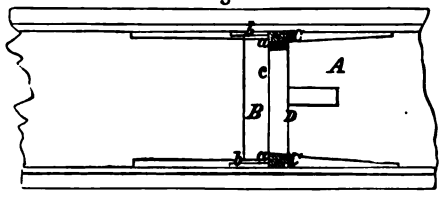

14090.

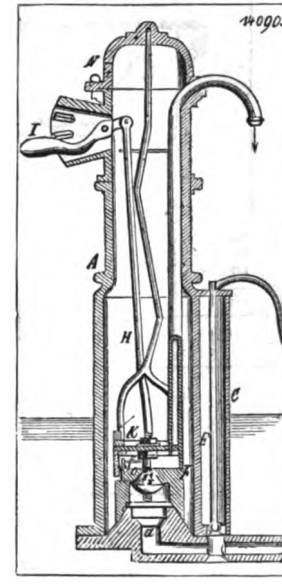

15846

fig.1

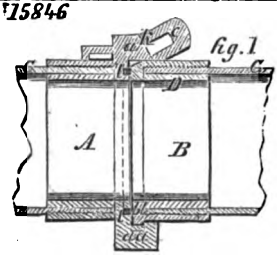

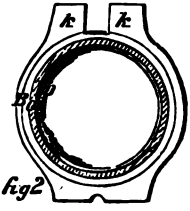

fig2

14557

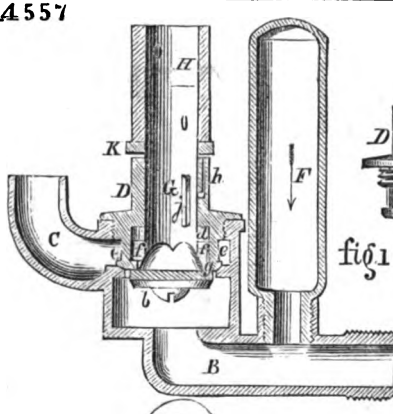

fig1

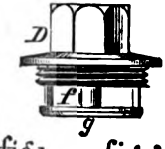

fig.3

fig.2

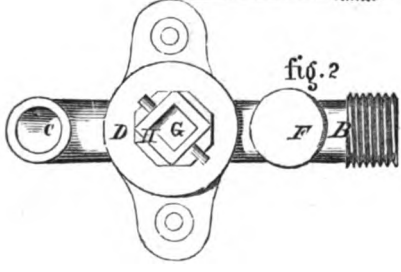

14805

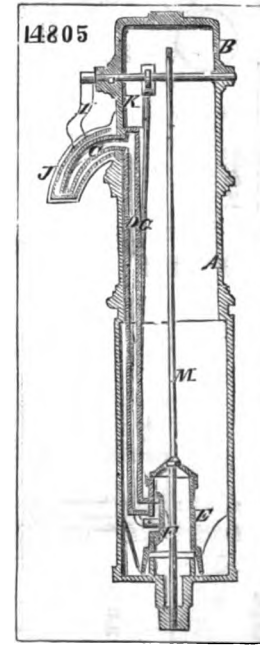

Digitized by Google

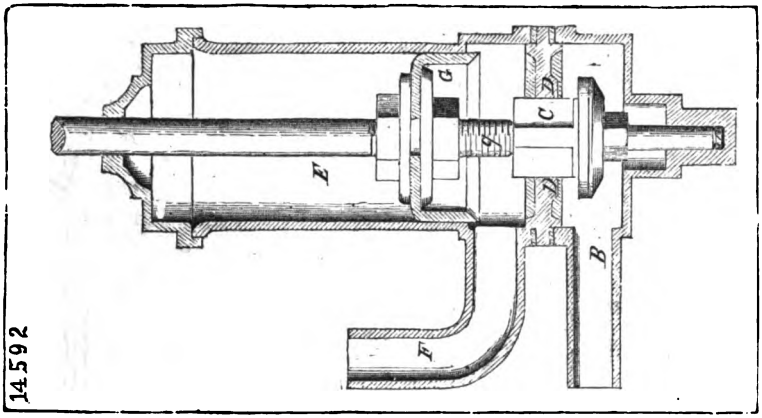

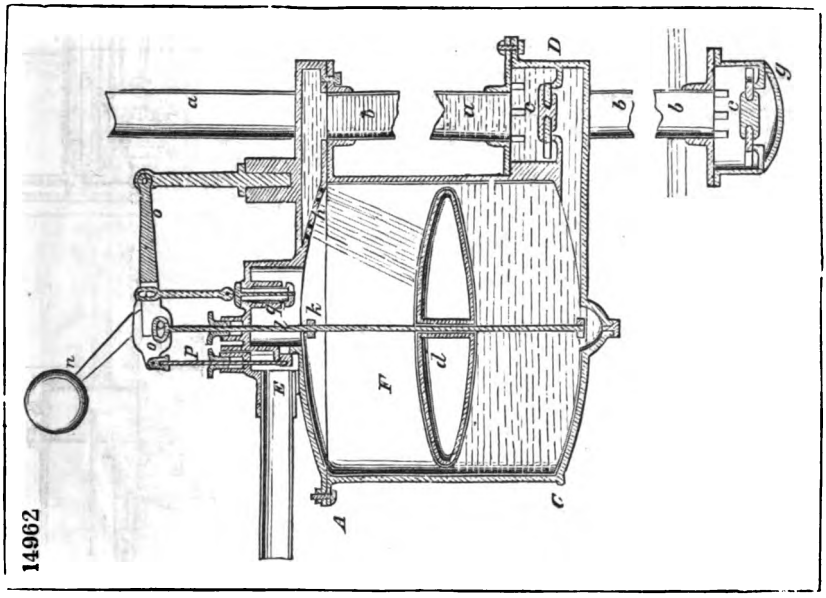

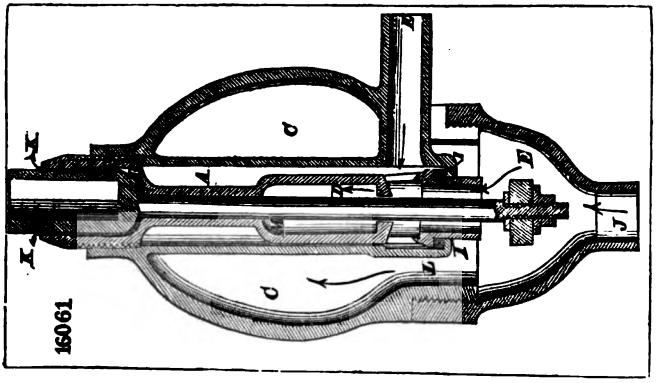

Digitized by Google

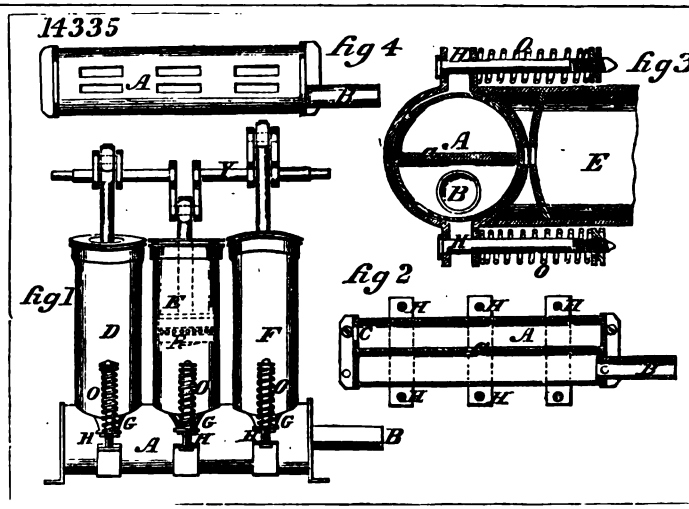

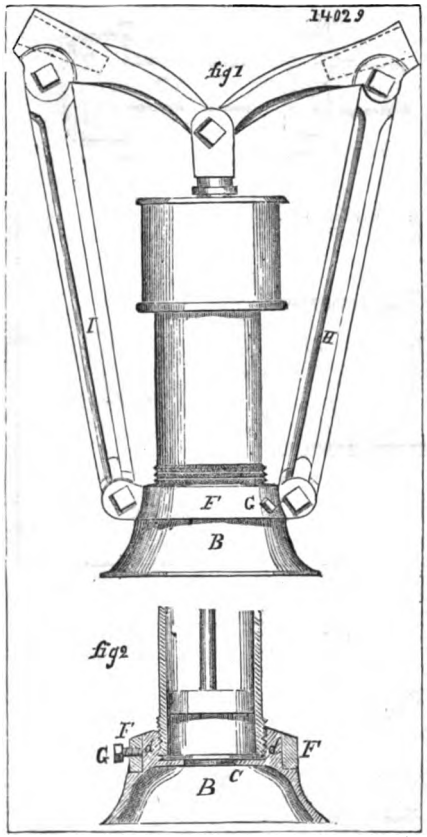

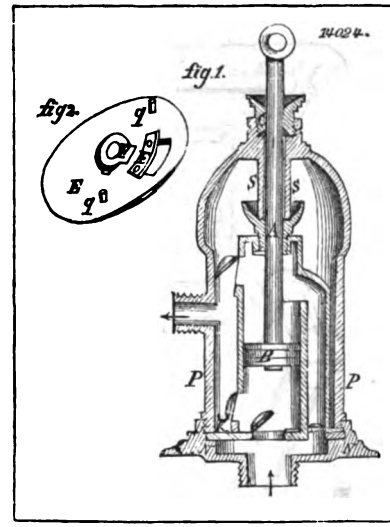

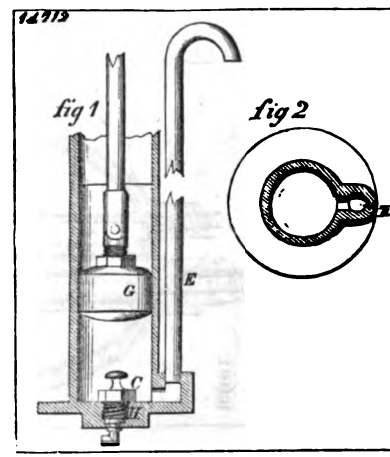

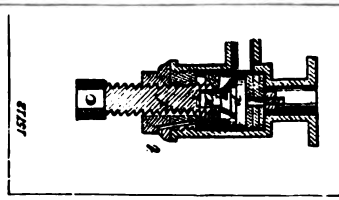

Digitized by Google

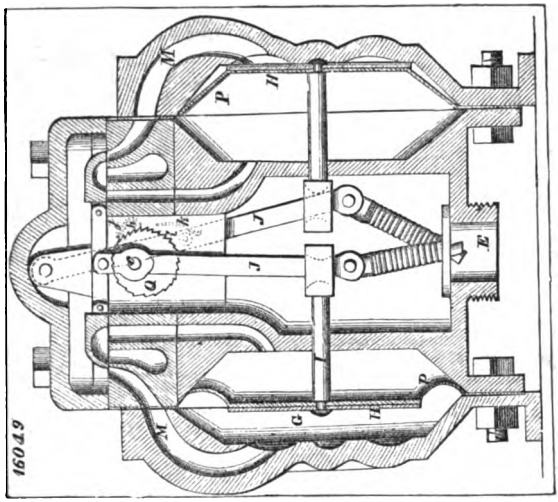
16049

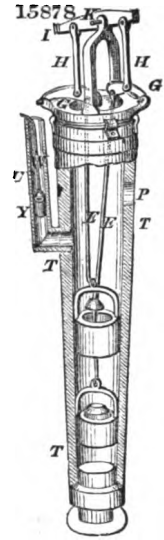
15878

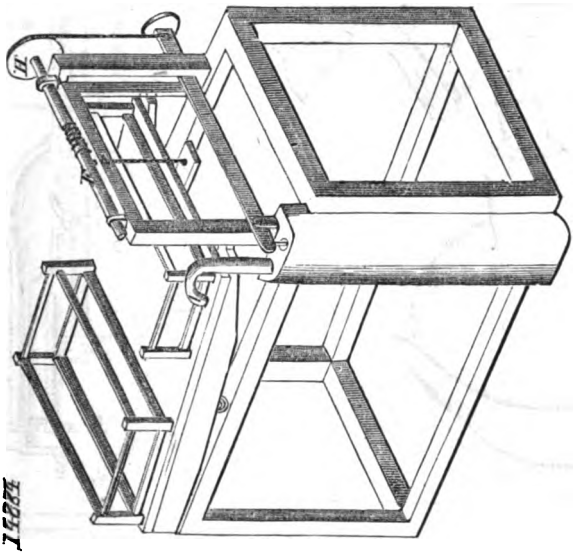
14271

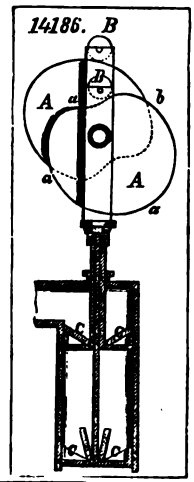
14186.

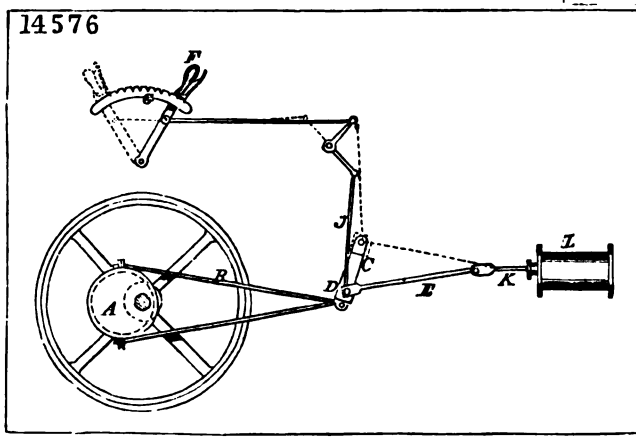
14576

15888

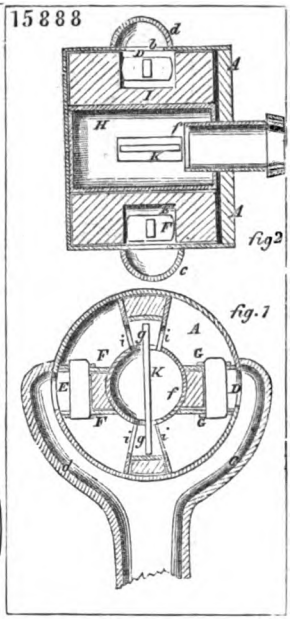

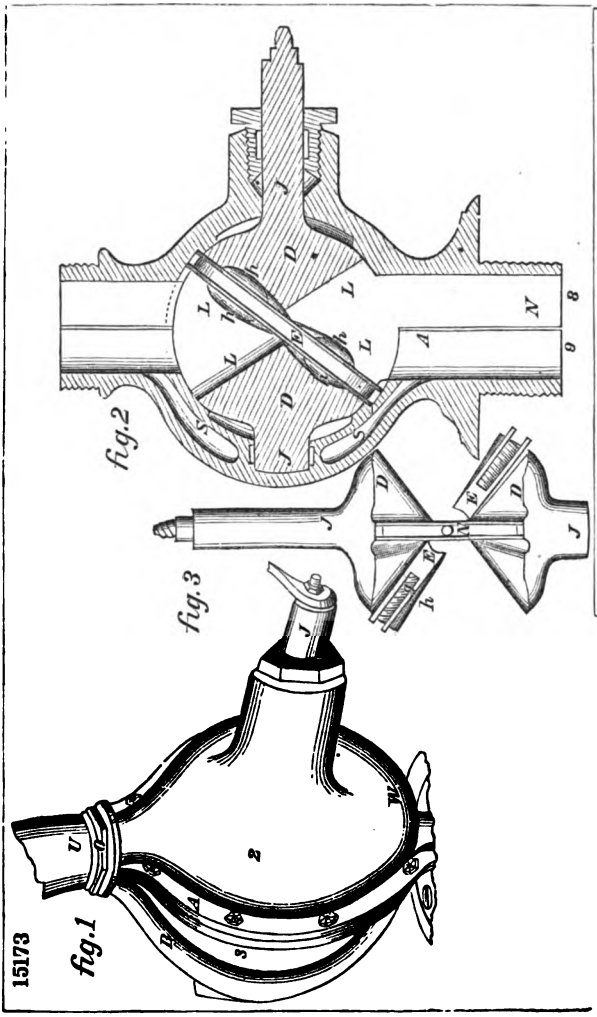

15173

14039

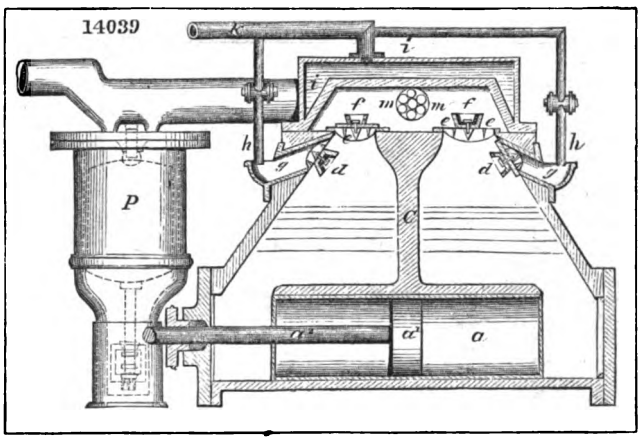

15922

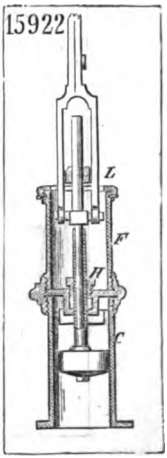

Digitized by Google

16229

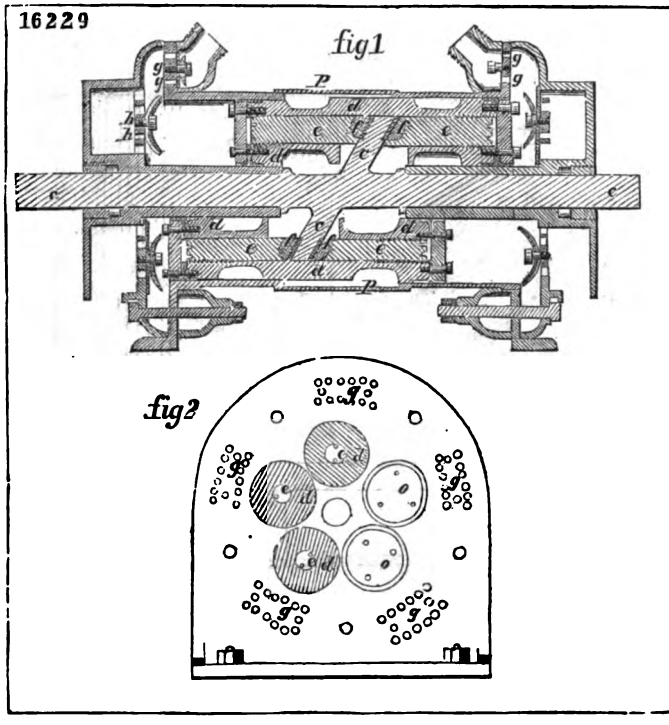

14372

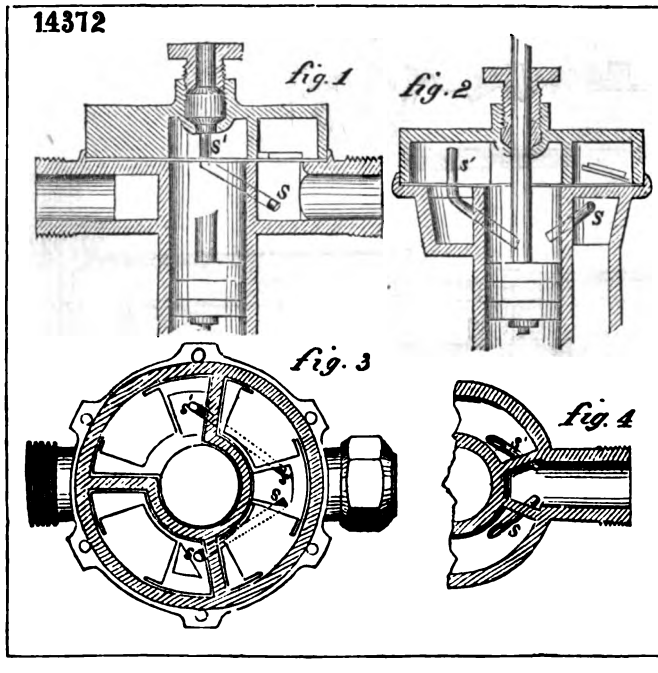

Digitized by Google

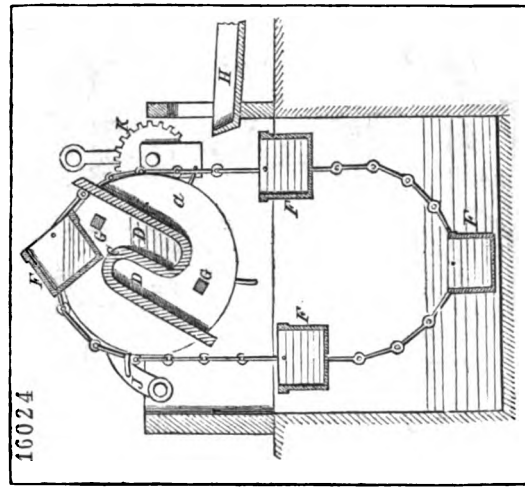

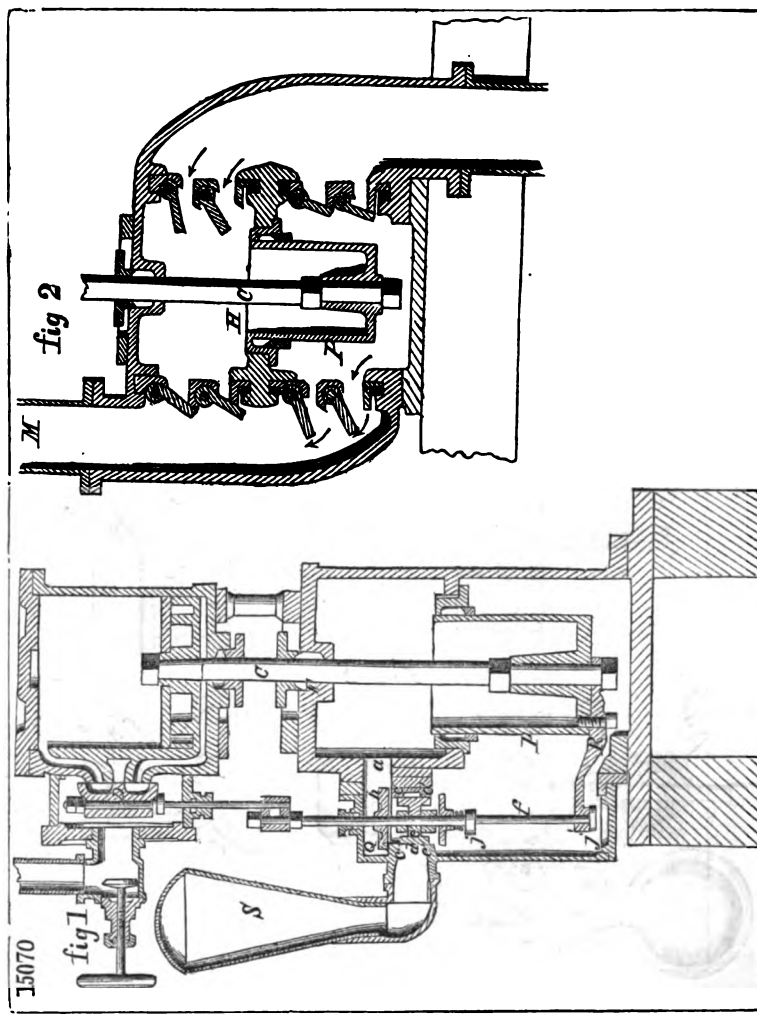

Digitized by Google

14599

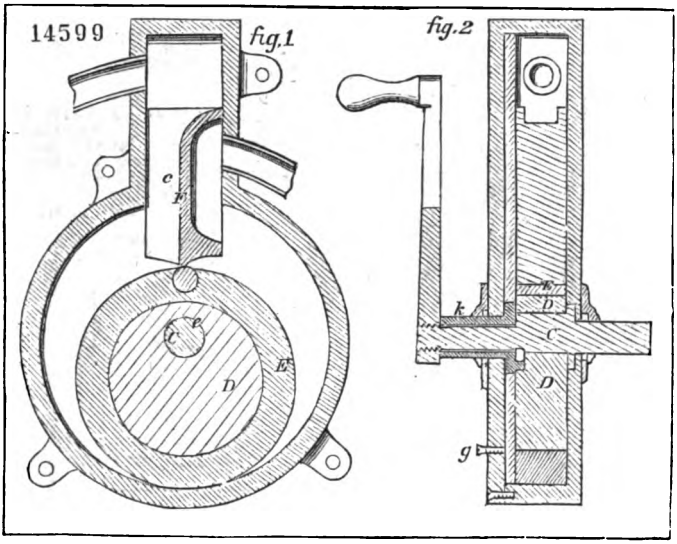

14626

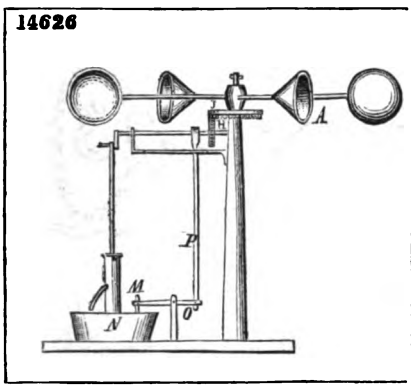

14247

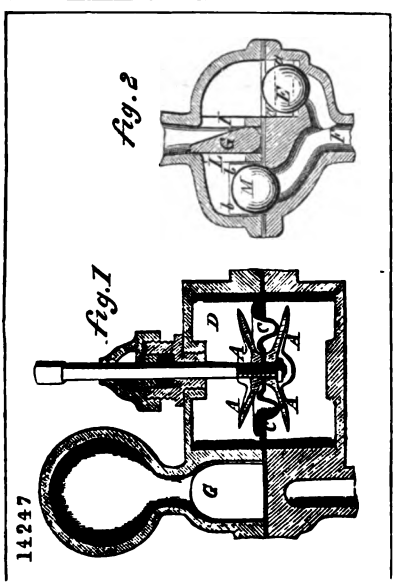

15134

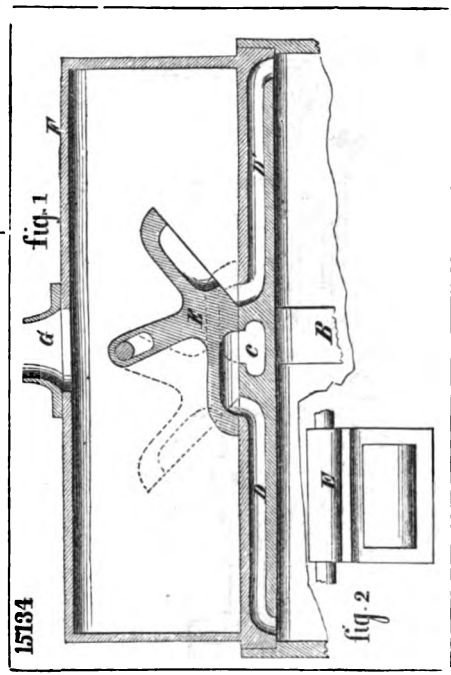

Digitized by Google

15059

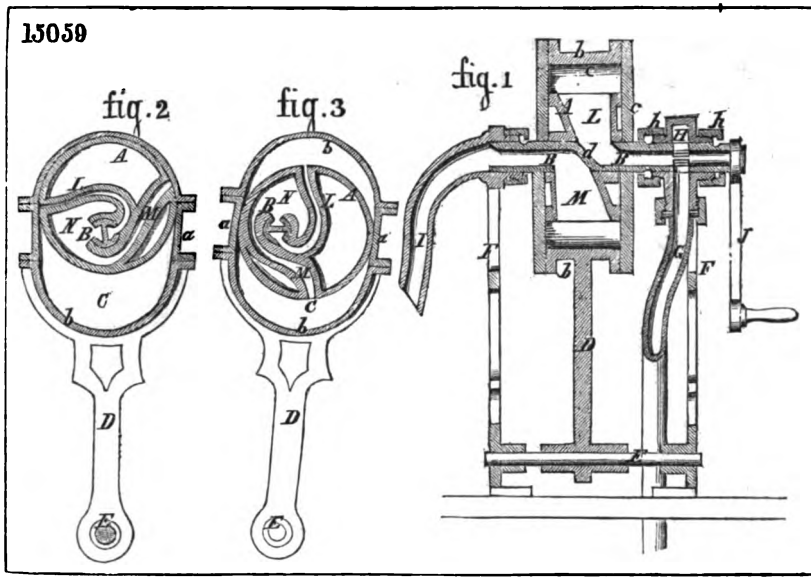

15221

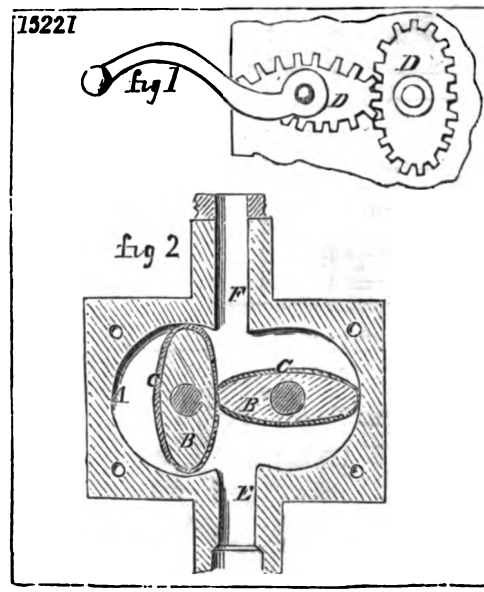

15211

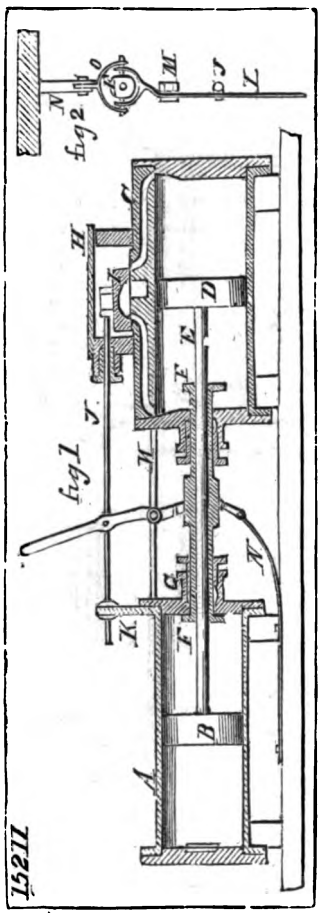

15280

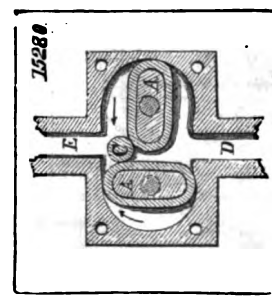

Digitized by Google

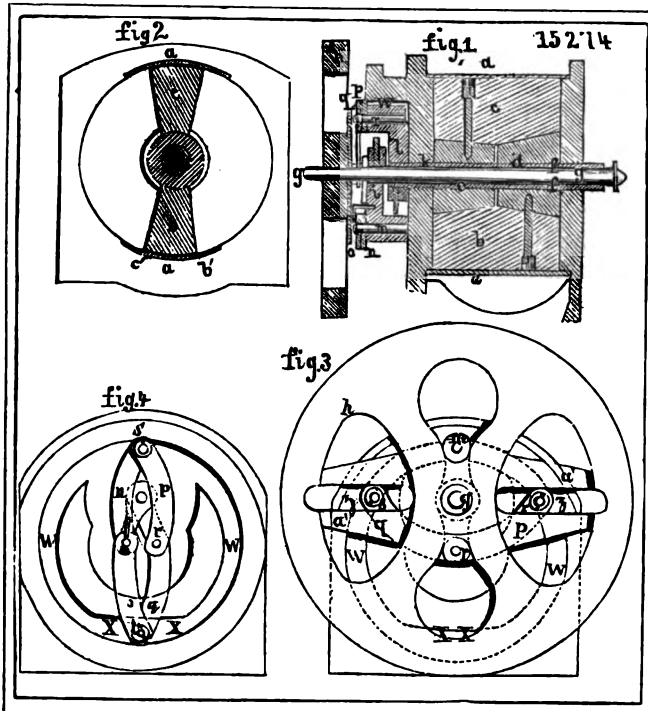

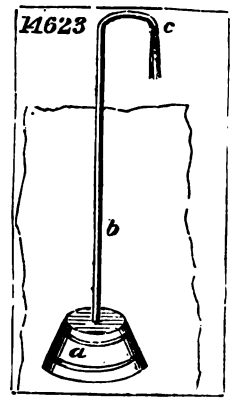

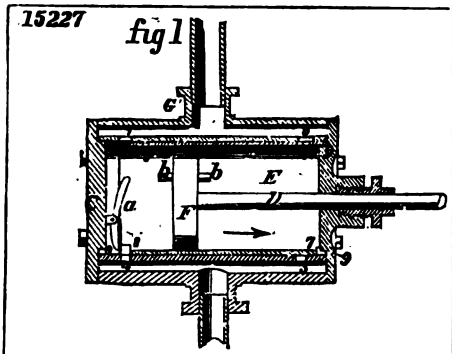

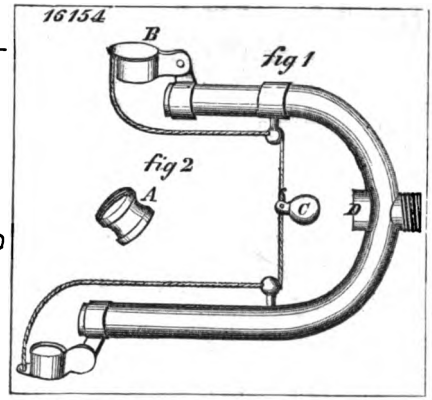

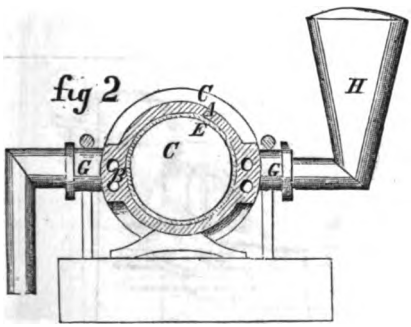

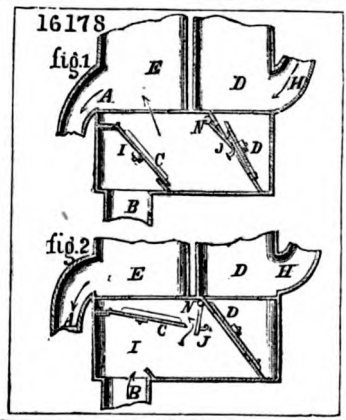

Digitized by Google

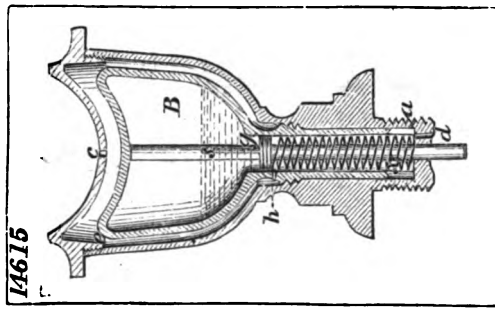

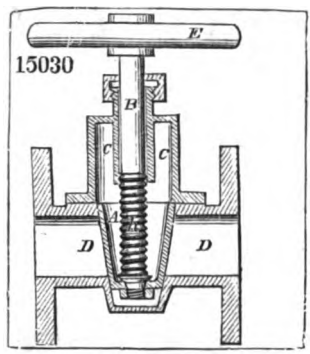

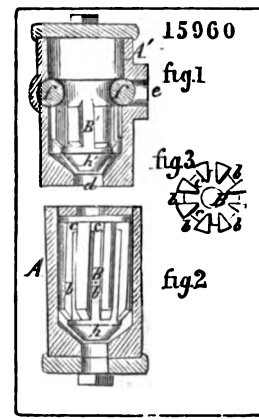

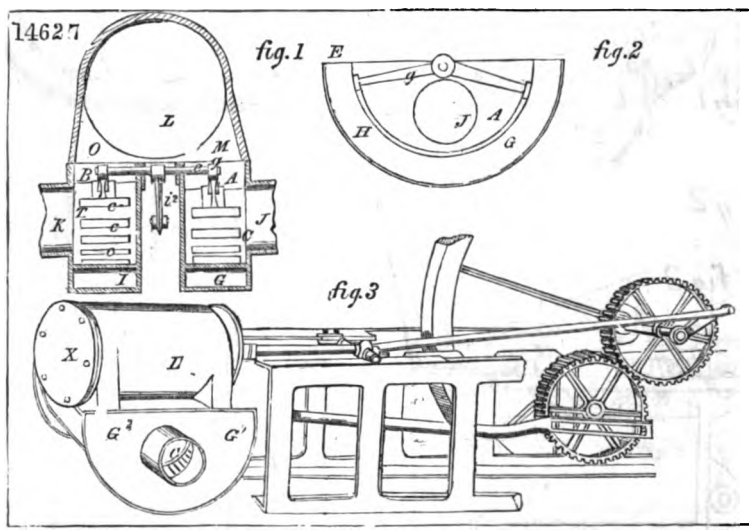

Digitized by Google

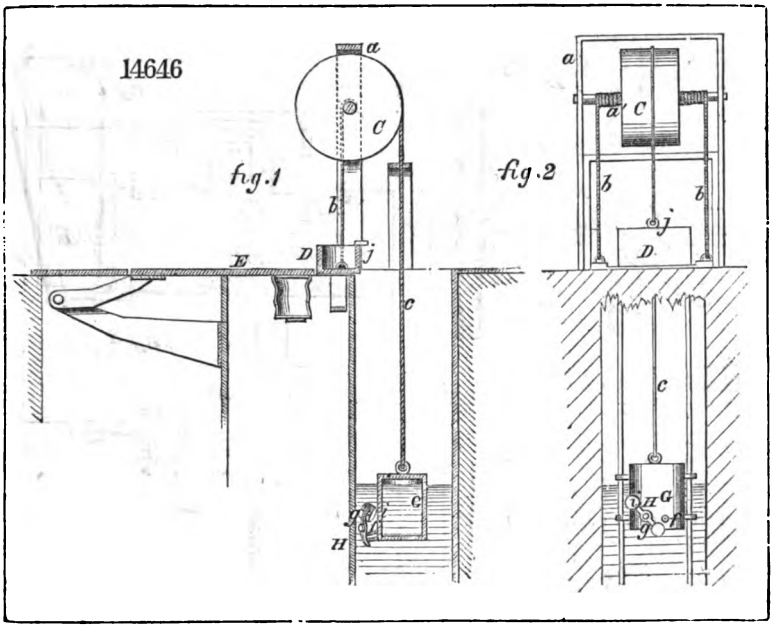

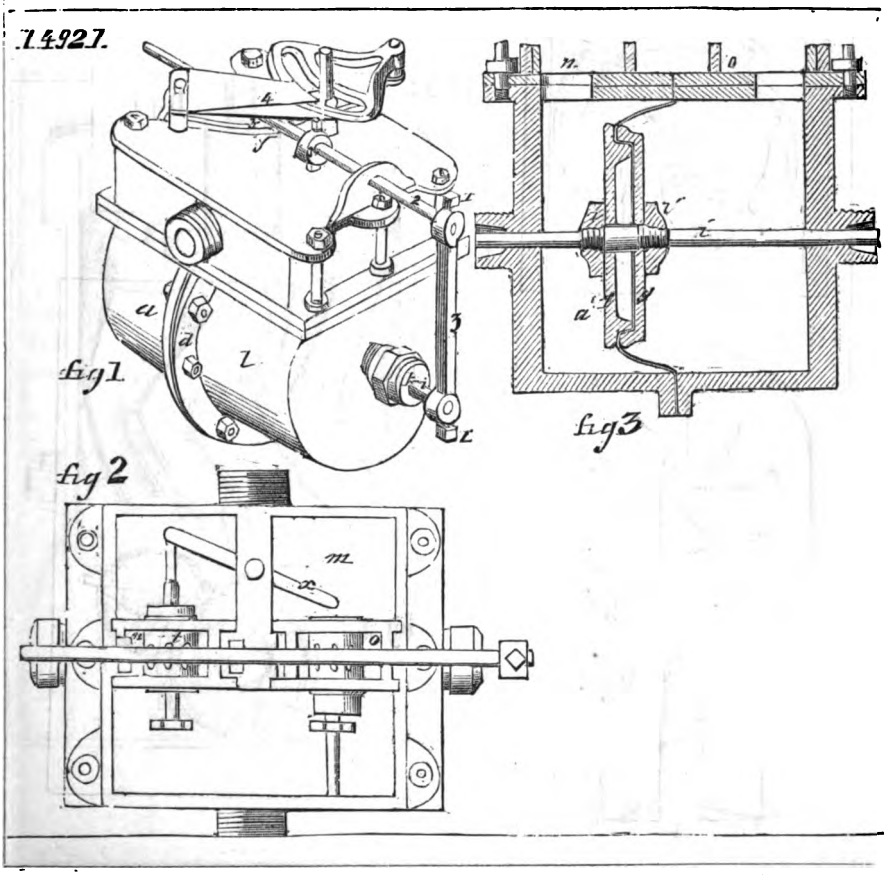

Digitized by Google

16235

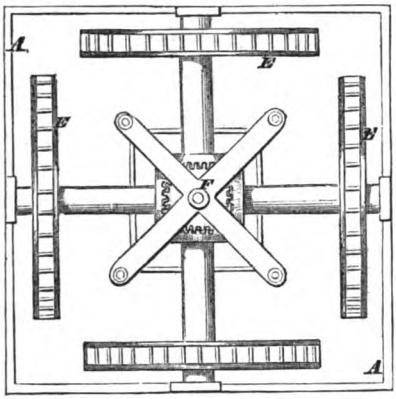

14525

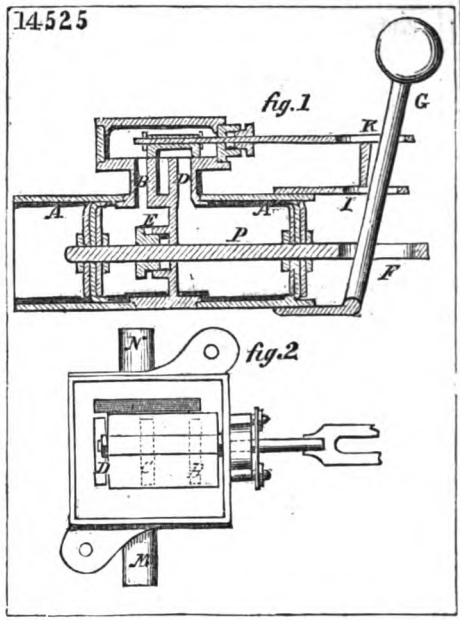

15977

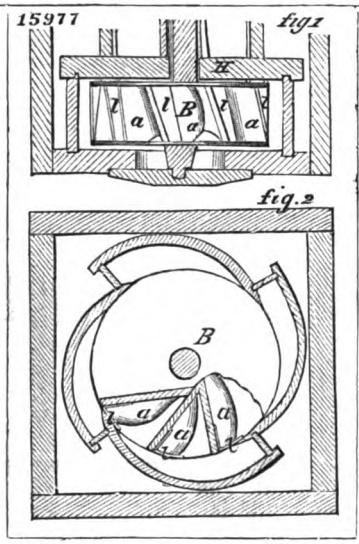

14882

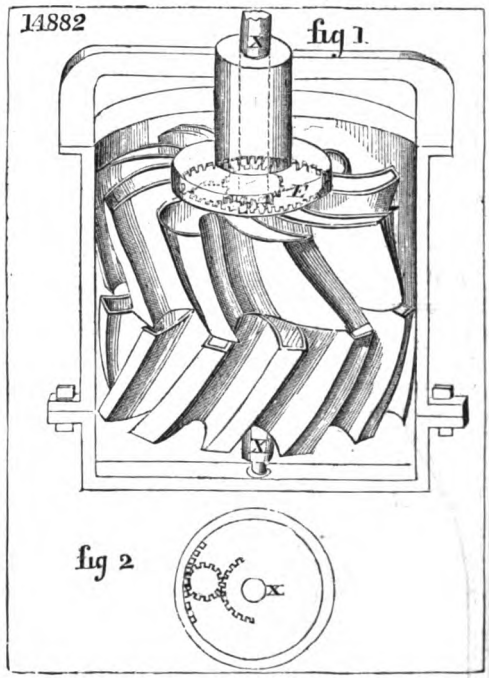

14535

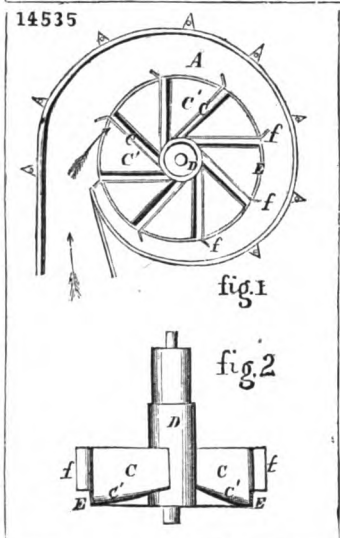

Digitized by Google

15309

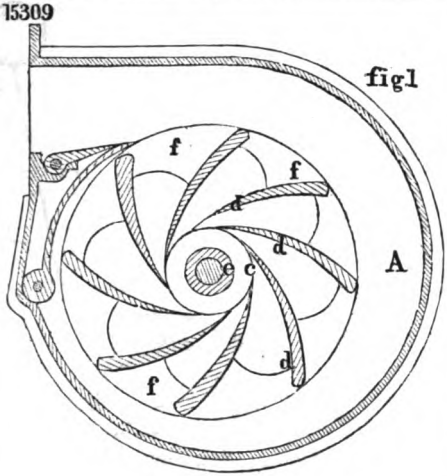

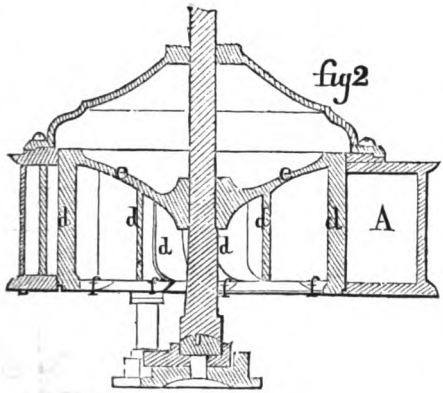

16027

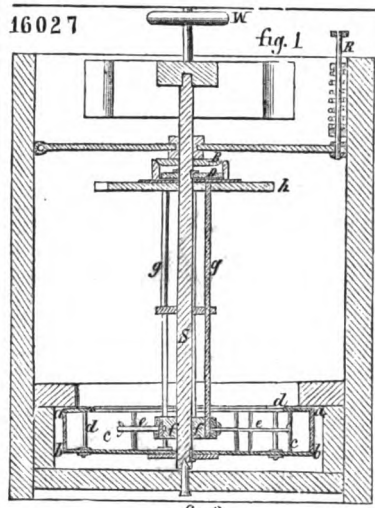

fig. 2

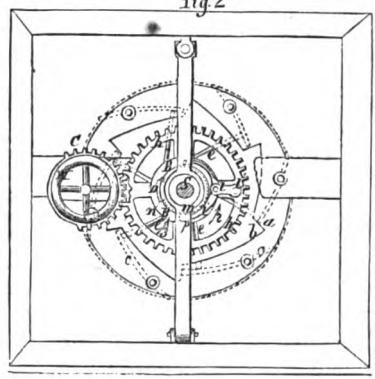

15384

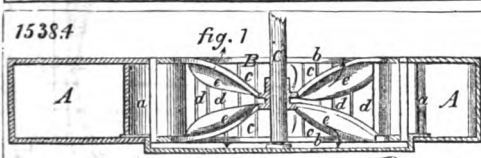

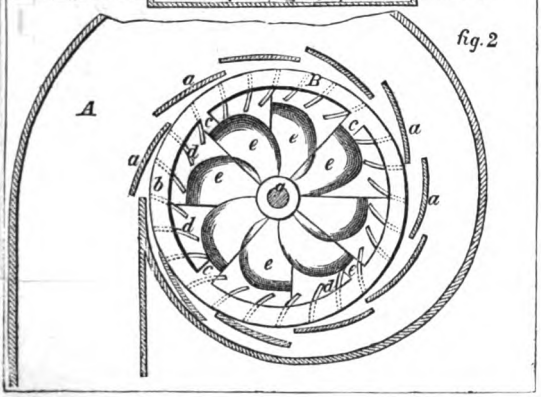

15597

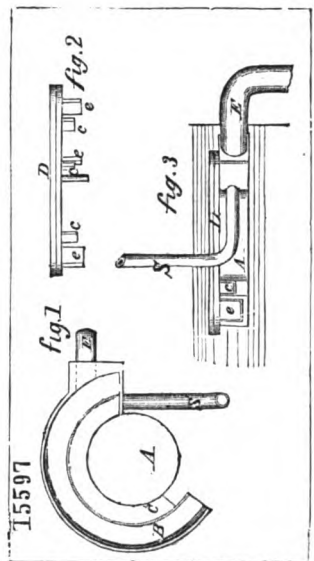

Digitized by Google

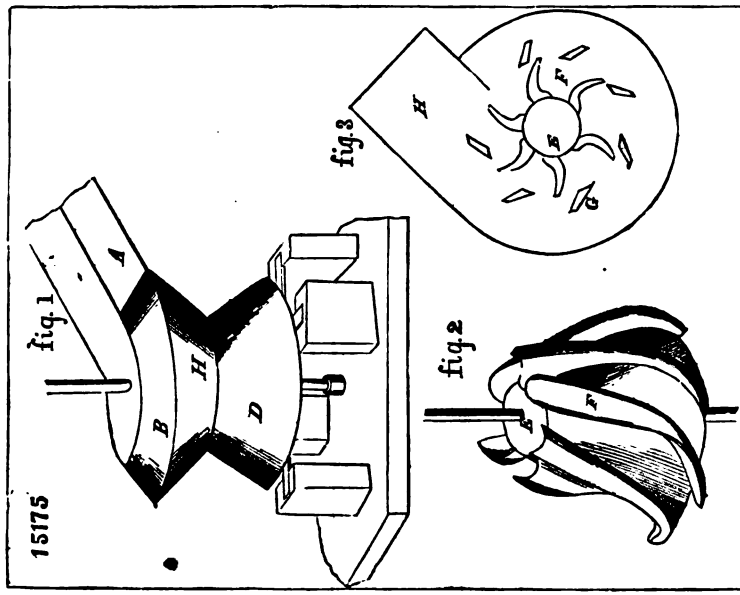

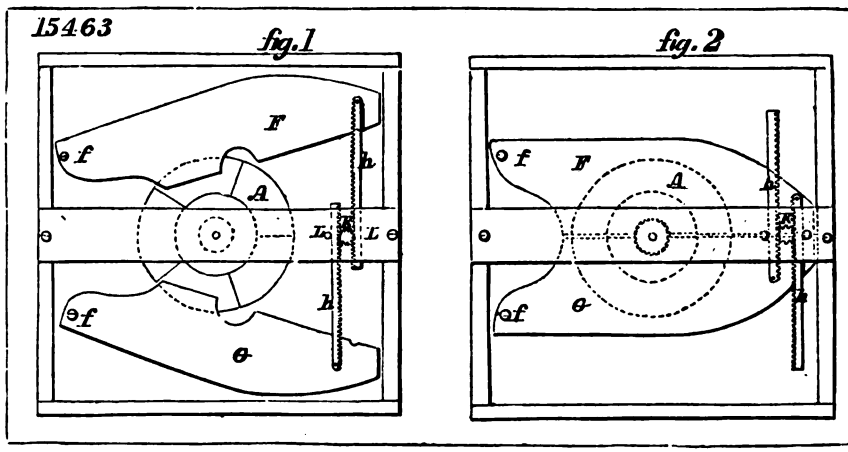

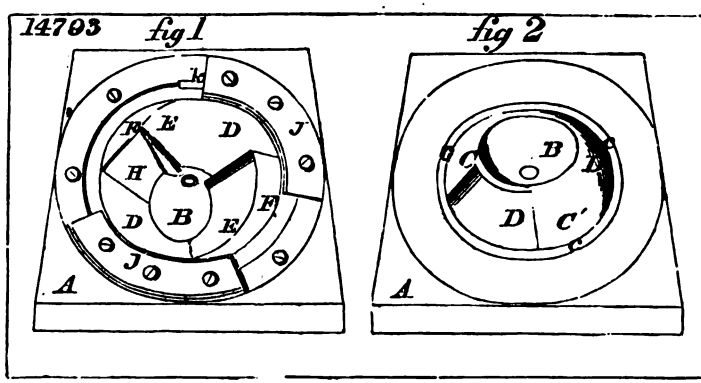

Digitized by Google

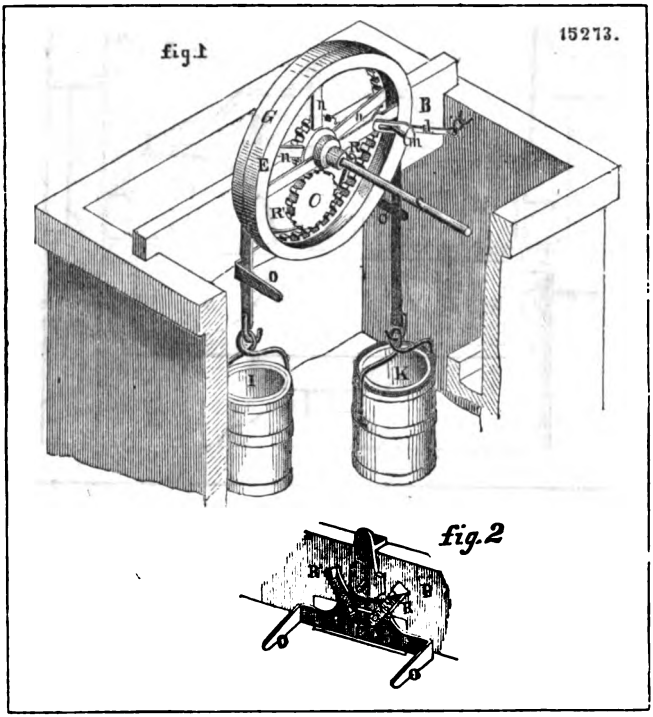

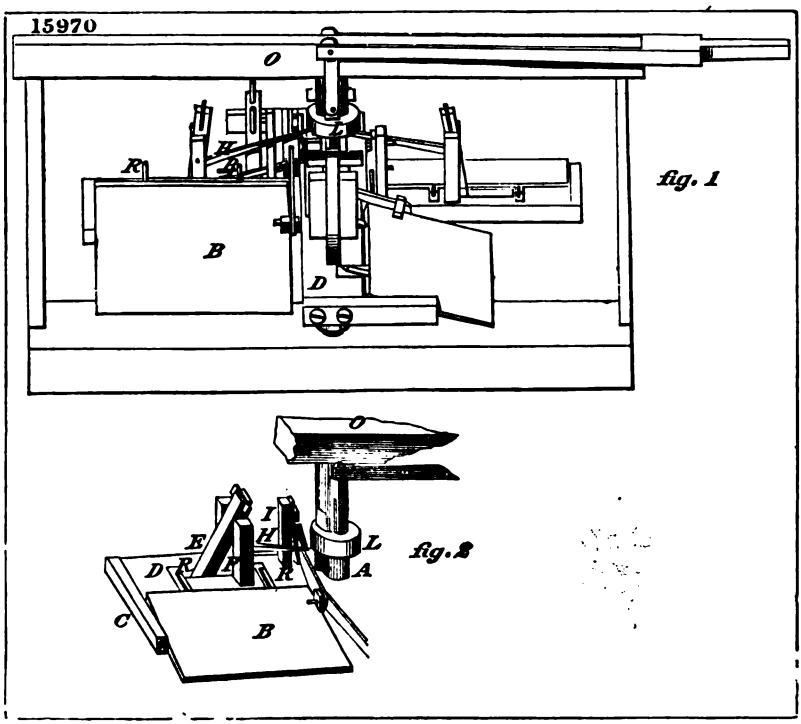

Digitized by Google

16110

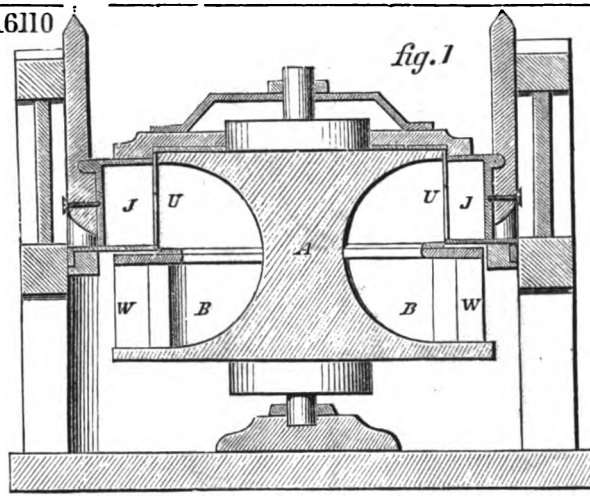

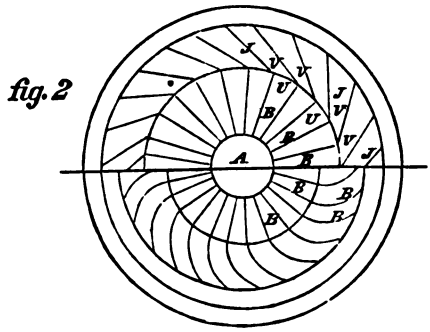

15709

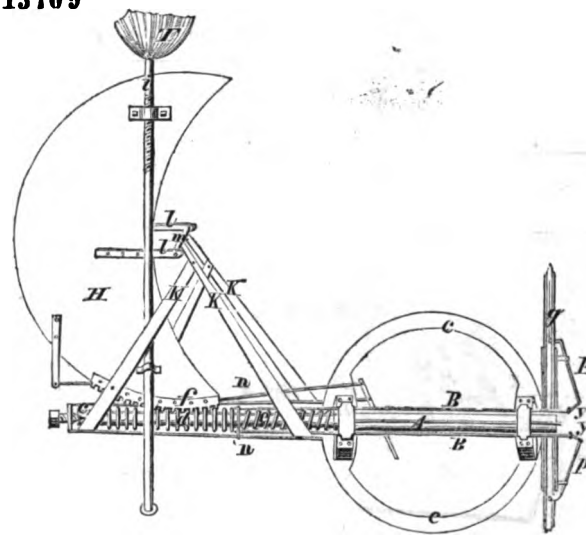

Digitized by Google

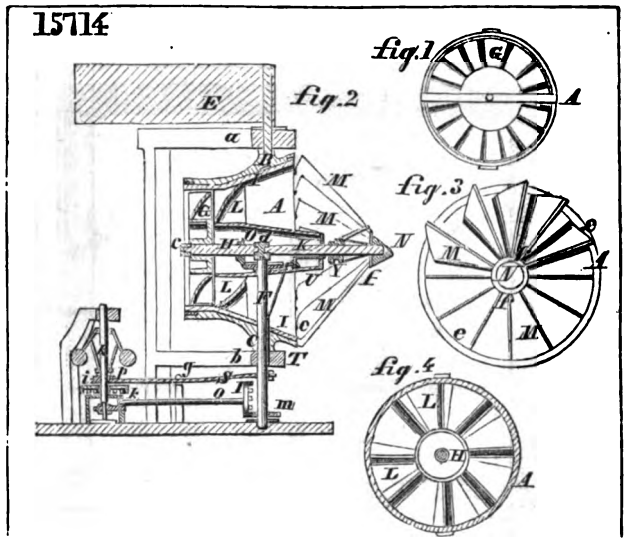

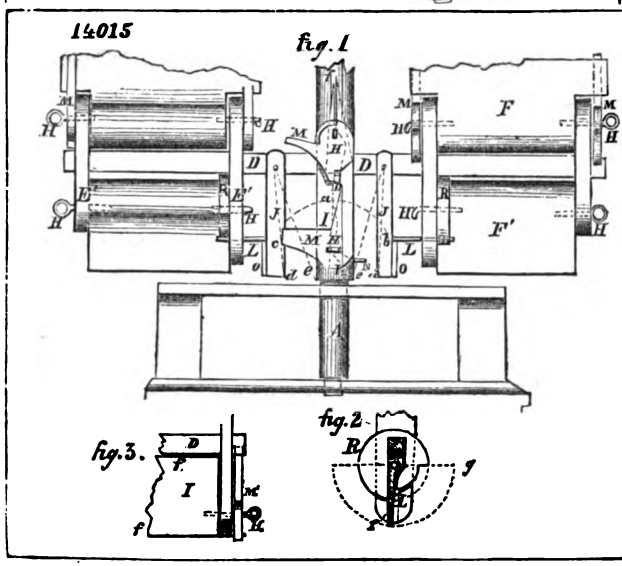

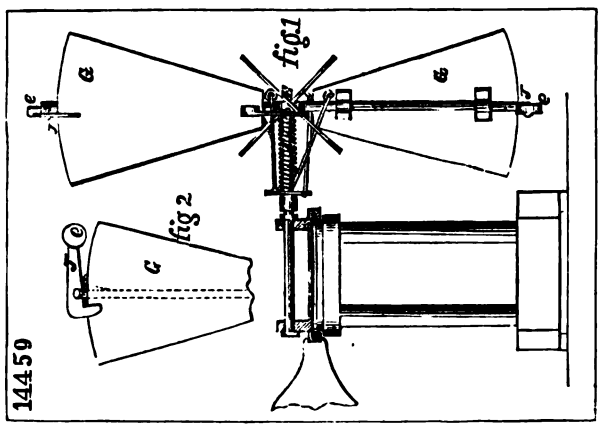

Digitized by Google

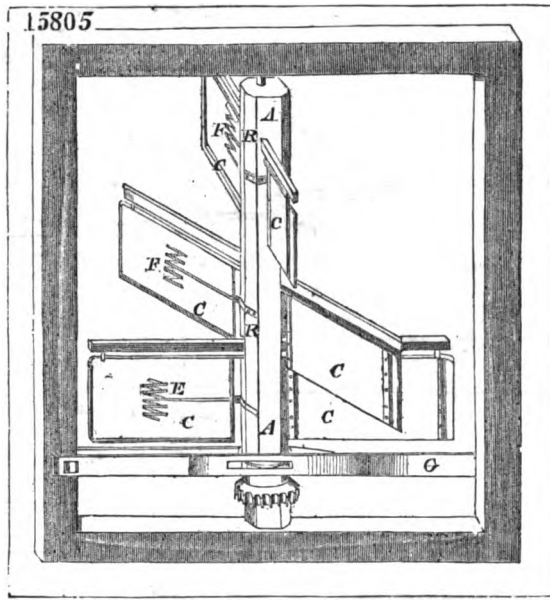

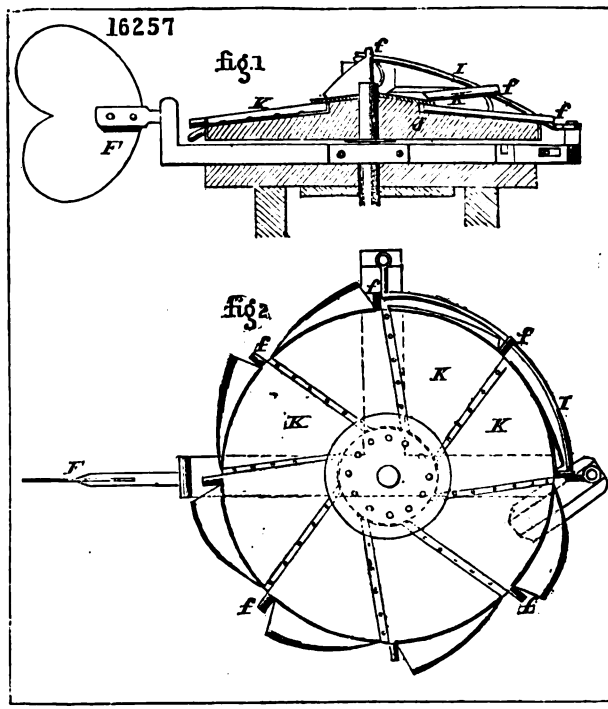

Digitized by Google

14808

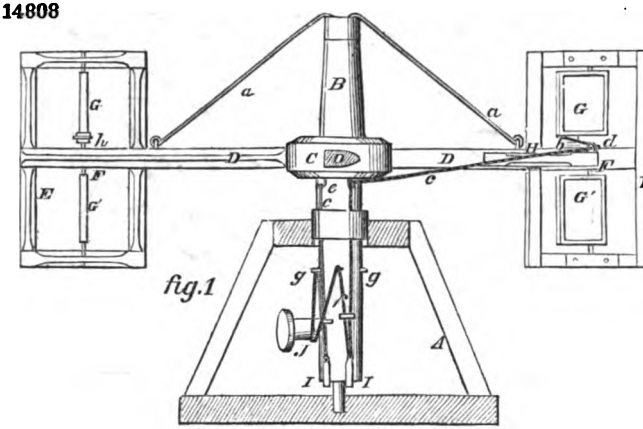

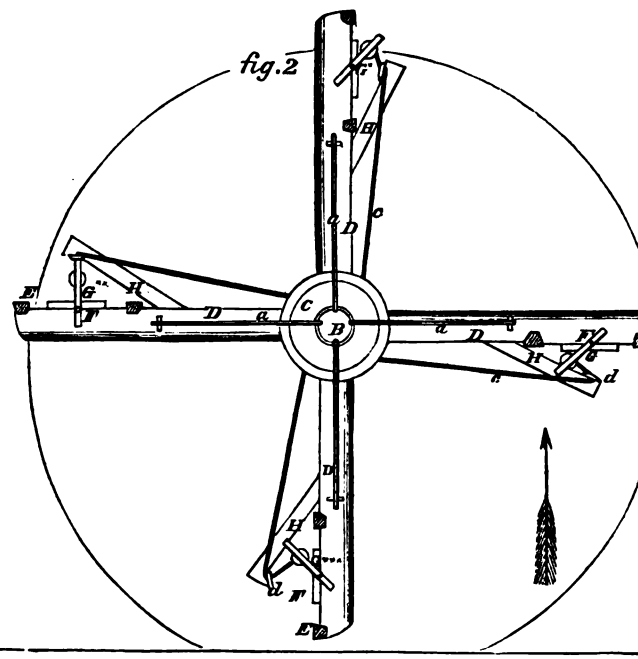

Digitized by Google

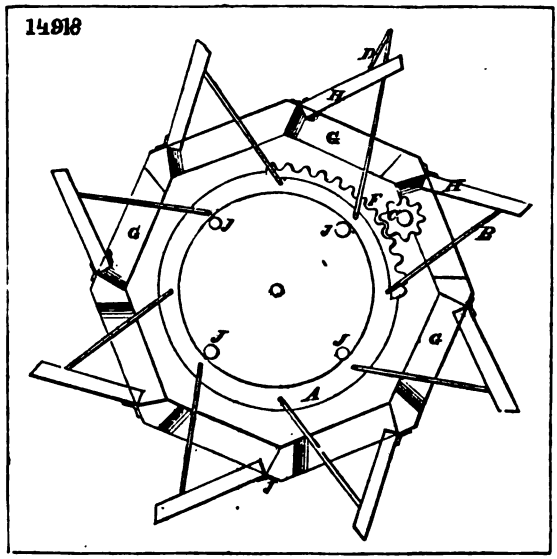

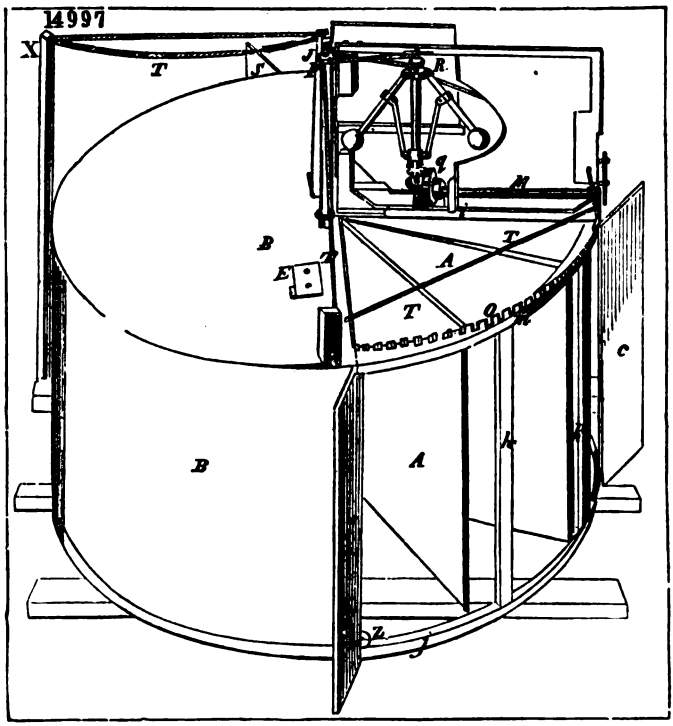

Digitized by Google

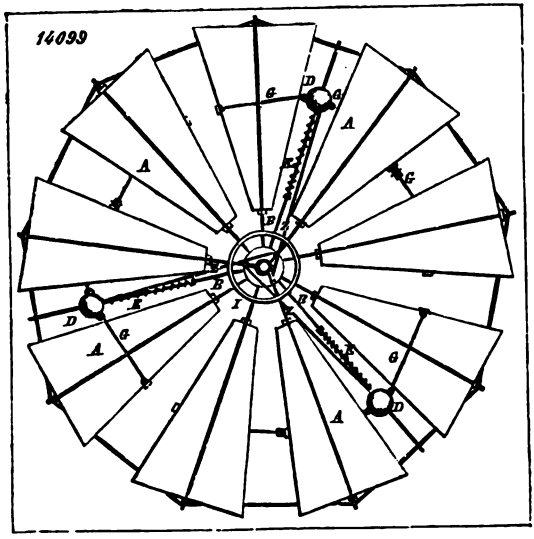

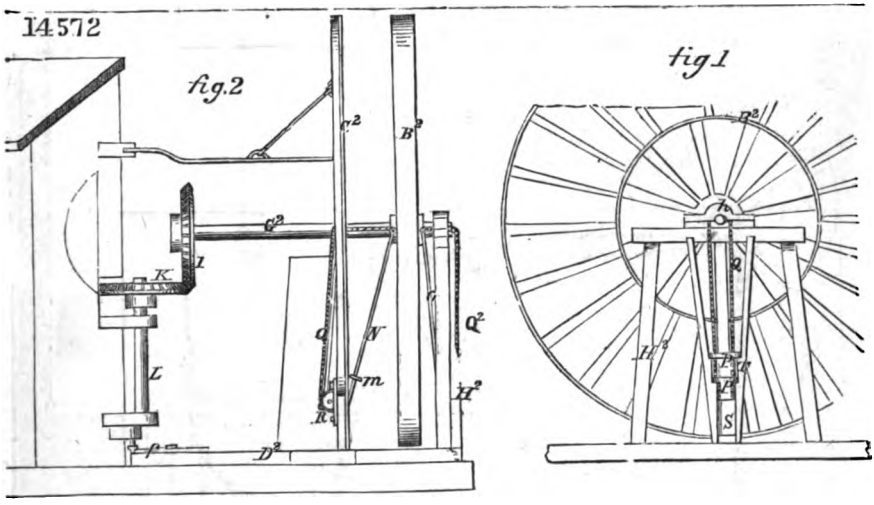

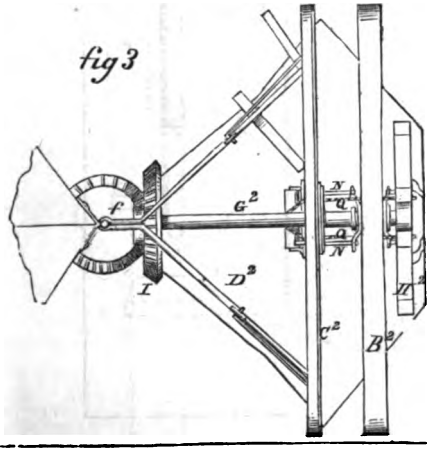

Digitized by Google

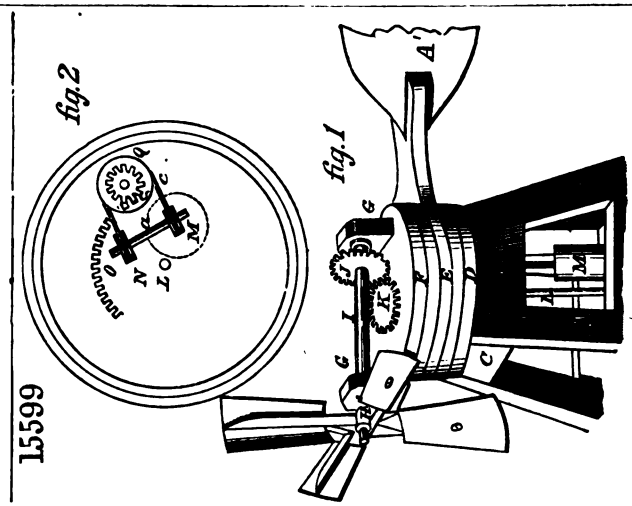
15599
fig.2
fig.1

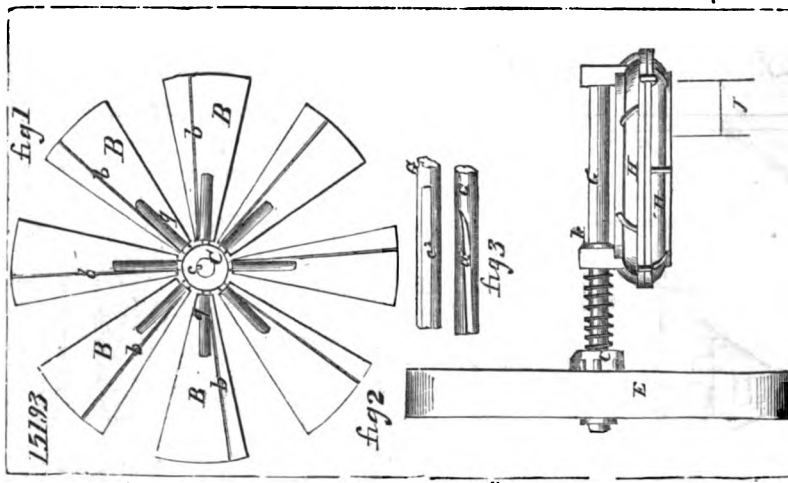
15193
fig1
fig2
fig3

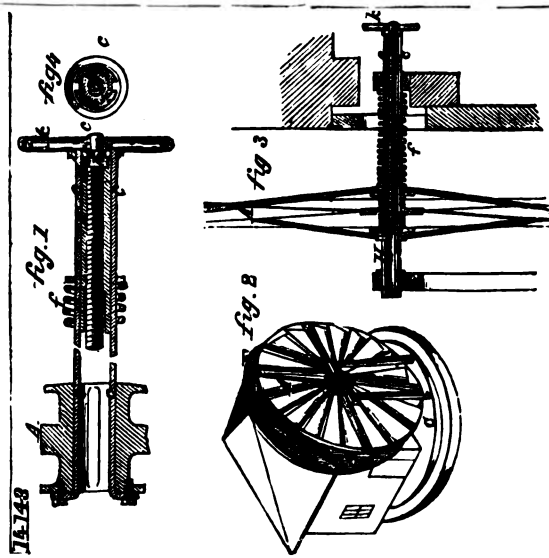
14-143
fig.1
fig.4
fig 3
fig.2

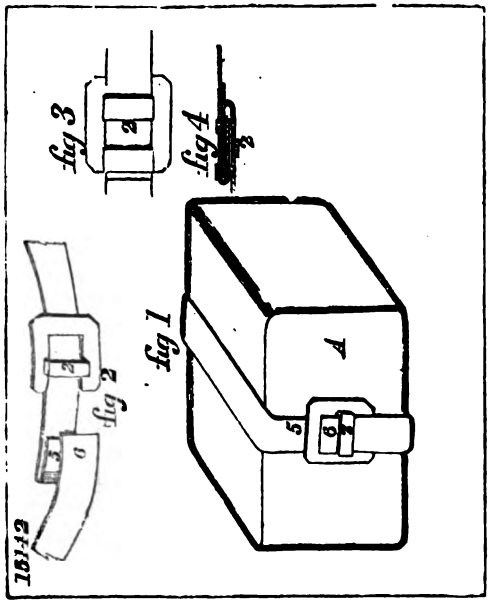

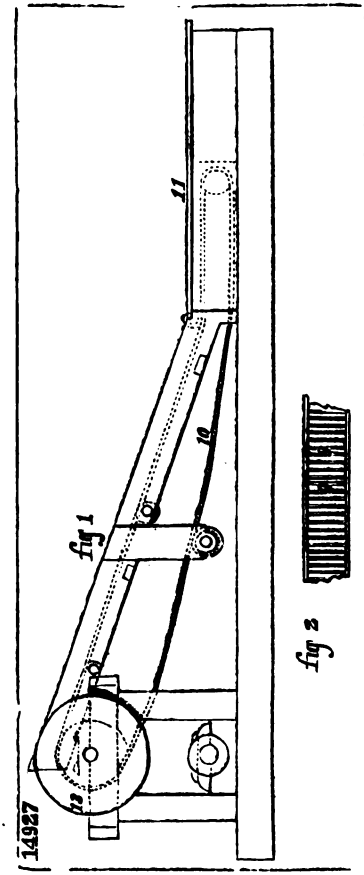

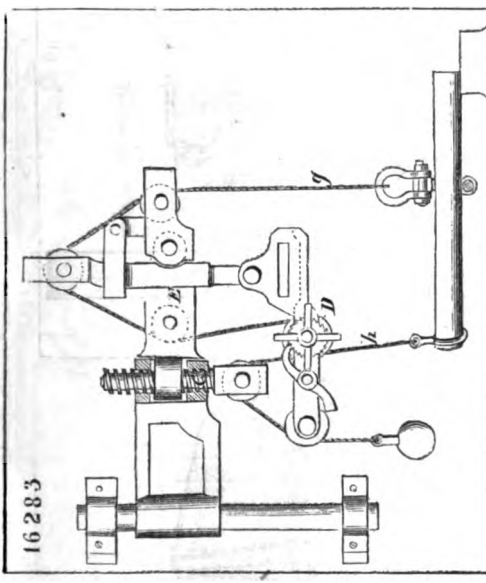

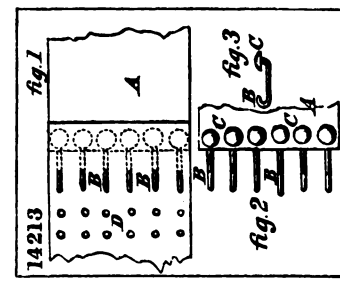

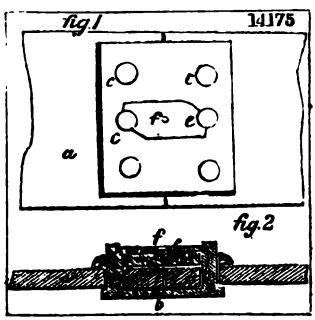

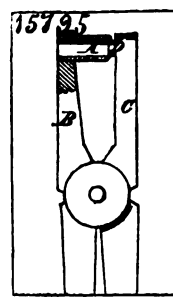

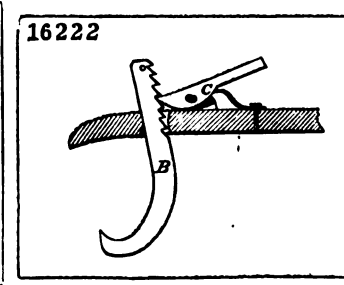

Digitized by Google

14170

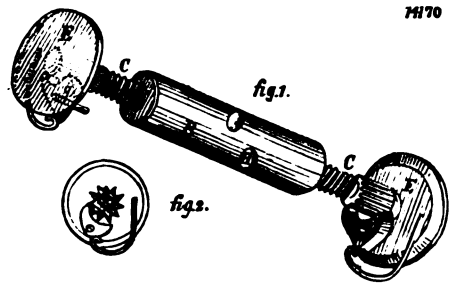

14666

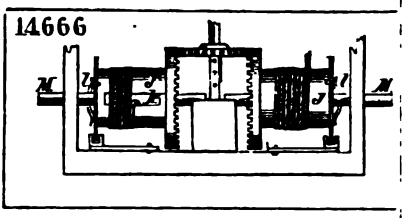

14671

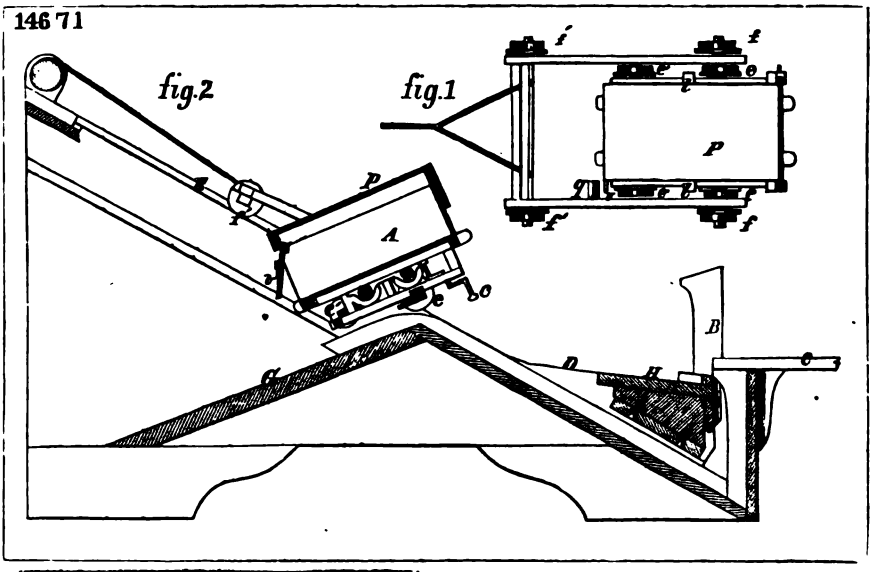

16233

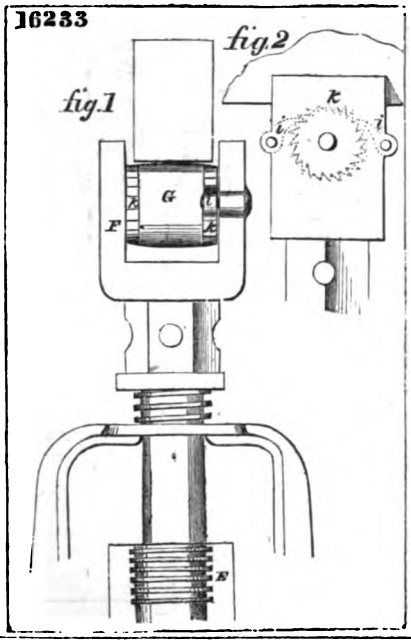

14282

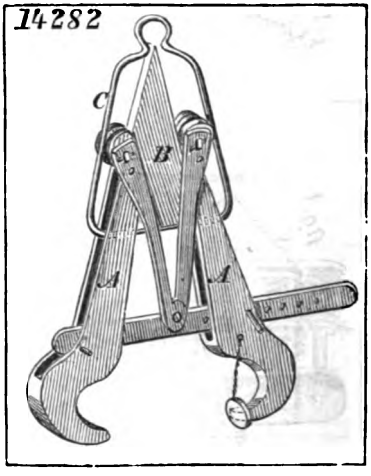

Digitized by Google

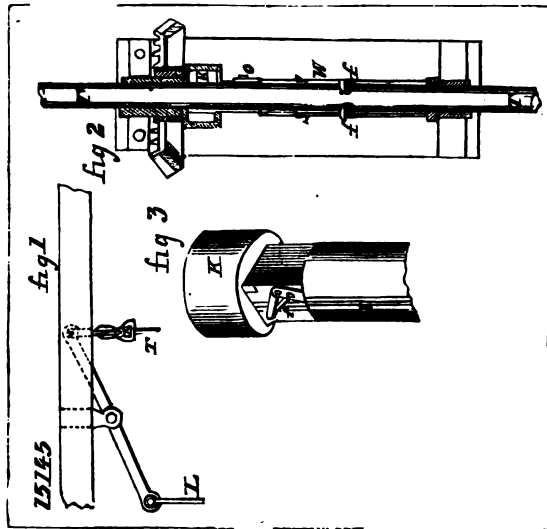

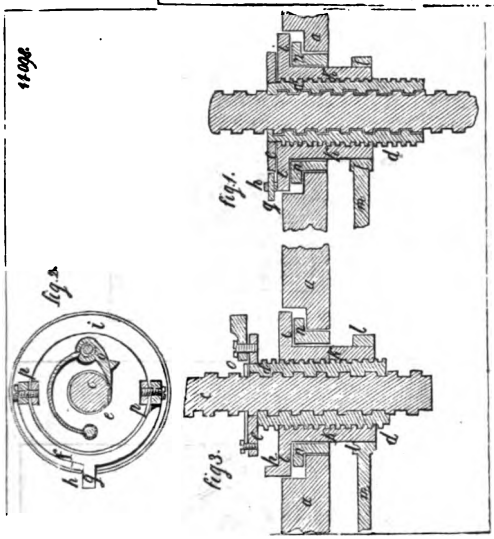

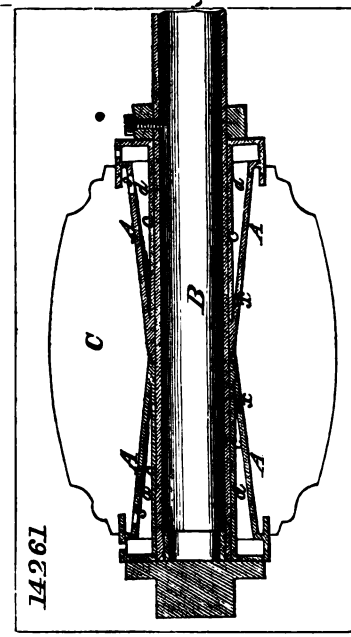

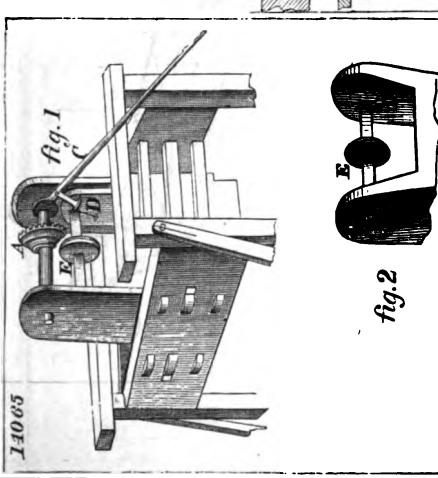

Digitized by Google

14170

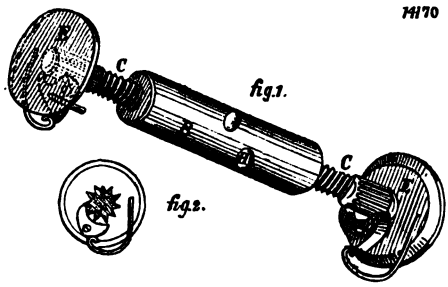

14666

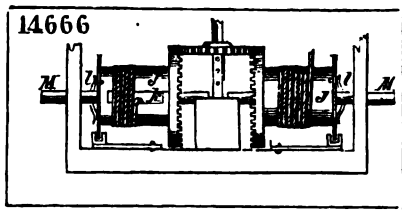

14671

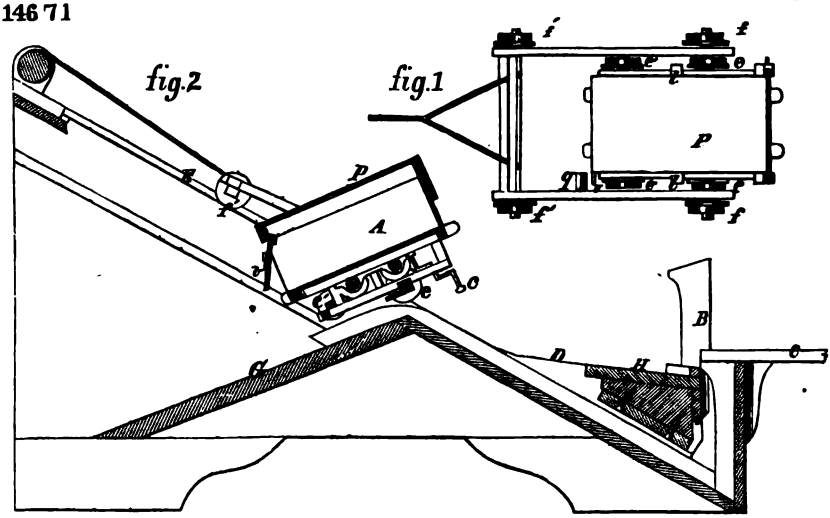

16233

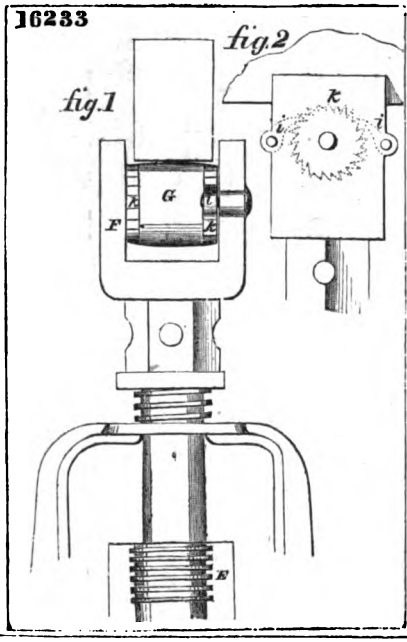

14282

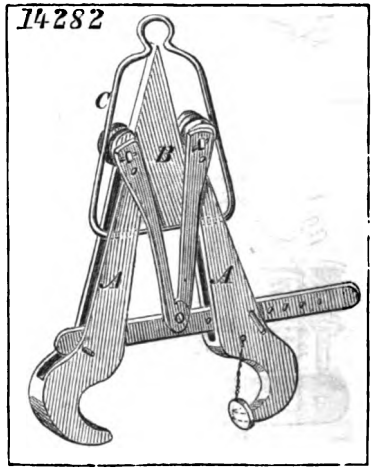

Digitized by Google

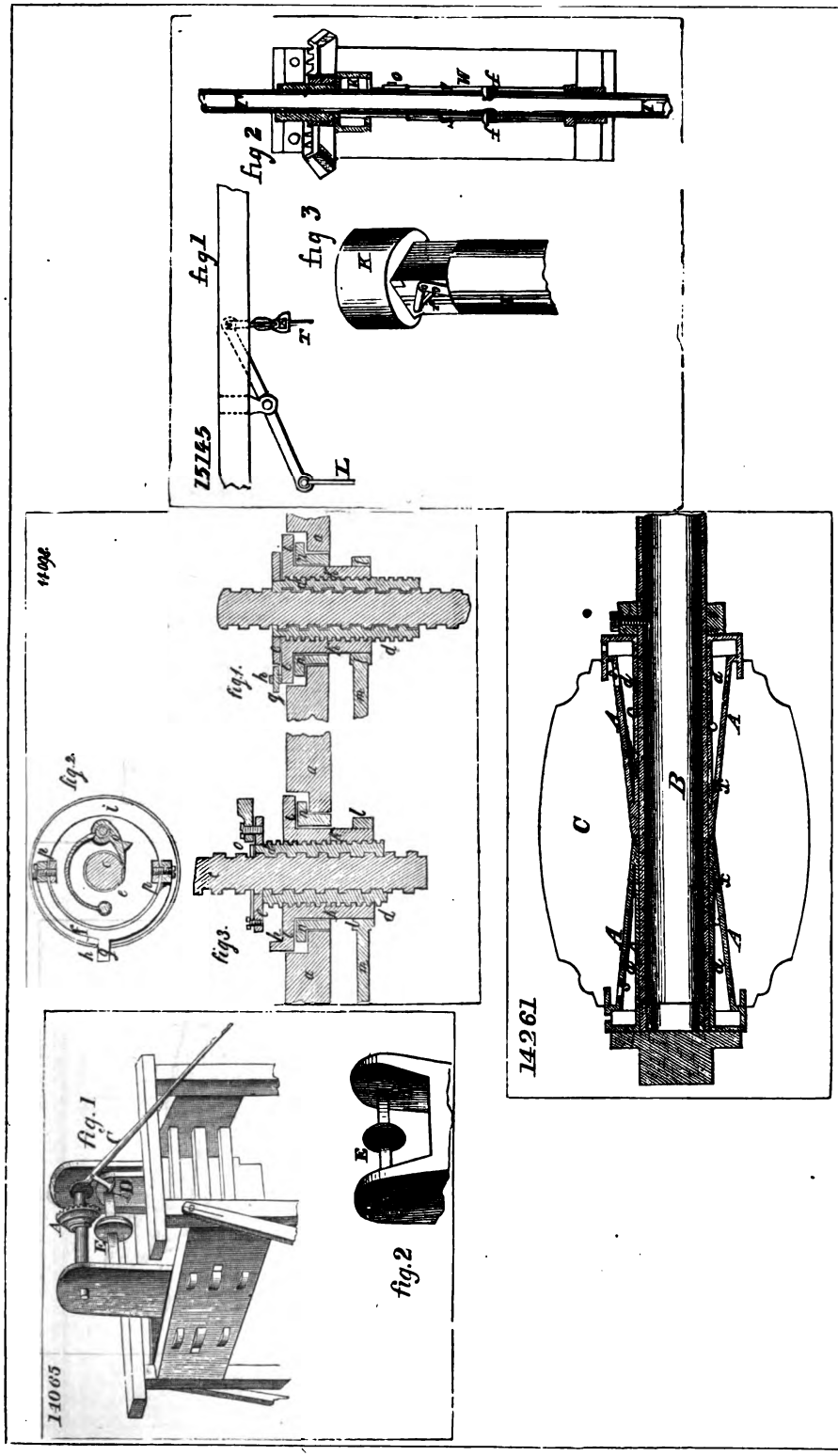

Digitized by Google

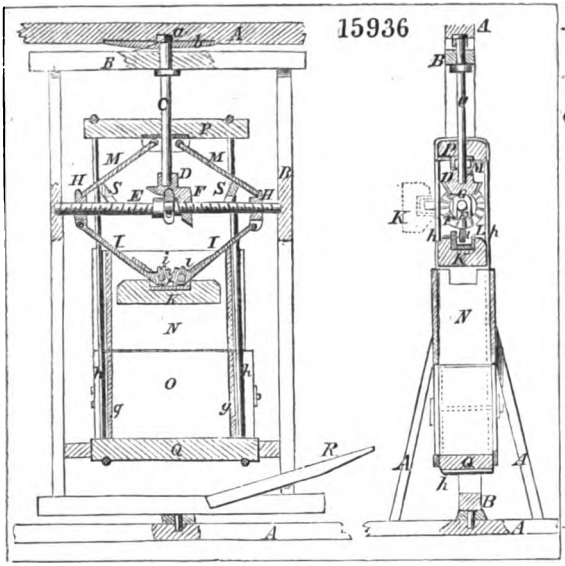

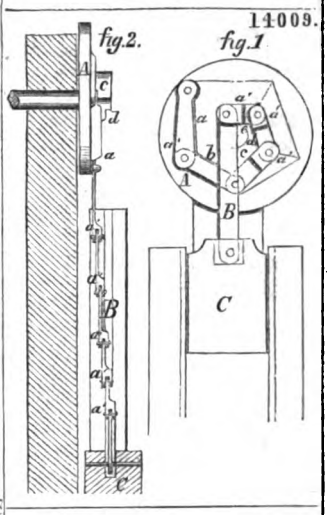

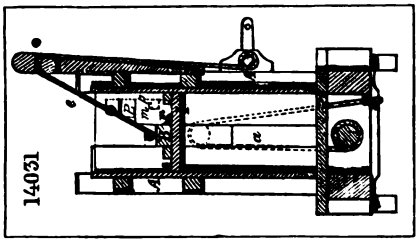

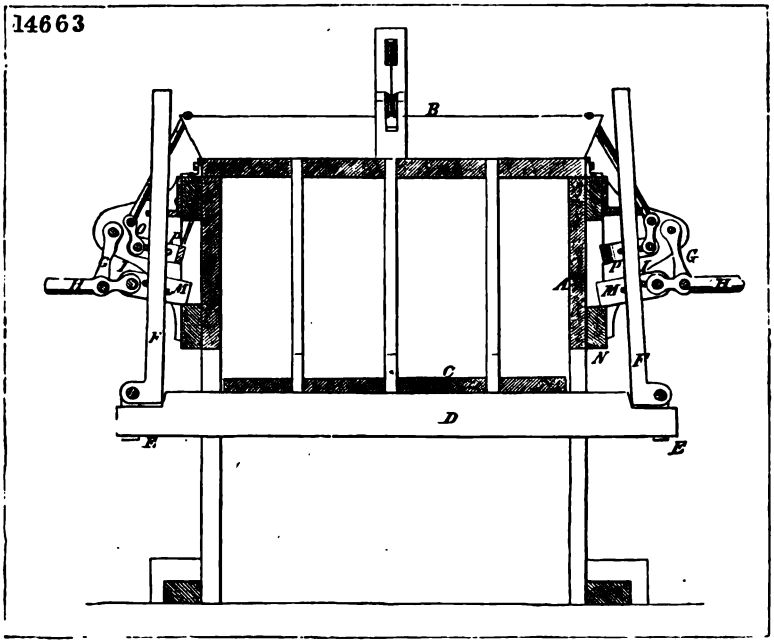

Digitized by Google

14361

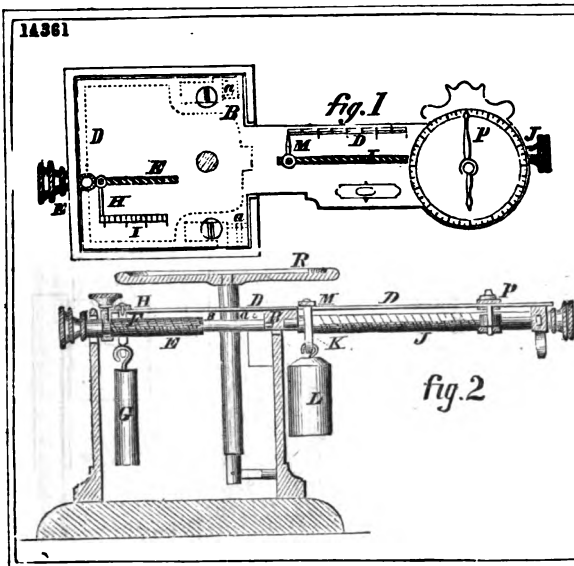

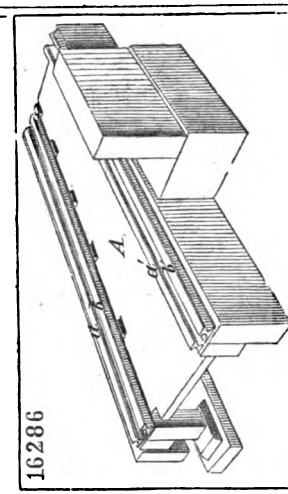

16286

14198

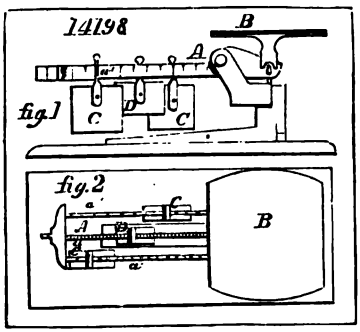

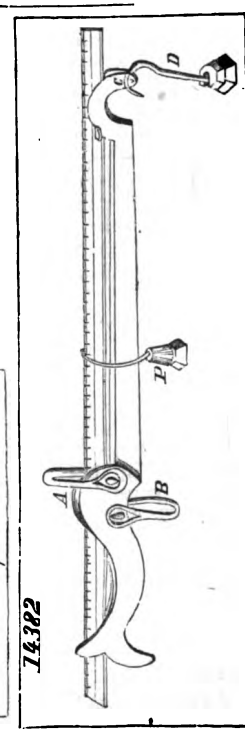

14382

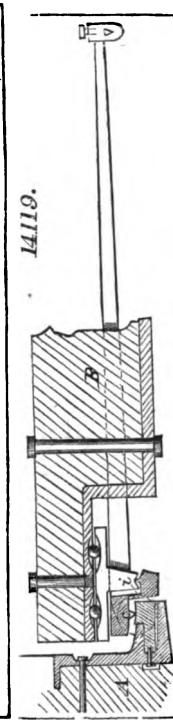

14119.

14159

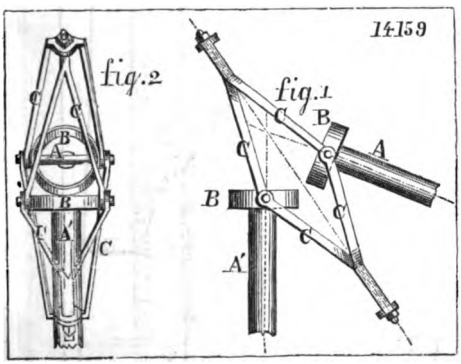

14210

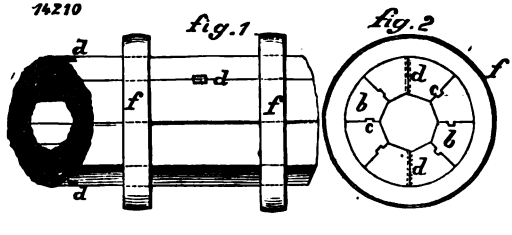

Digitized by Google

14733

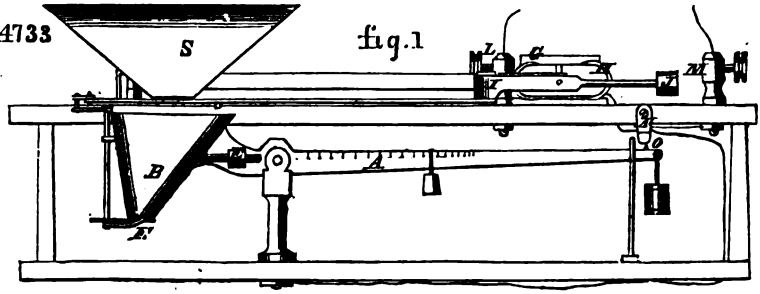

fig.2

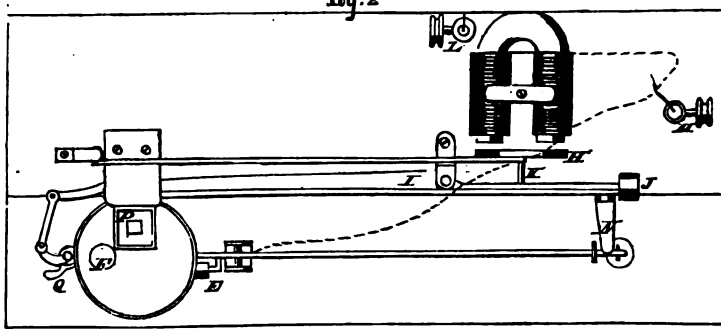

14493

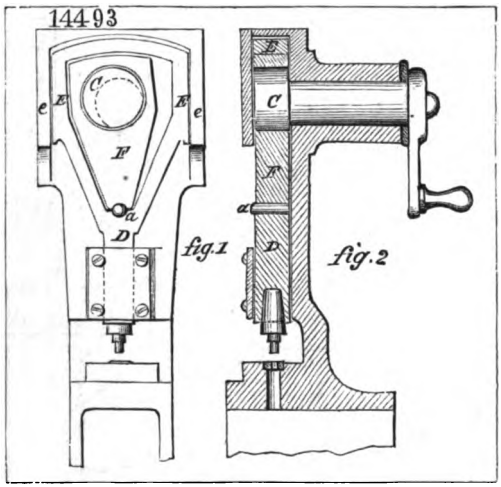

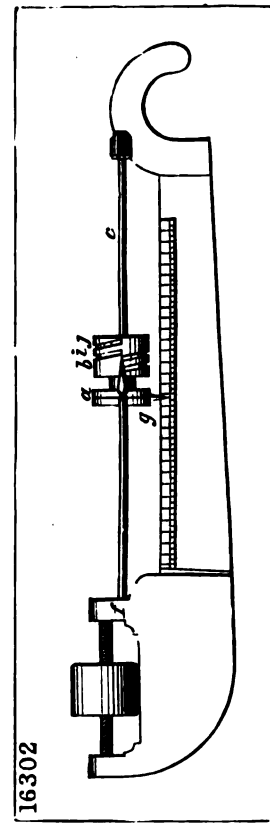

14702

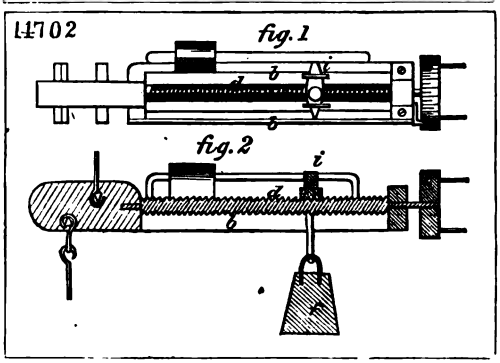

Digitized by Google

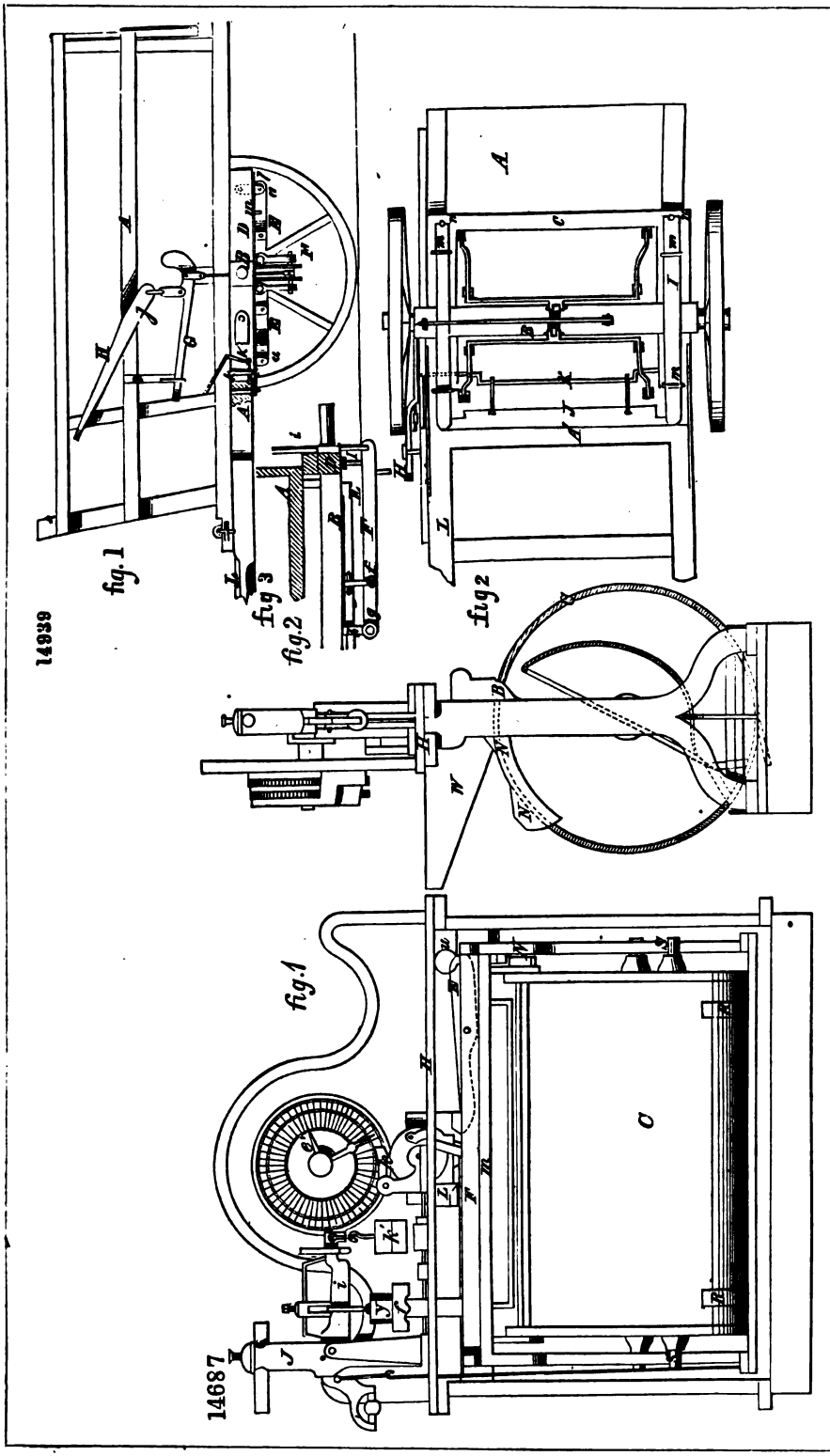

Digitized by Google

14190.

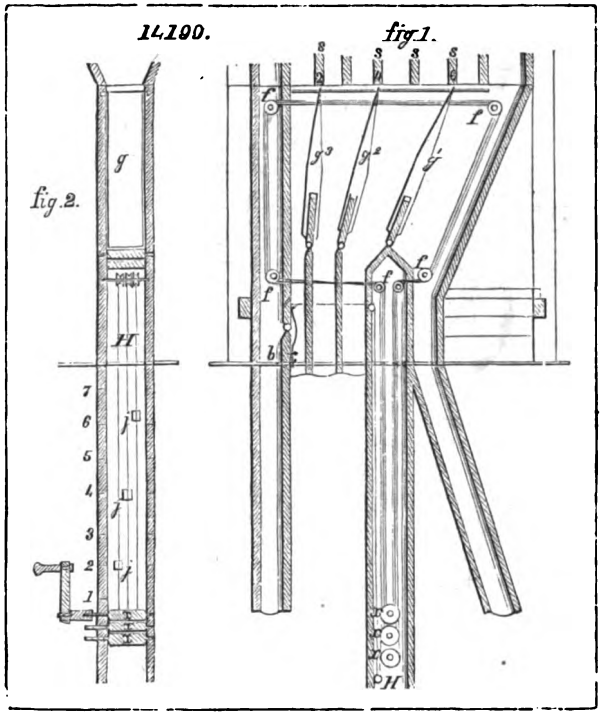

15455

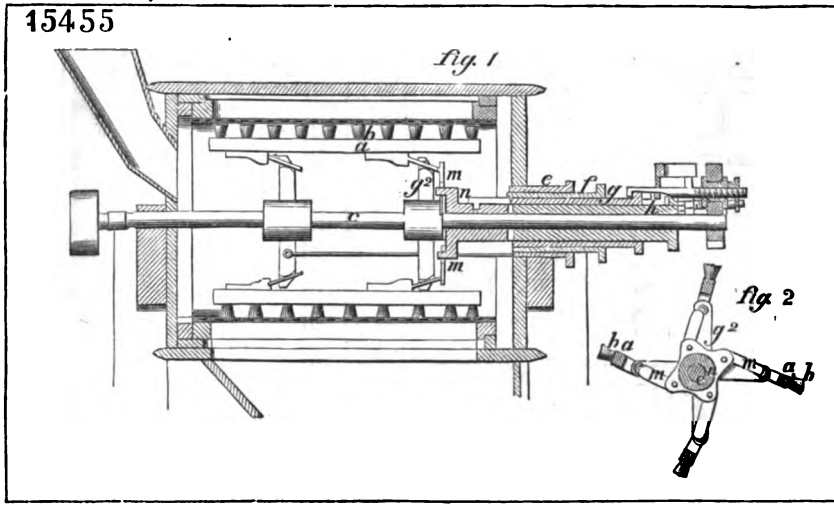

Digitized by Google

15697

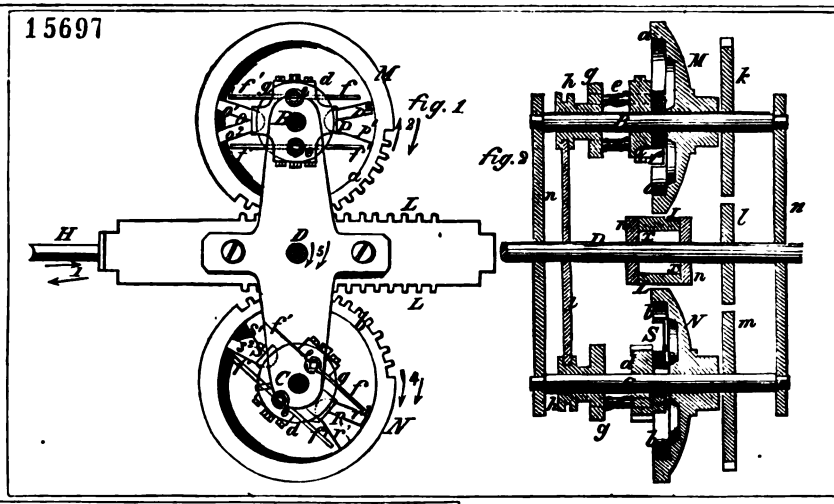

16088

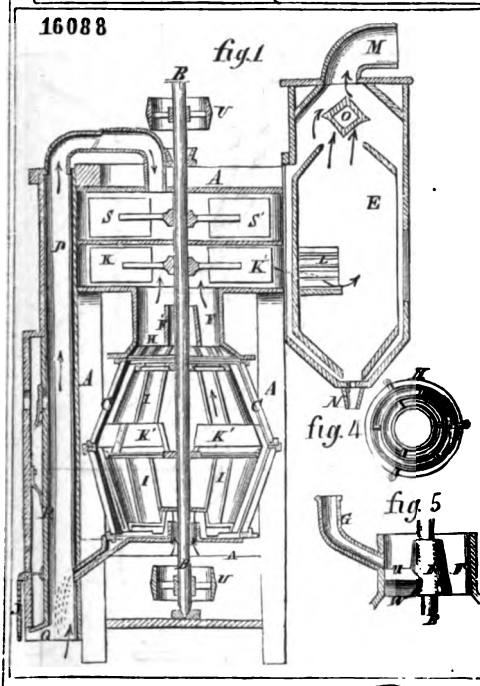

15630

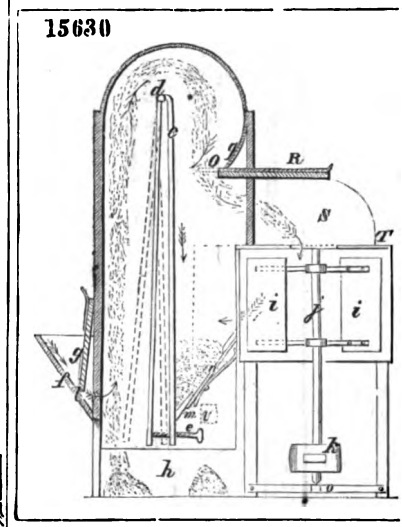

15879

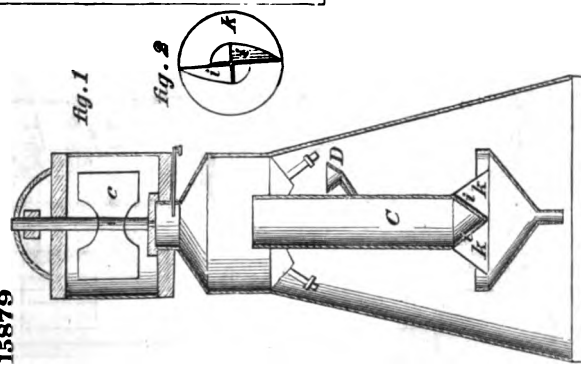

Digitized by Google

16103

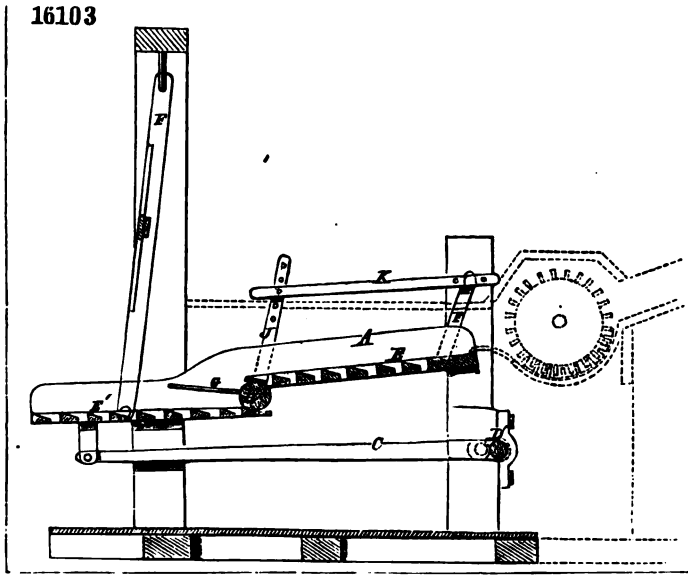

15785

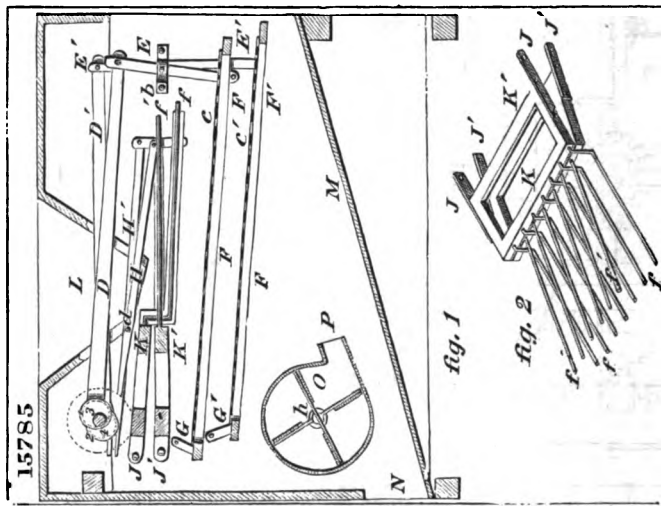

14547

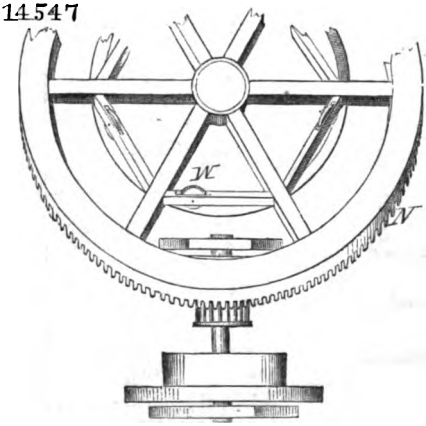

15180

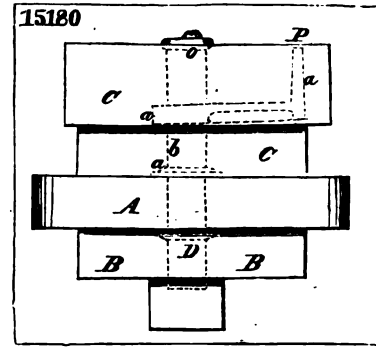

Digitized by Google

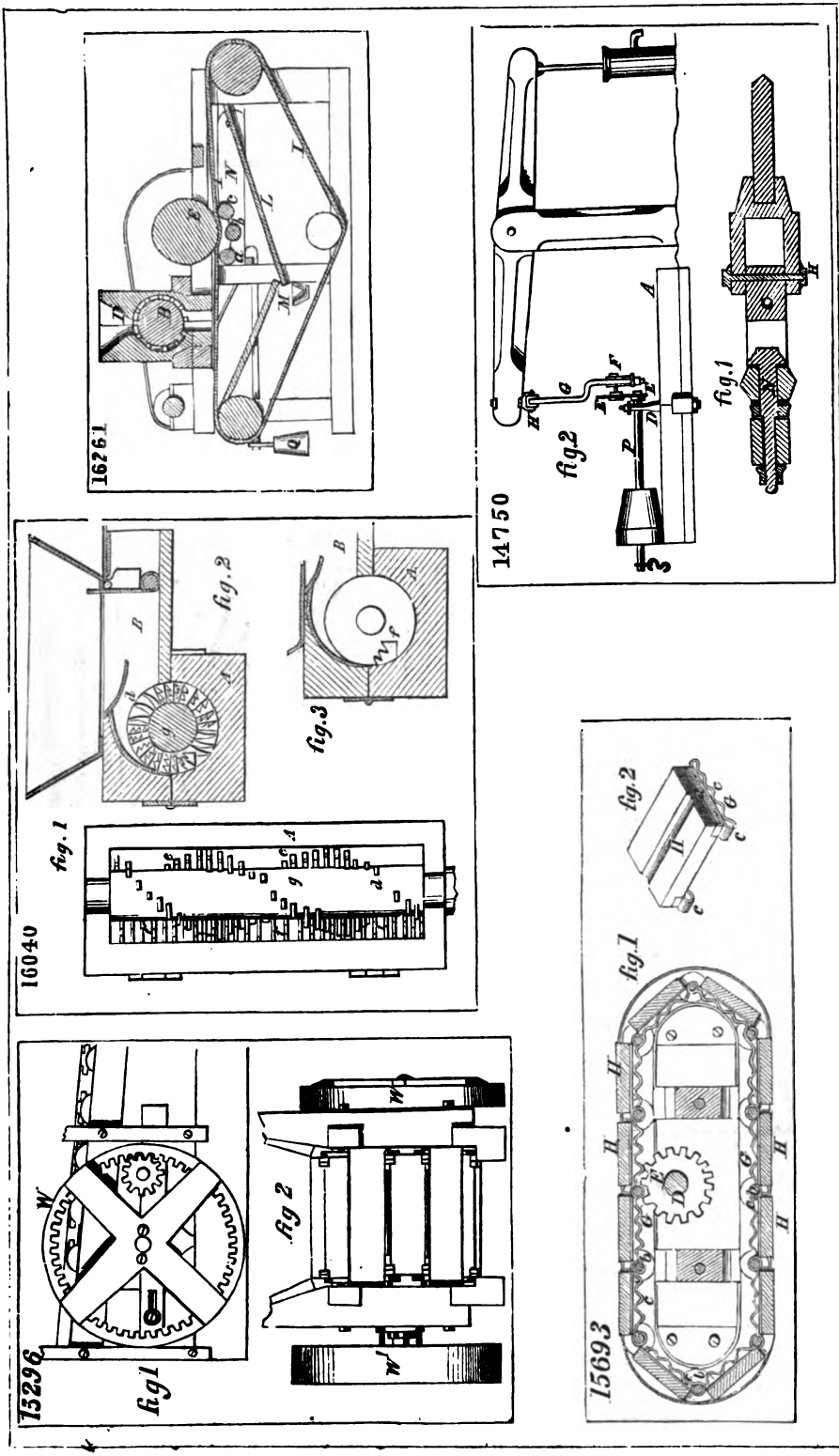

Digitized by Google

15255

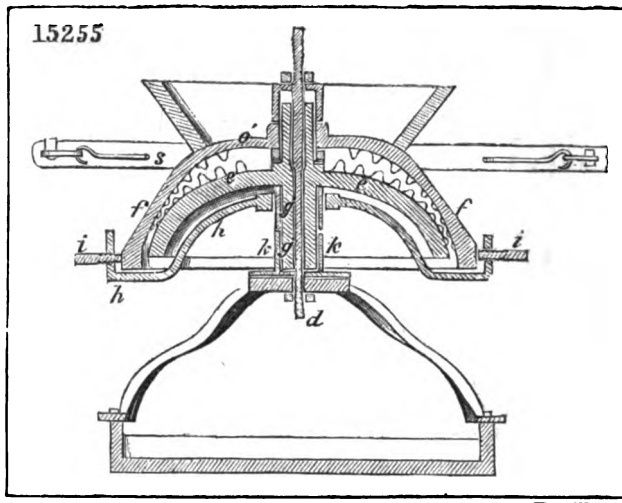

15060

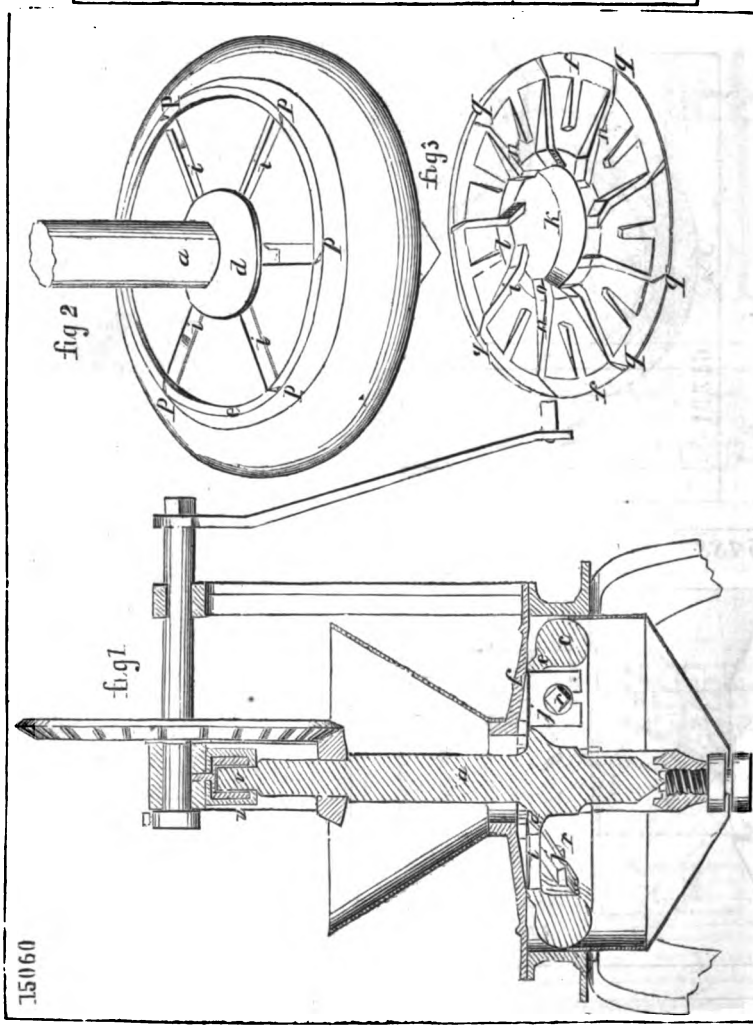

Digitized by Google

14227

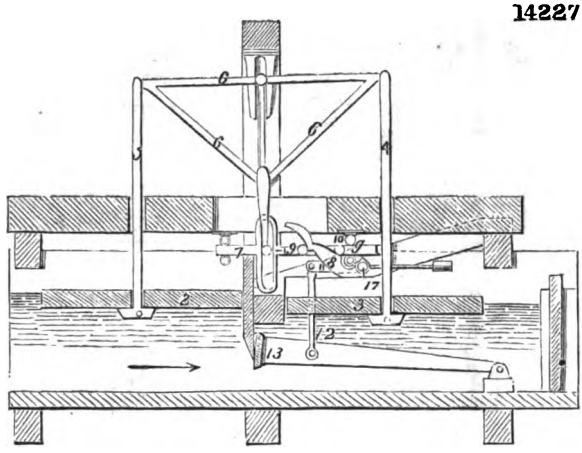

16249

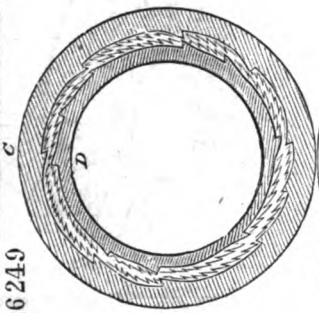

fig.1

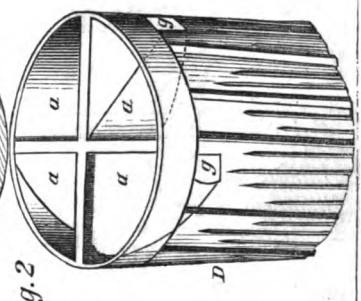

fig.2

15488

fig.1

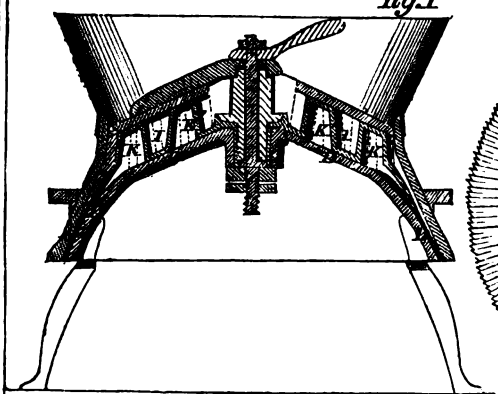

fig 2

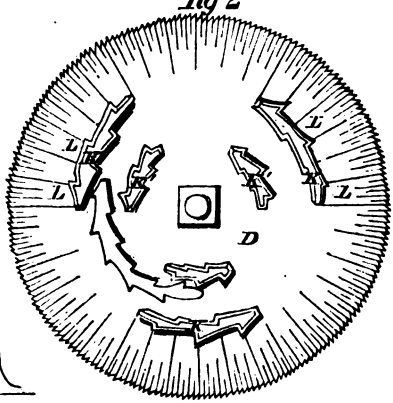

Digitized by Google

15841

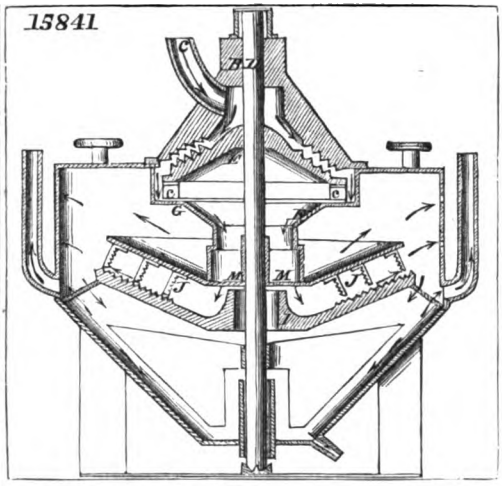

14164

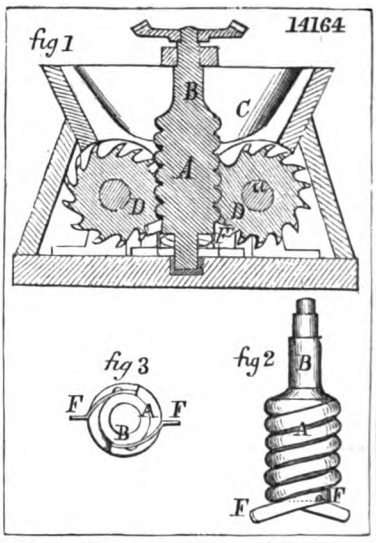

15680

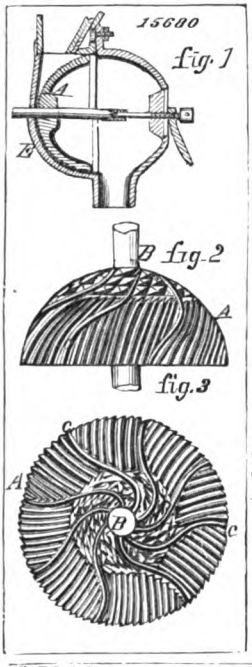

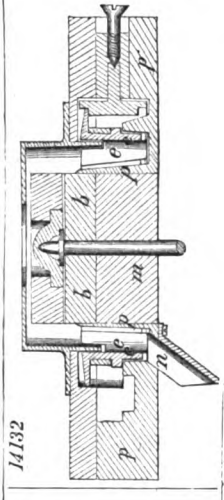

16074

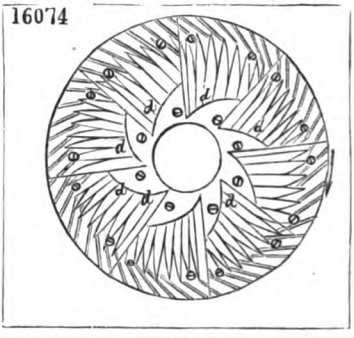

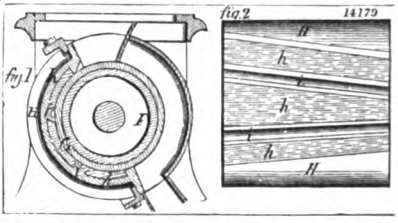

15868

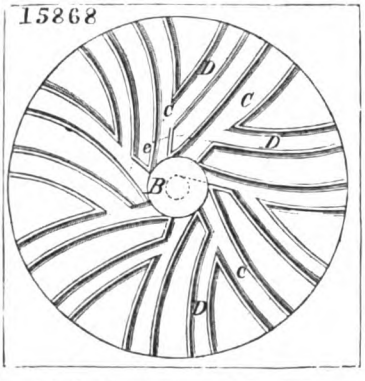

15346

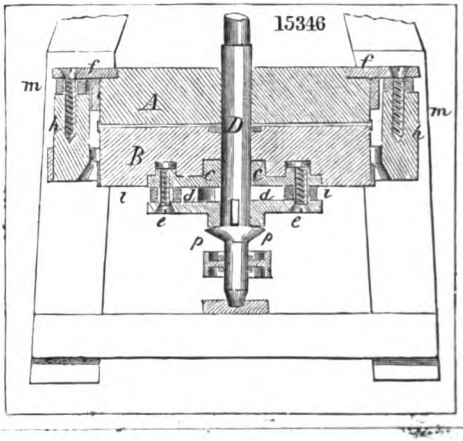

Digitized by Google

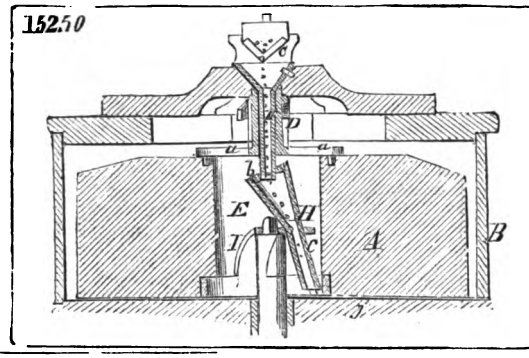

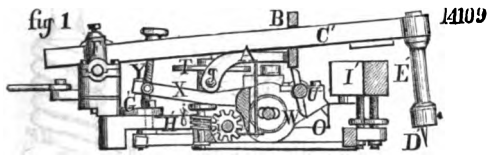

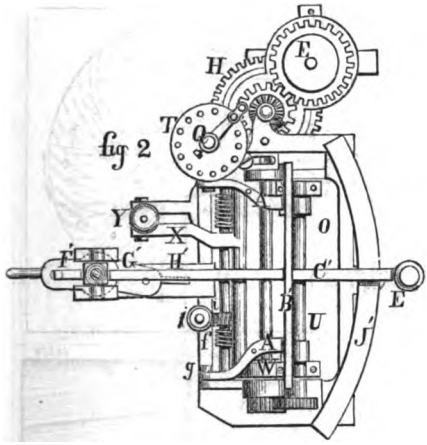

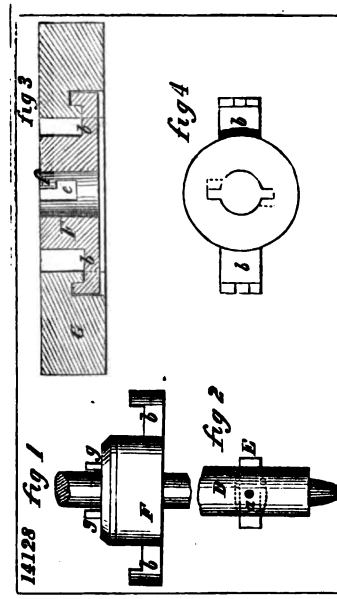

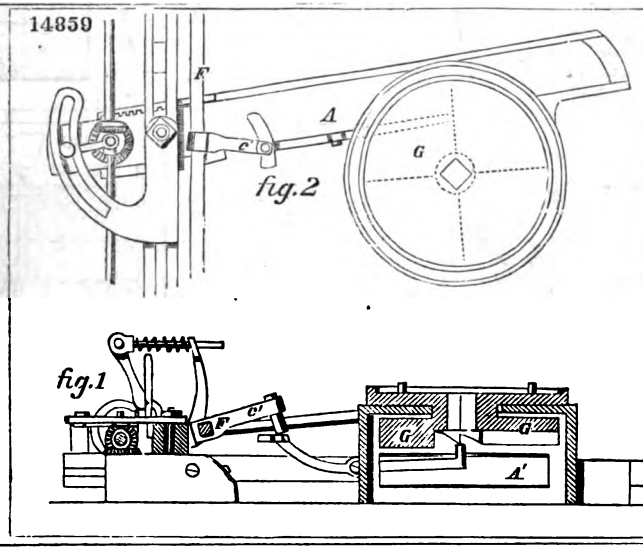

Digitized by Google

16303

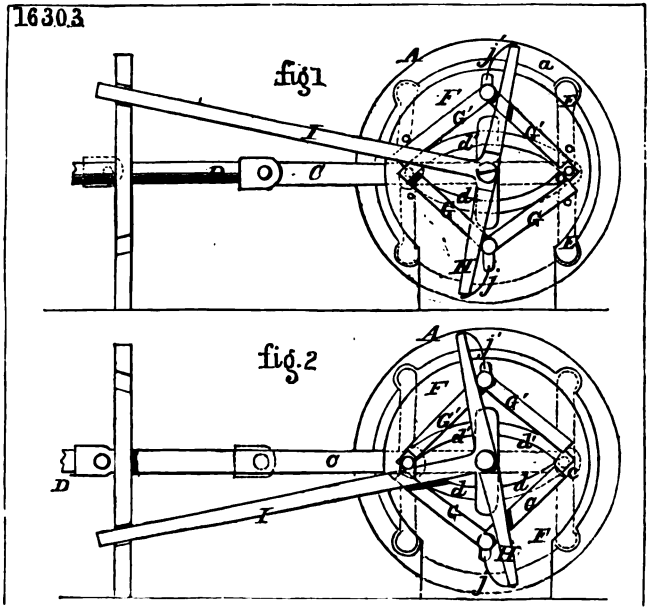

14473

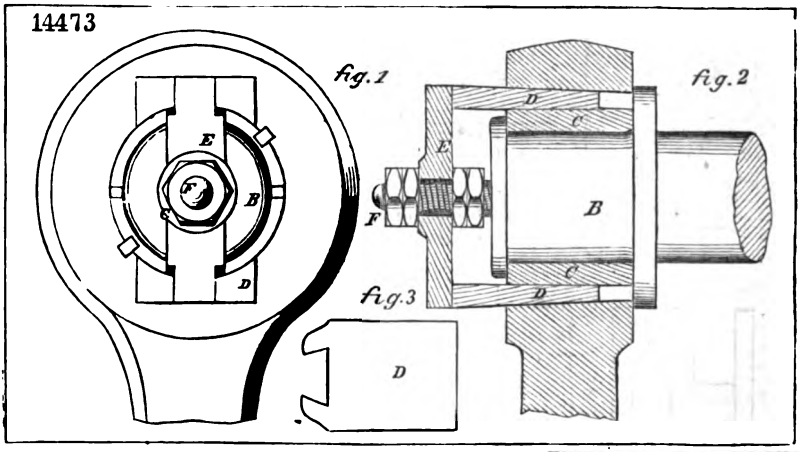

15978

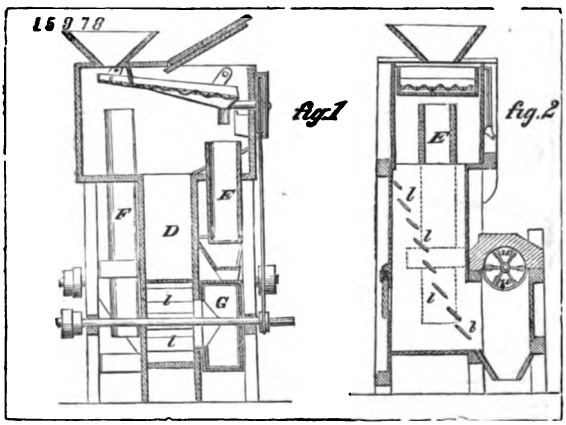

15442

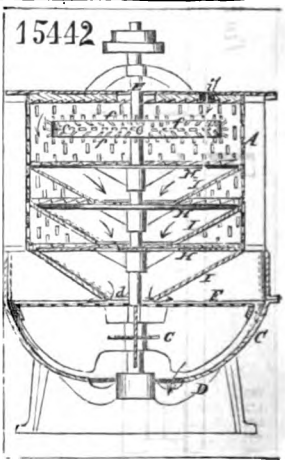

Digitized by Google

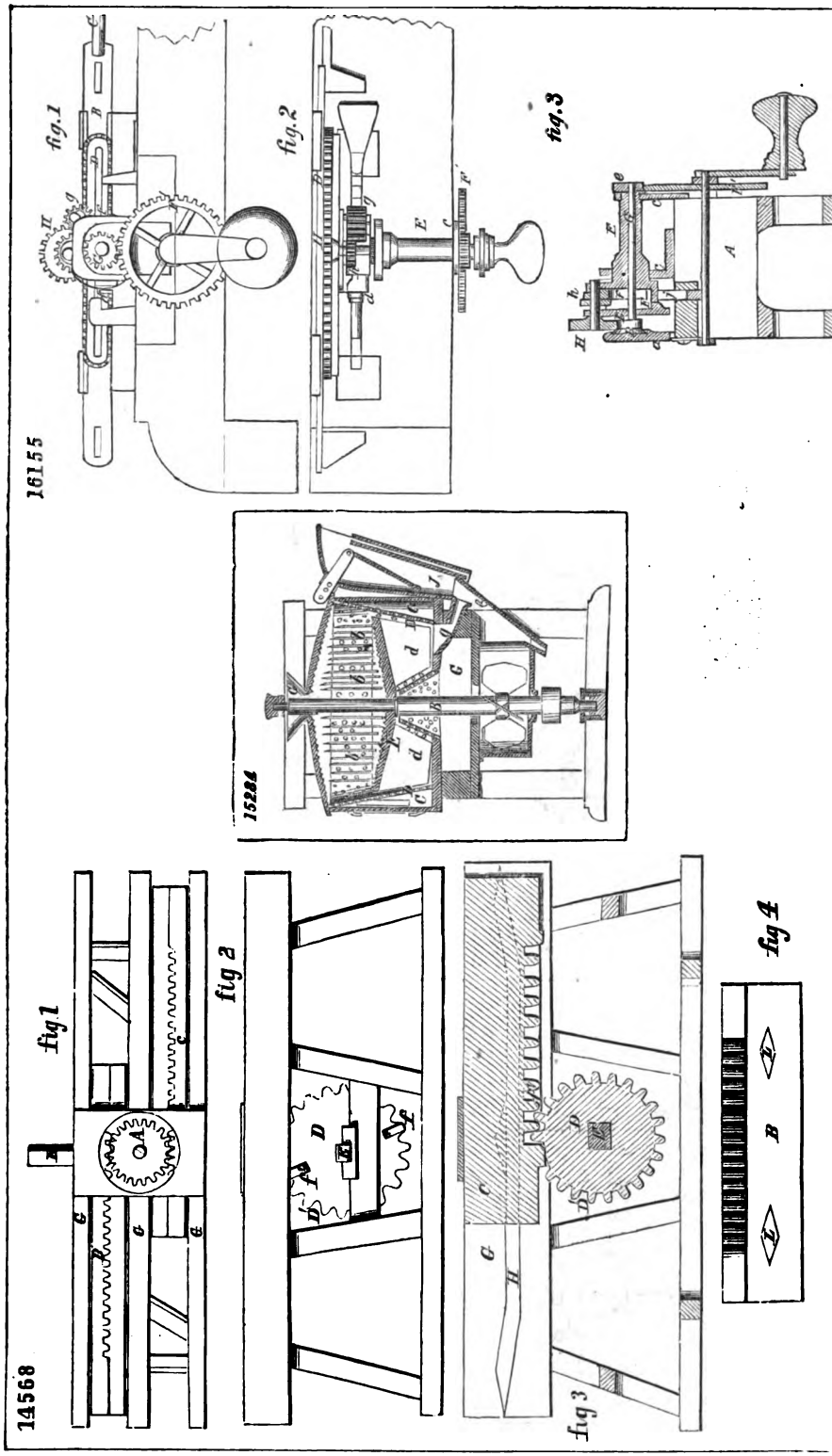

Digitized by Google

14190.

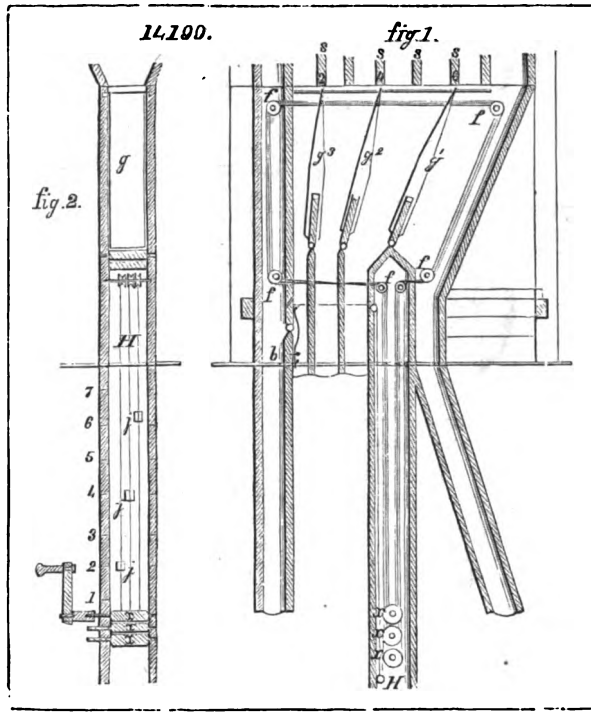

15455

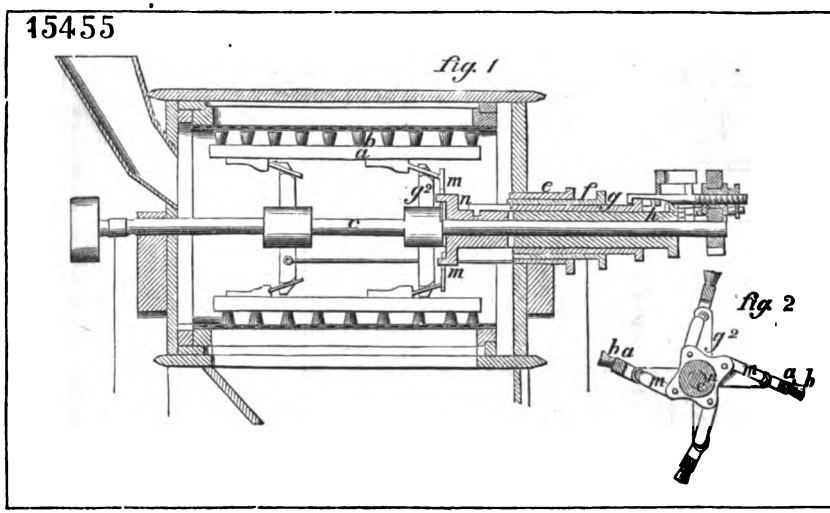

Digitized by Google

15697

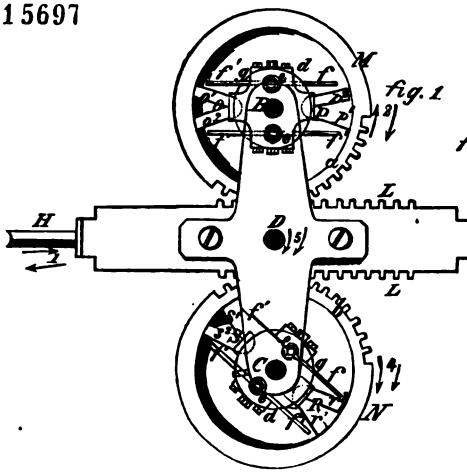

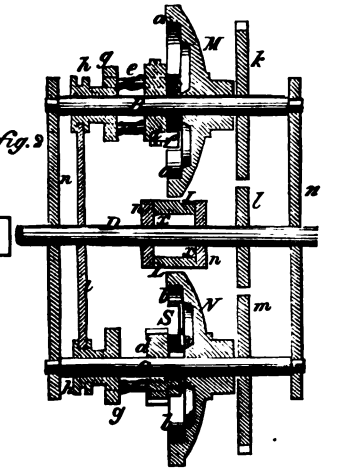

16088

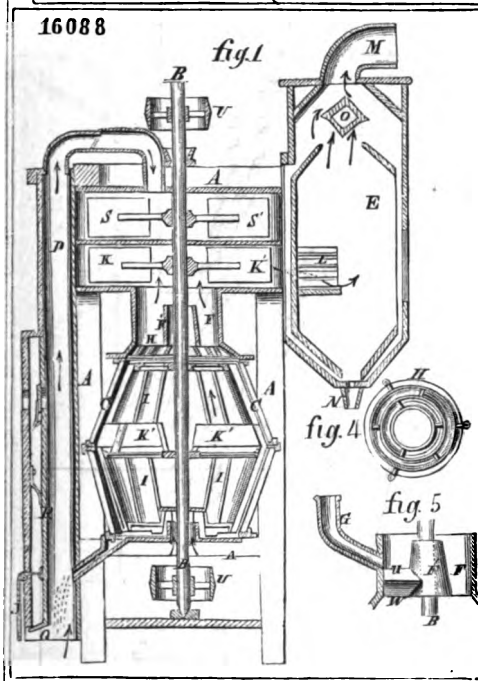

15630

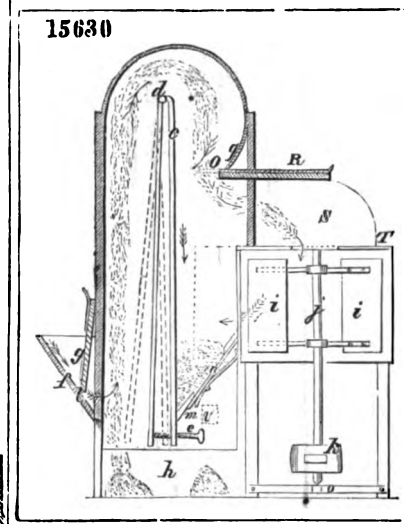

15879

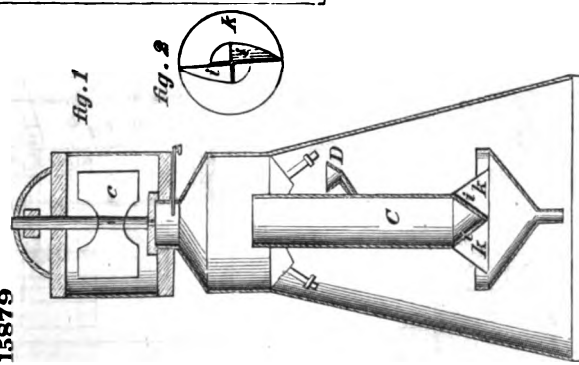

Digitized by Google

16103

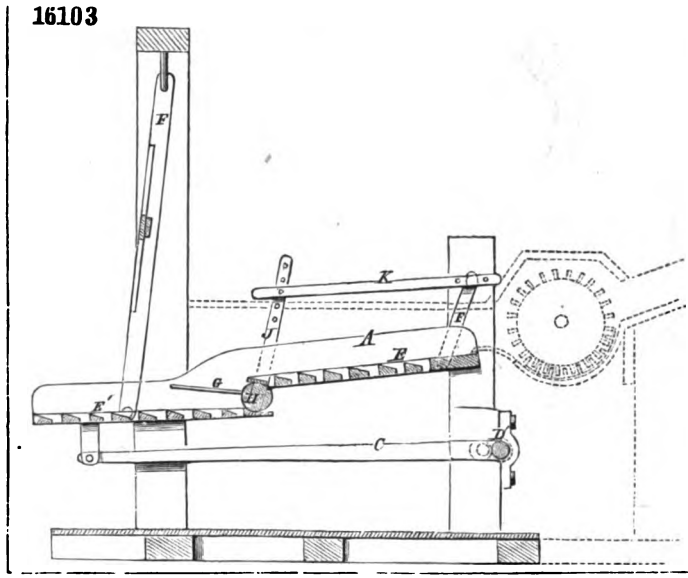

15785

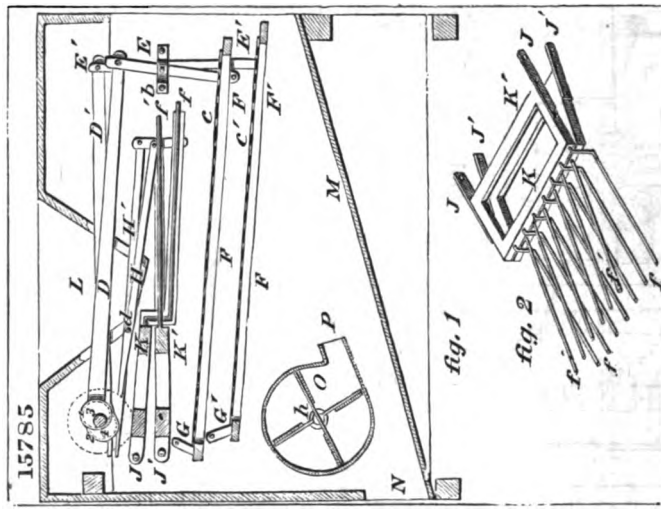

14547

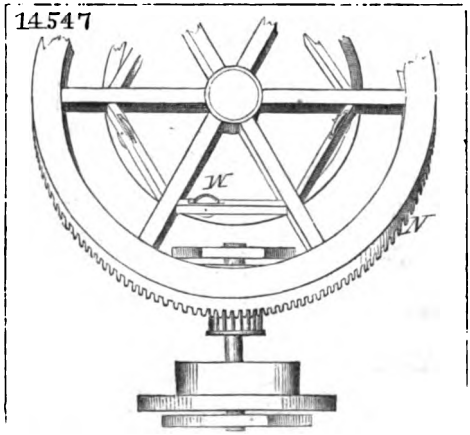

15180

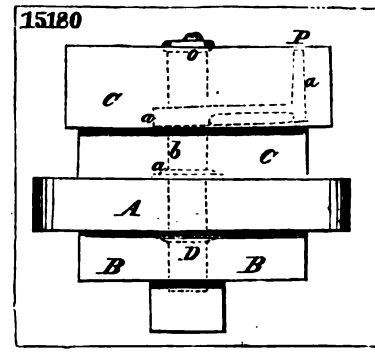

Digitized by Google

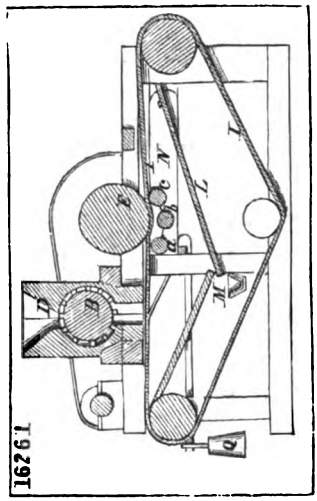

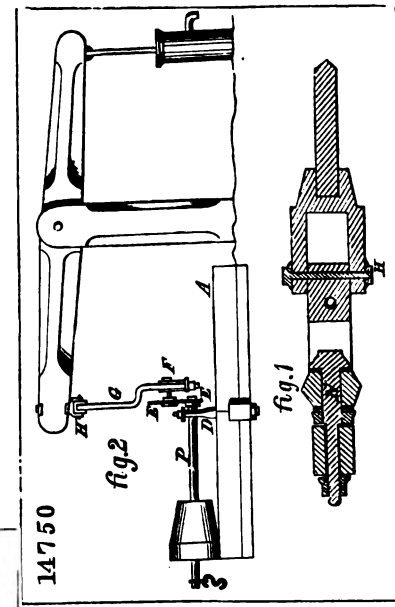

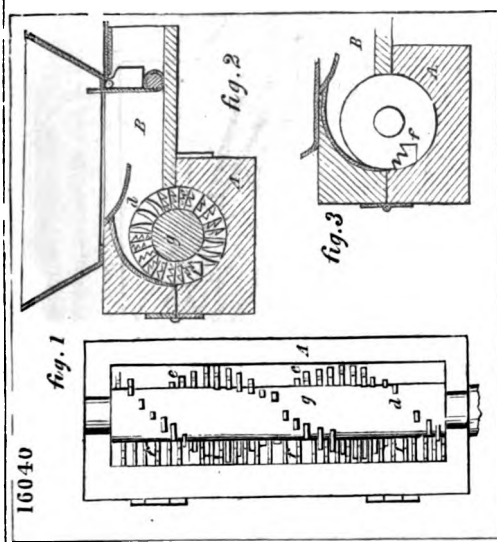

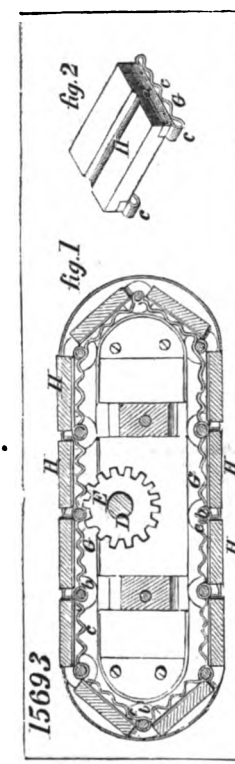

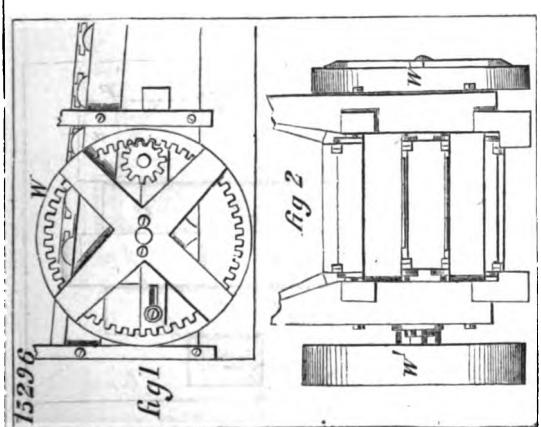

Digitized by Google

15255

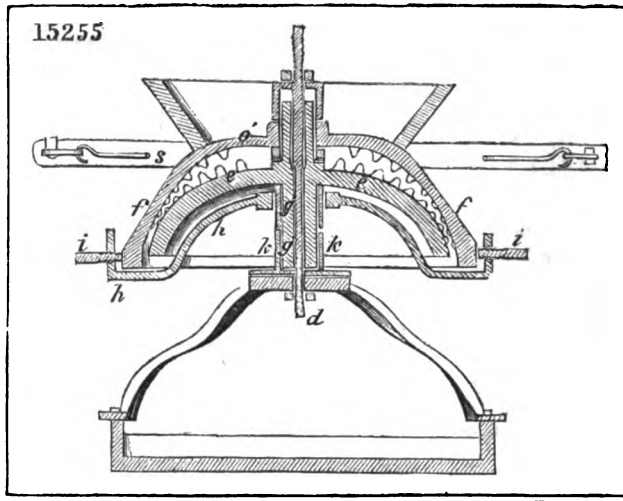

15160

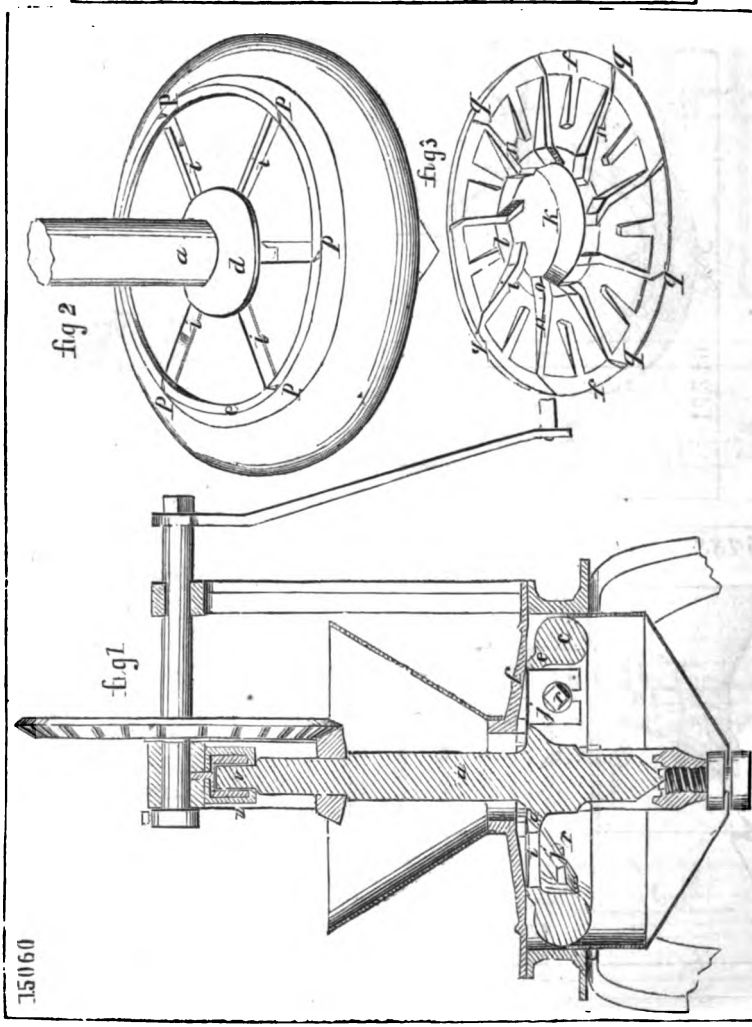

14227

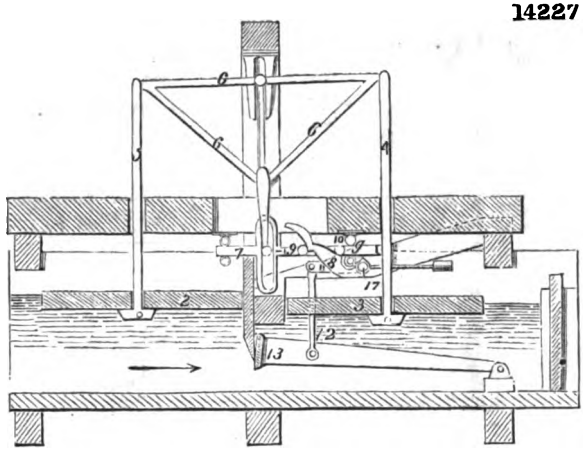

16249

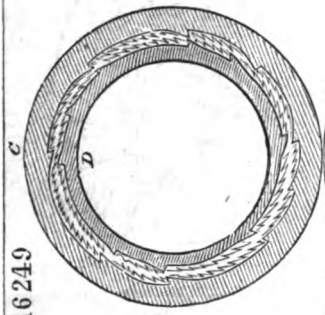

fig.1

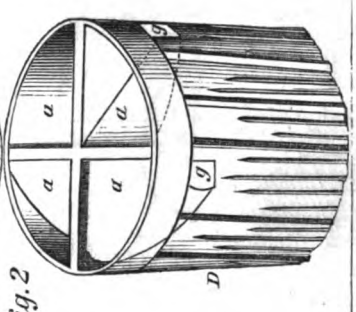

fig.2

15488

fig.1

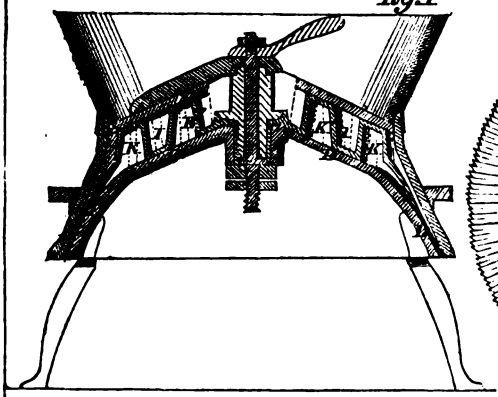

fig 2

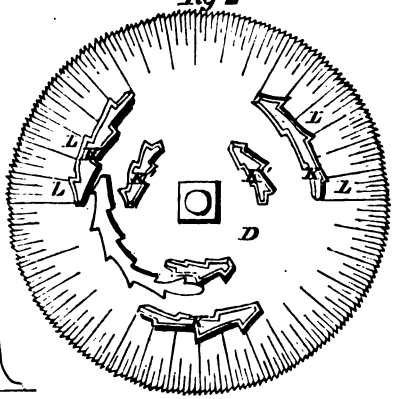

Digitized by Google

15841

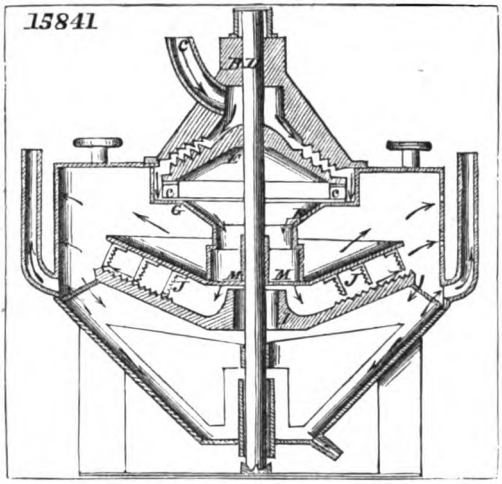

14164

fig 1

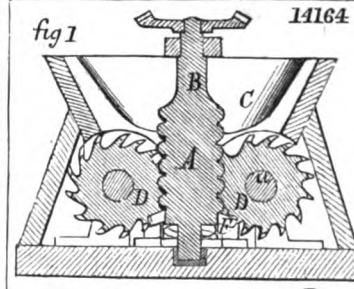

fig 3

fig 2

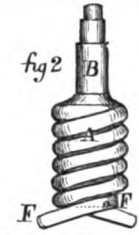

15680

fig. 1

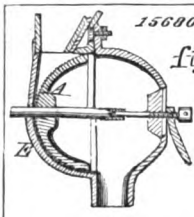

B fig. 2

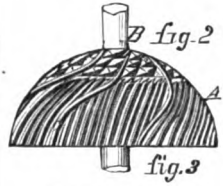

fig. 3

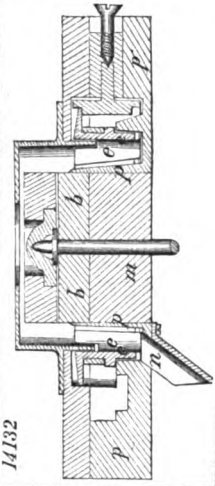

14132

16074

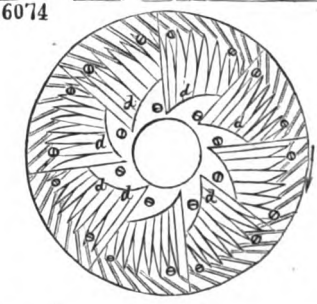

fig 1

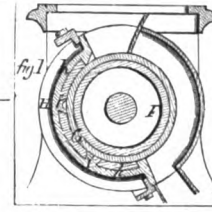

fig 2 14179

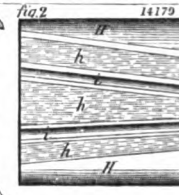

15868

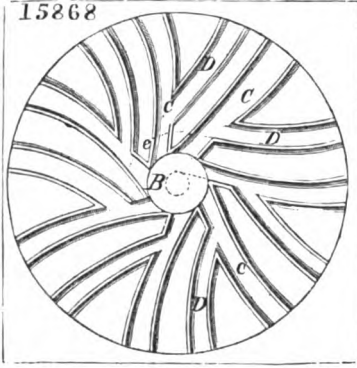

15346

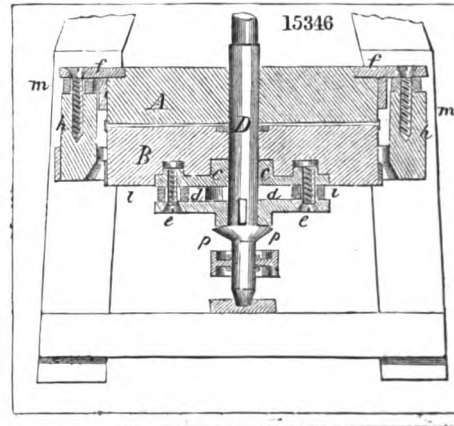

Digitized by Google

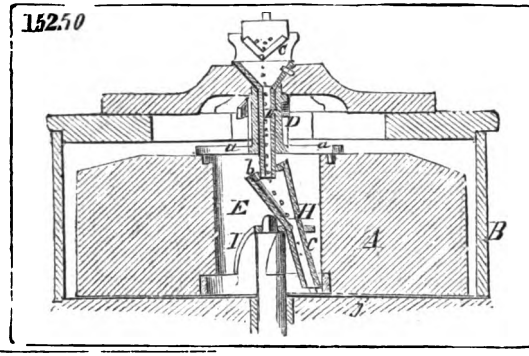

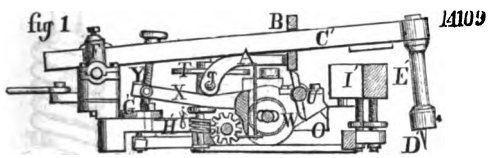

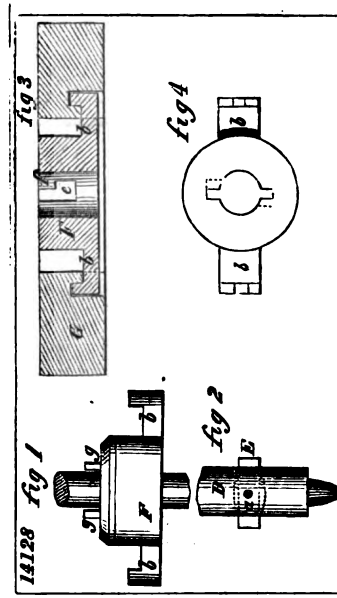

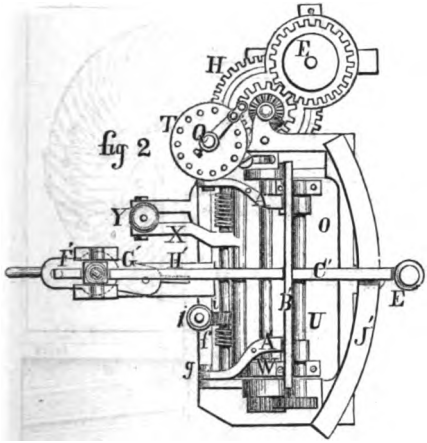

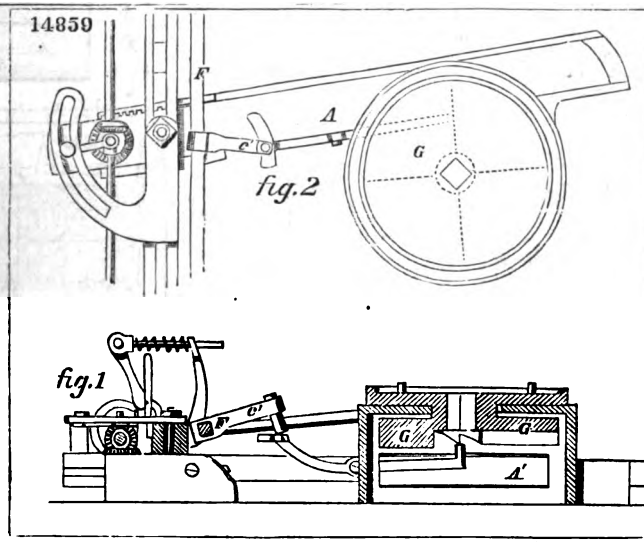

Digitized by Google

15841

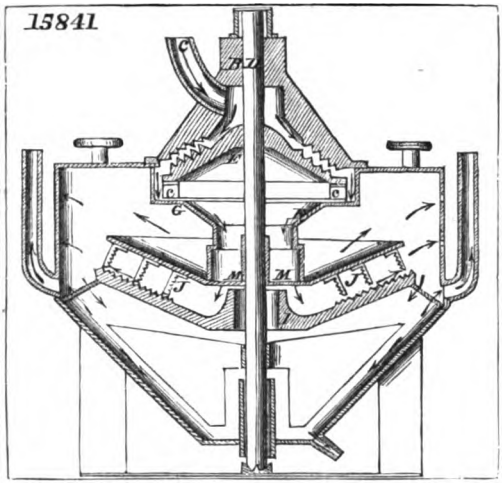

14164

fig 1

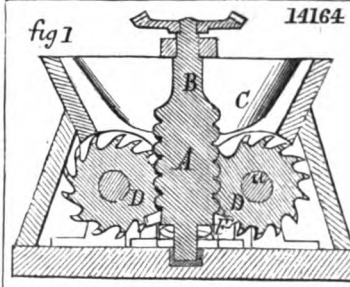

fig 3

fig 2

15680

fig. 1

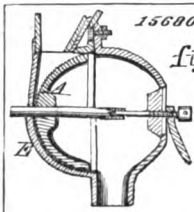

fig. 2

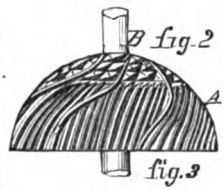

fig. 3

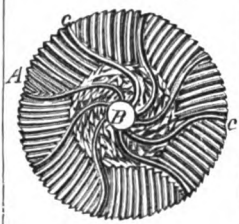

14132

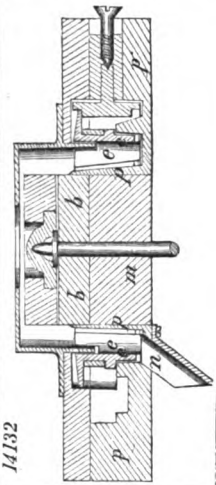

16074

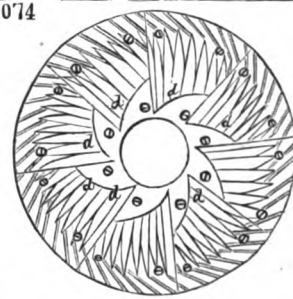

fig 1

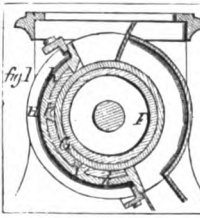

fig 2 14179

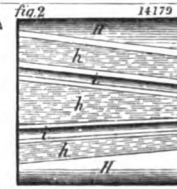

15868

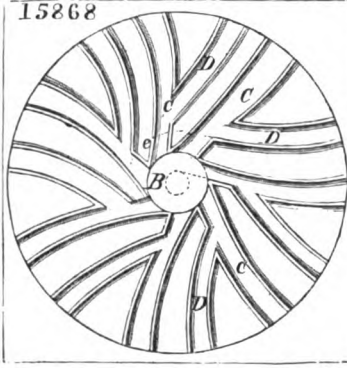

15346

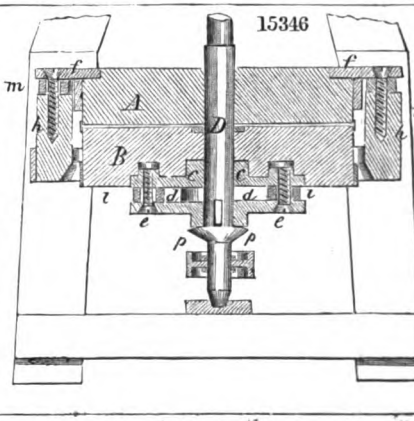

Digitized by Google

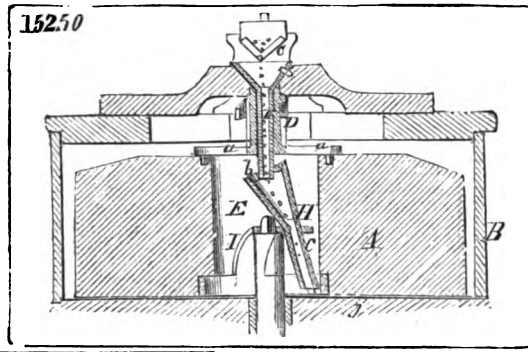

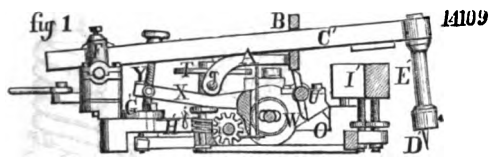

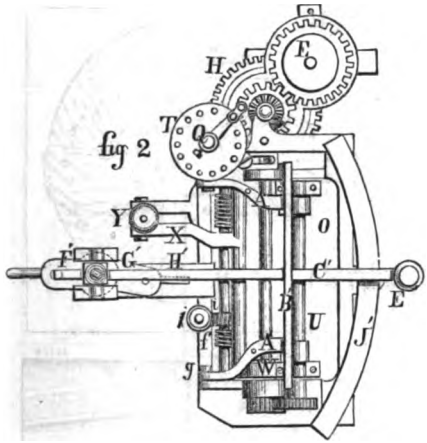

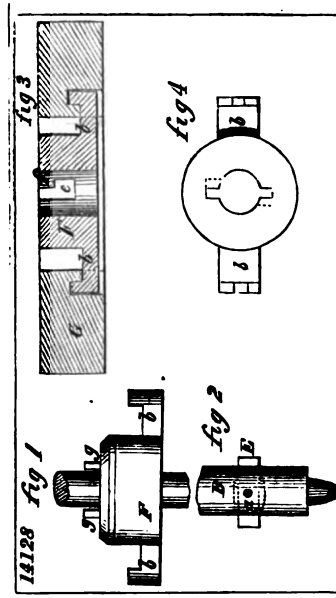

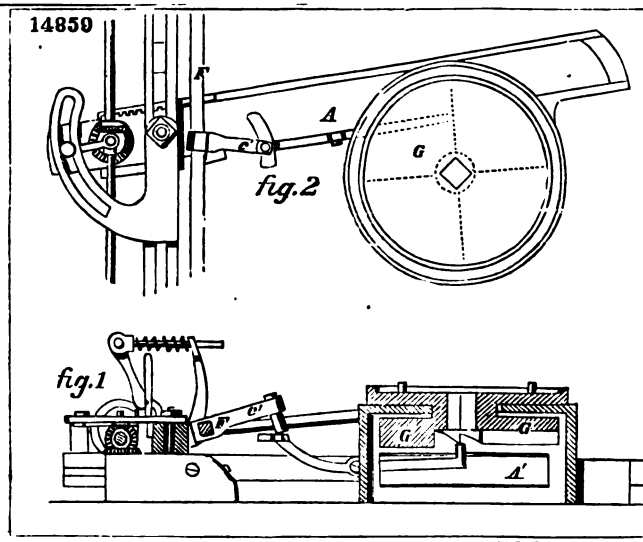

Digitized by Google

16303

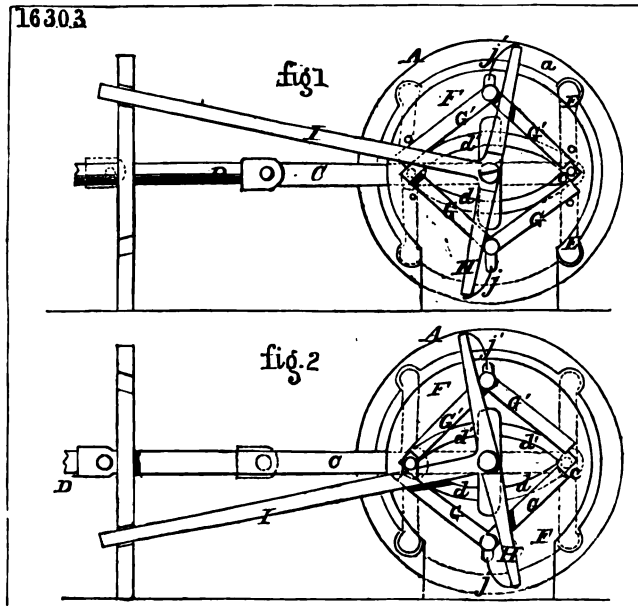

14473

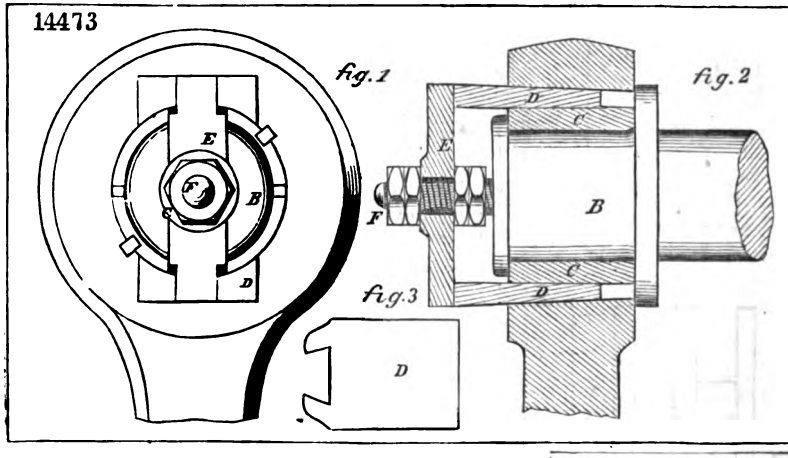

16070

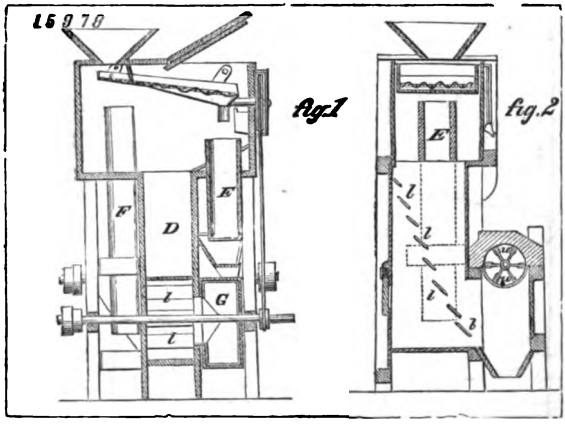

15442

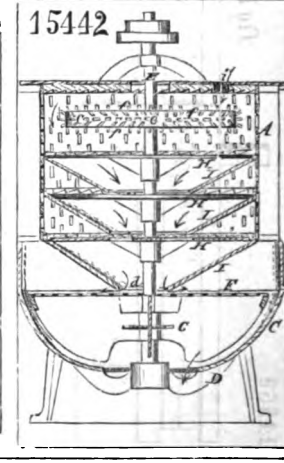

Digitized by Google

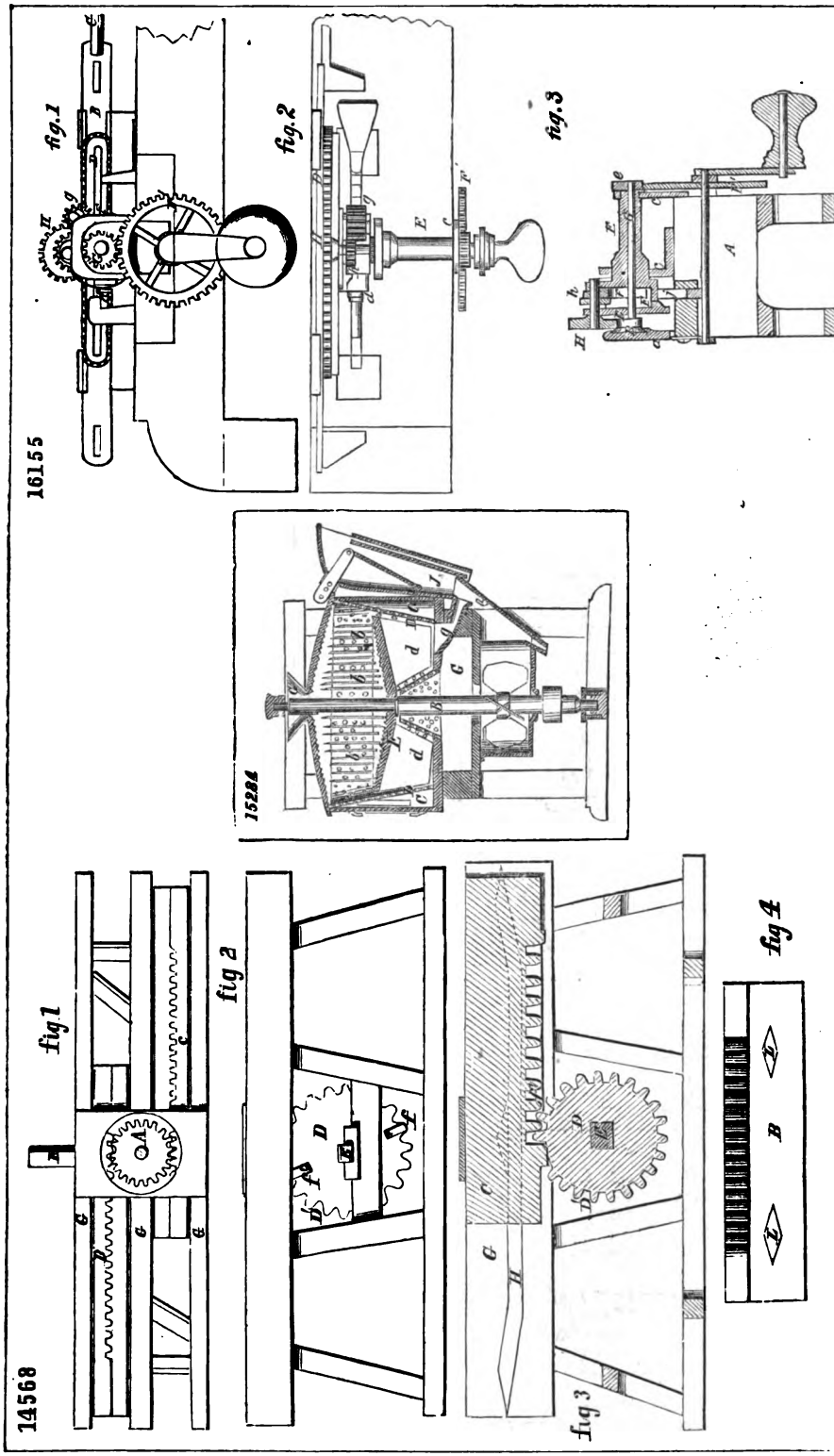

Digitized by Google

14829
fig.1

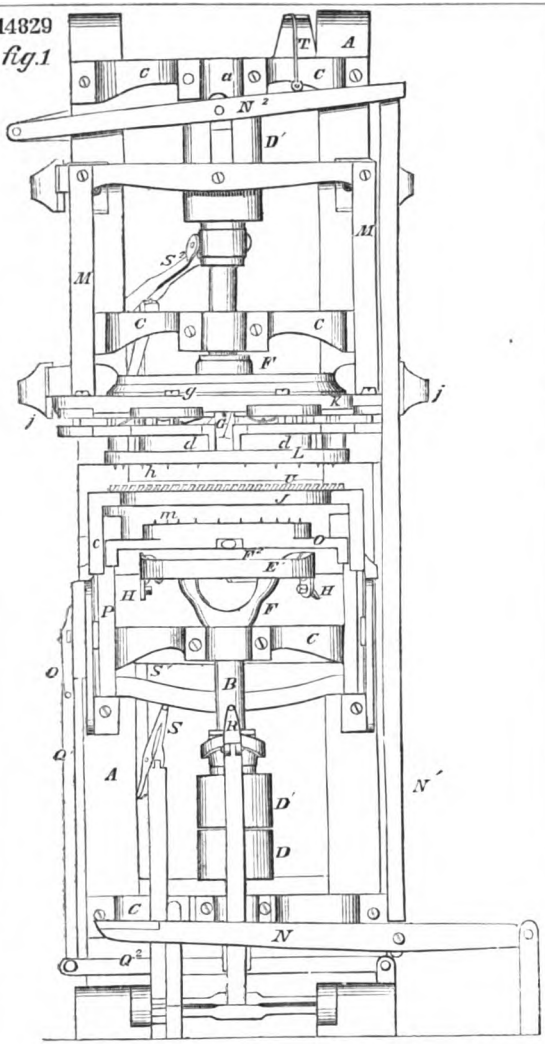

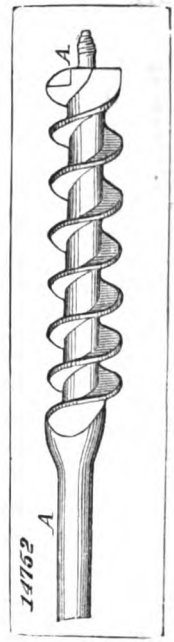

fig.2

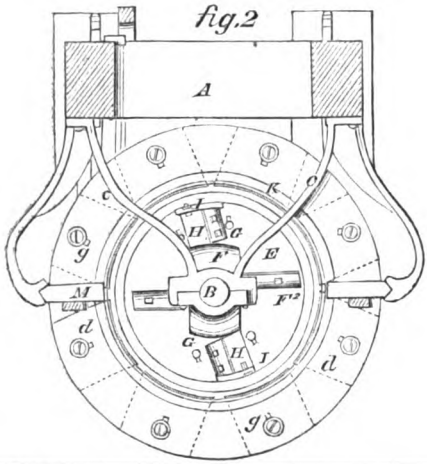

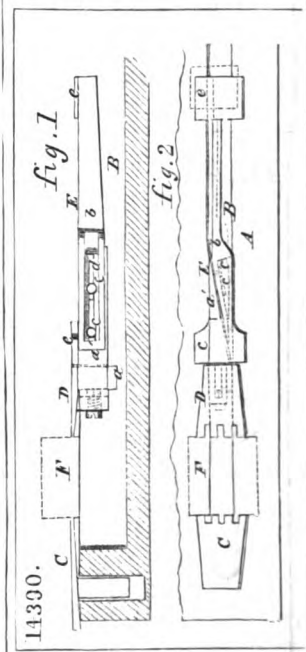

Digitized by Google

14511

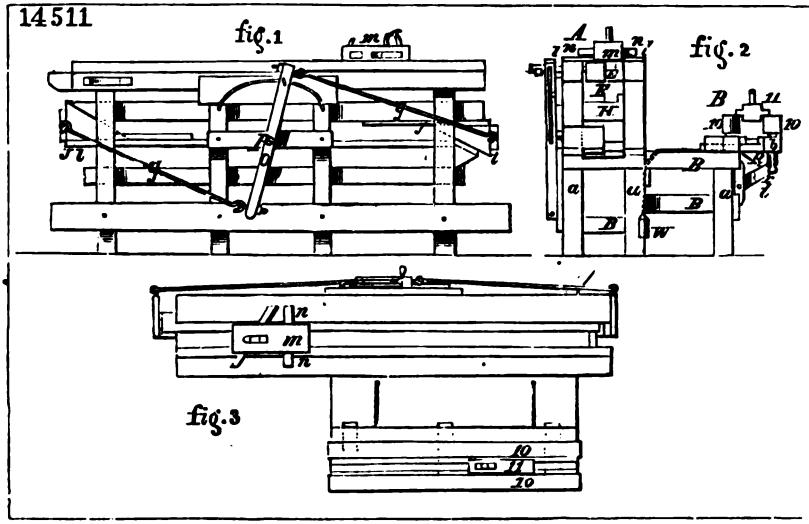

15739

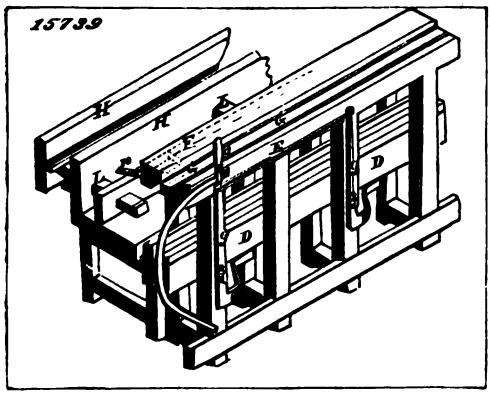

15763

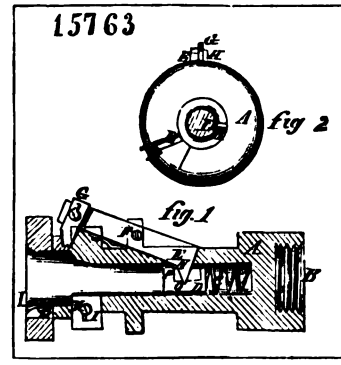

14569

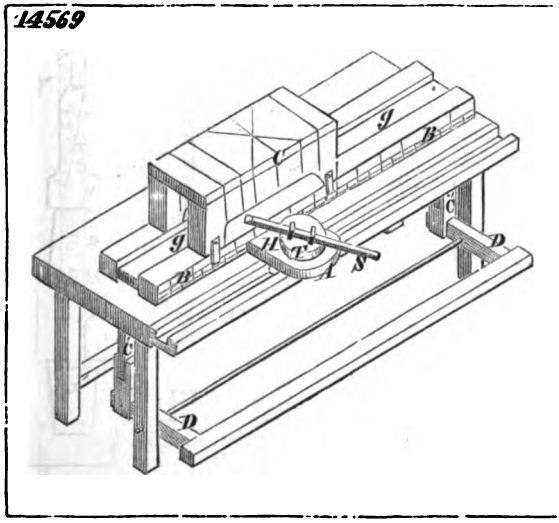

14105

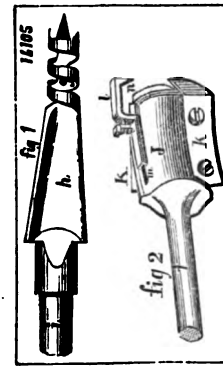

Digitized by Google

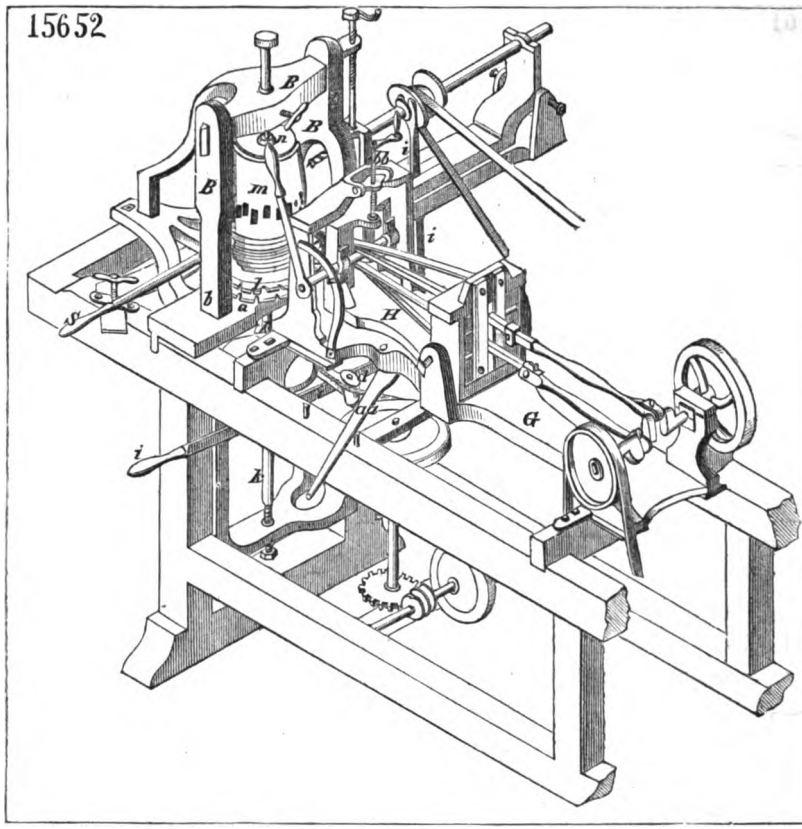

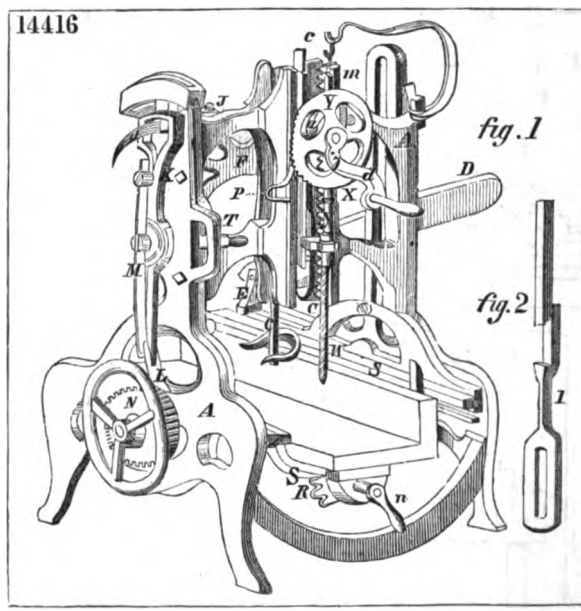

Digitized by Google

16101

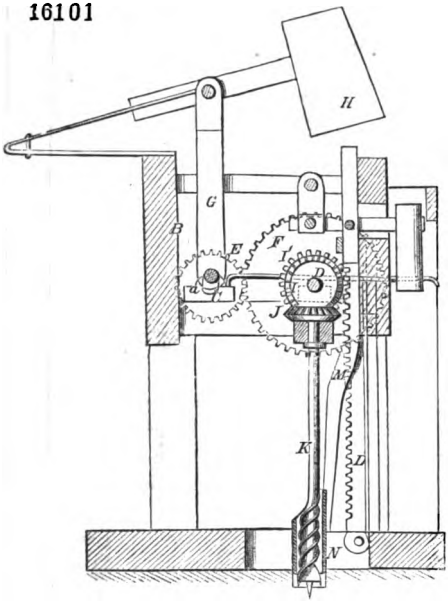

14223

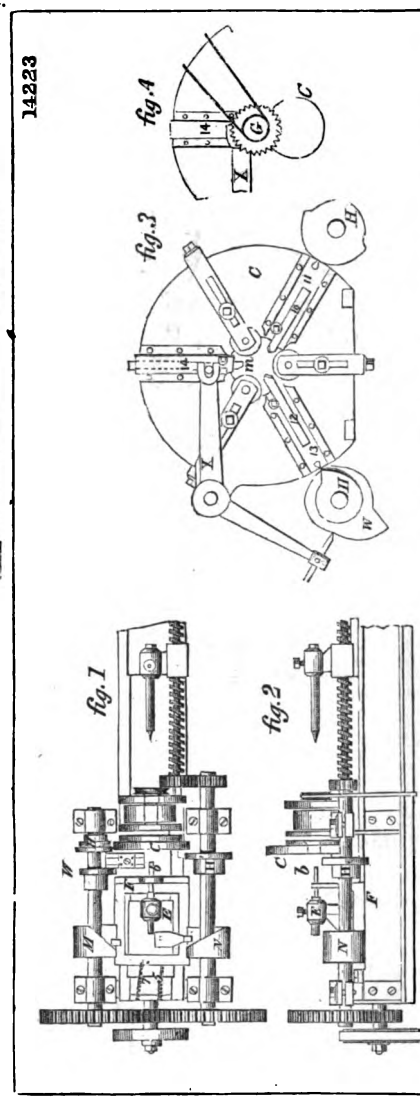

14327

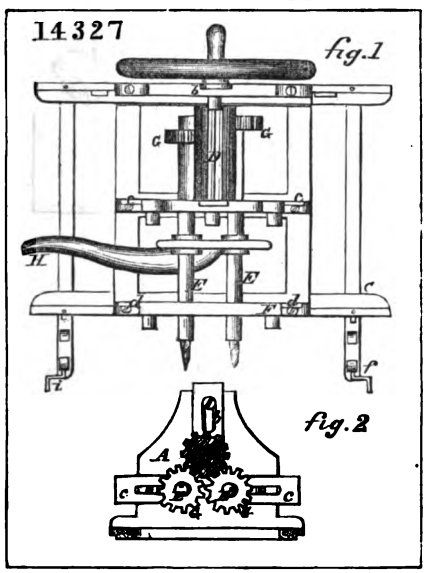

15678

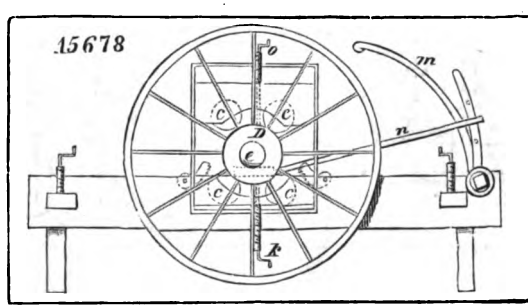

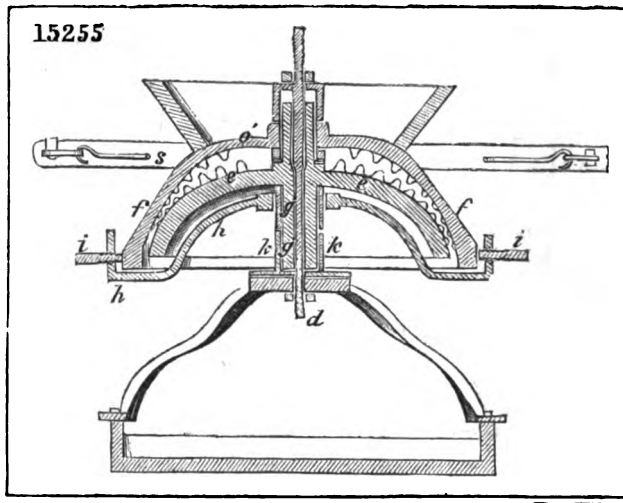

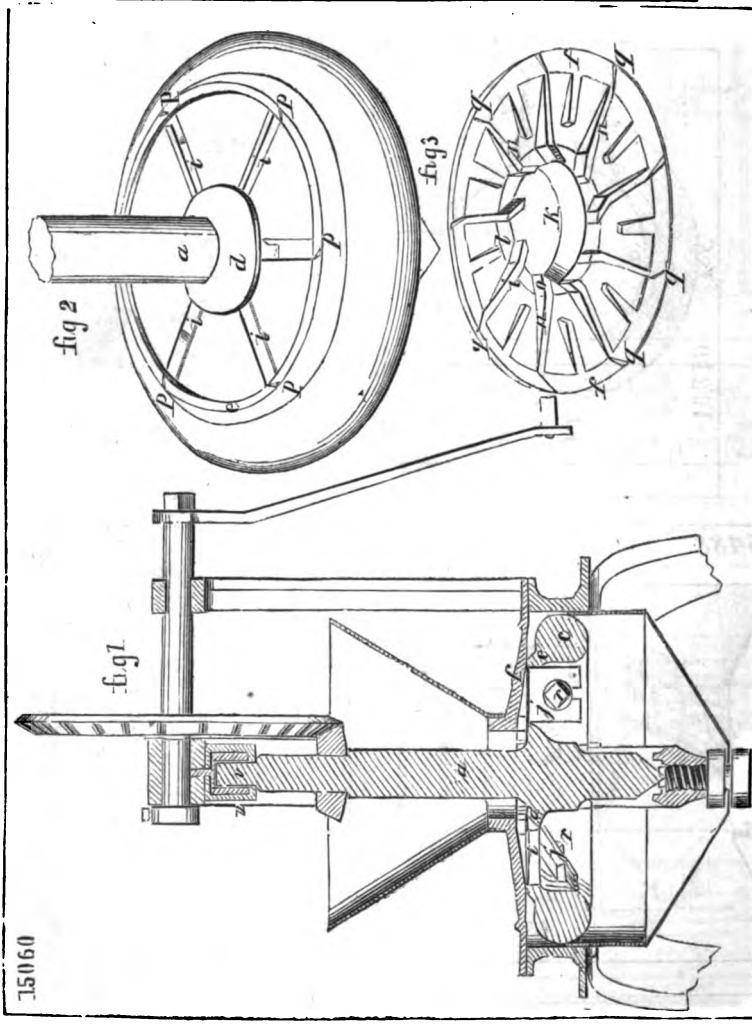

Digitized by Google

14227

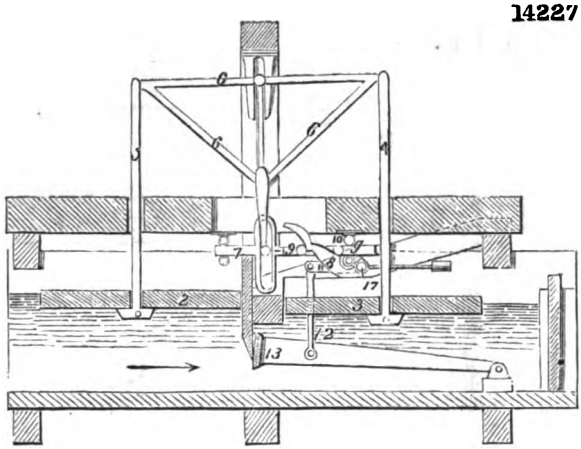

16249

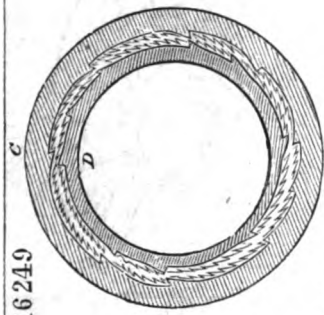

fig.1

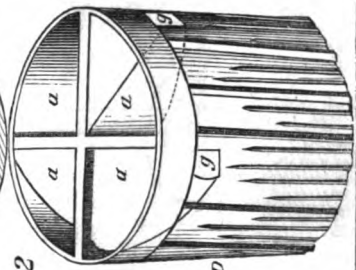

fig.2

15488

fig.1

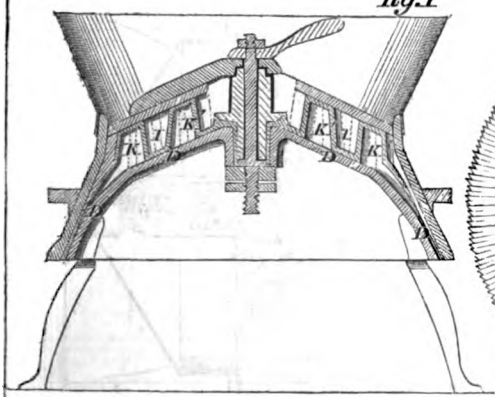

fig 2

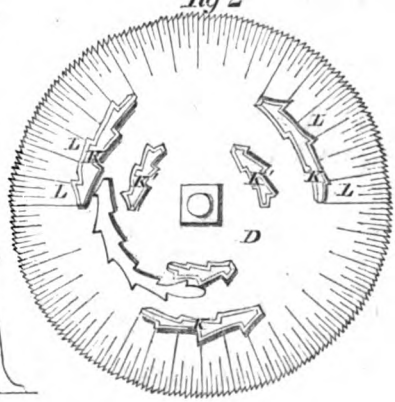

Digitized by Google

15841

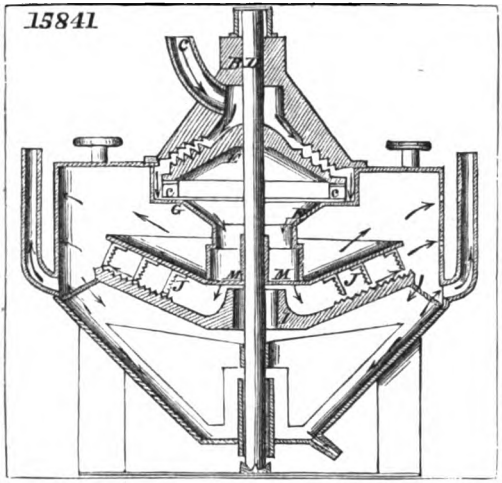

14164

fig 1

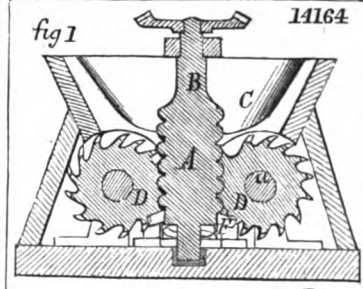

fig 3

fig 2

15680

fig. 1

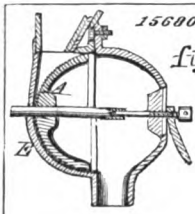

B fig. 2

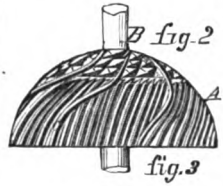

fig. 3

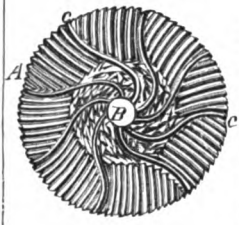

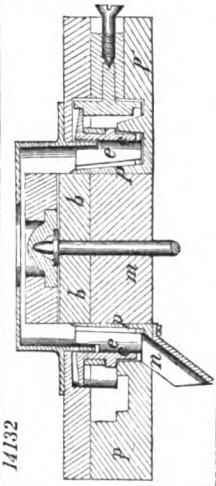

14132

16074

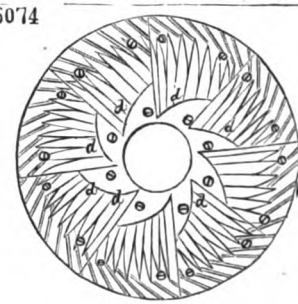

fig 1

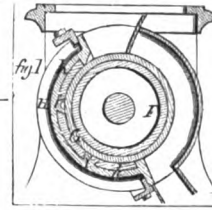

fig 2 14179

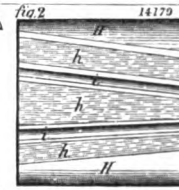

15868

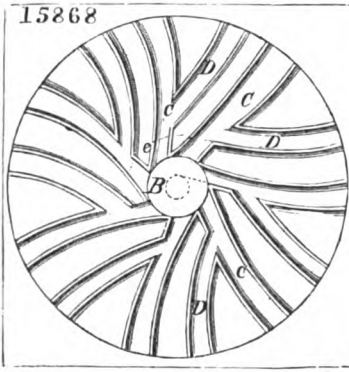

15346

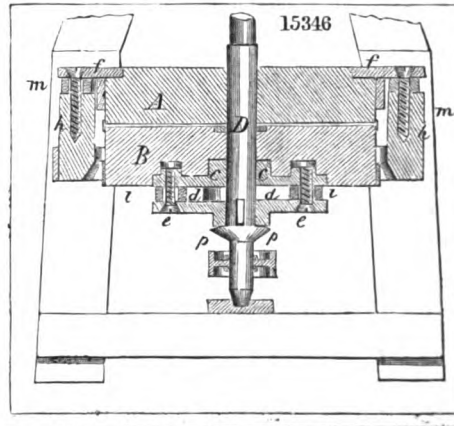

Digitized by Google

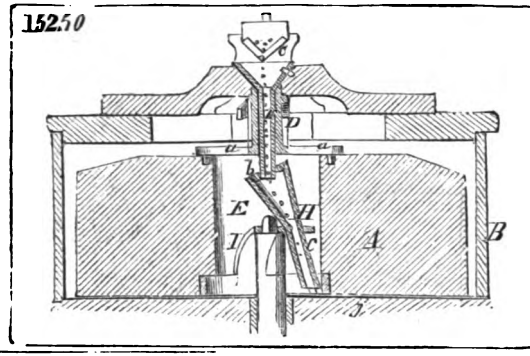

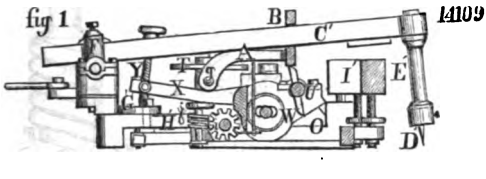

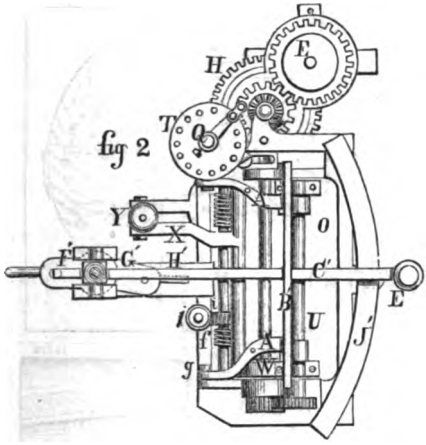

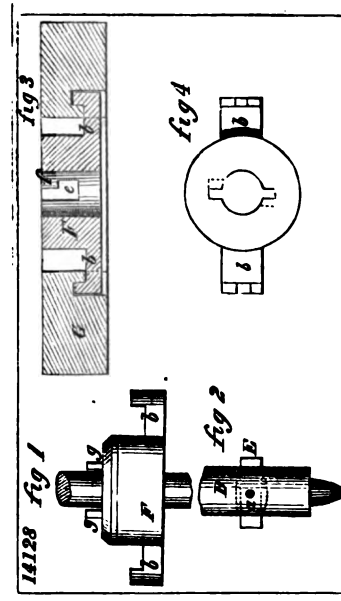

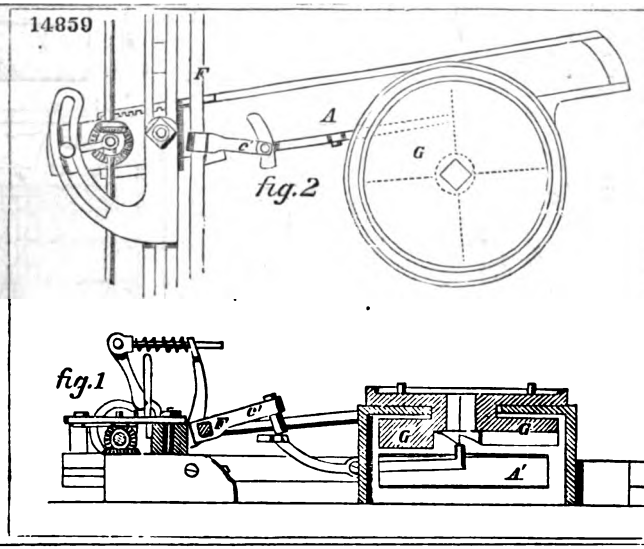

Digitized by Google

16303

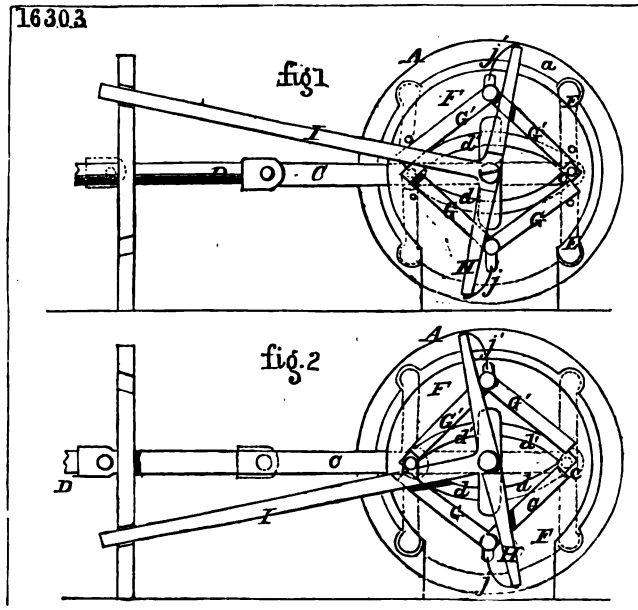

14473

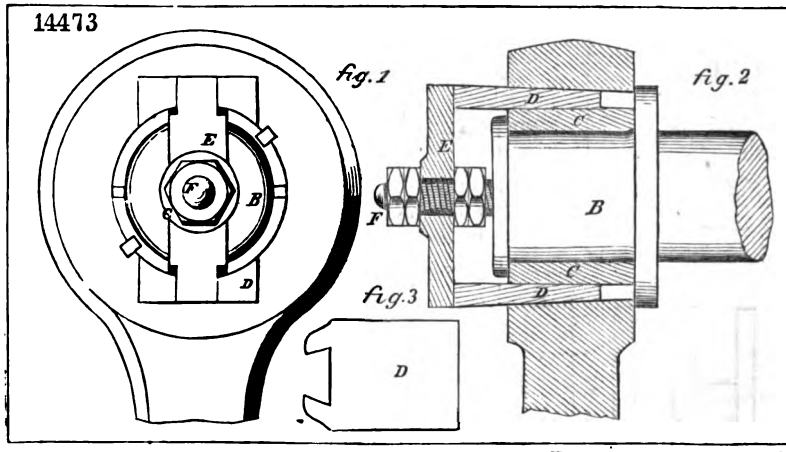

15978

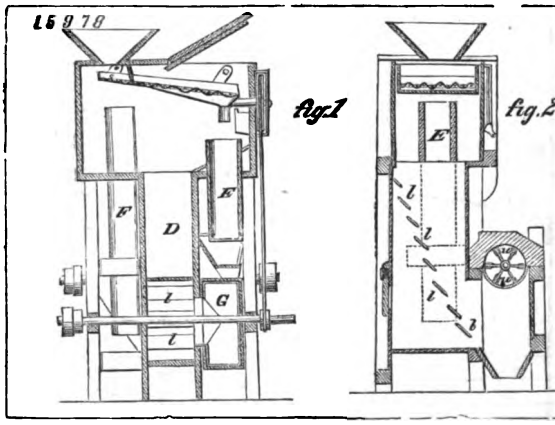

15442

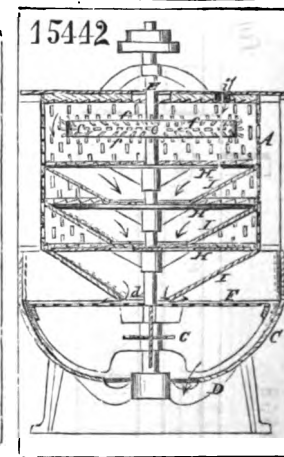

16155

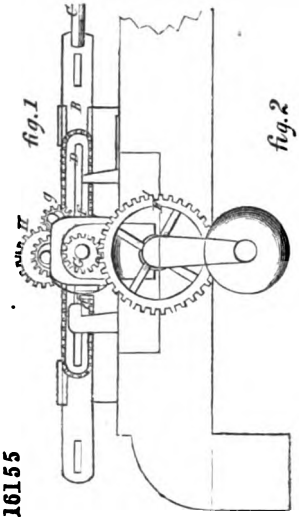

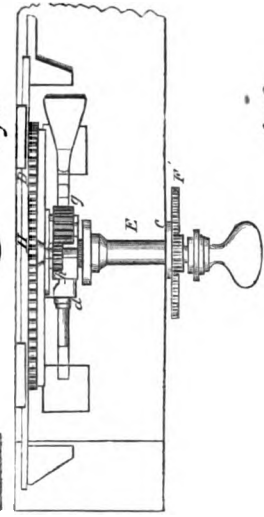

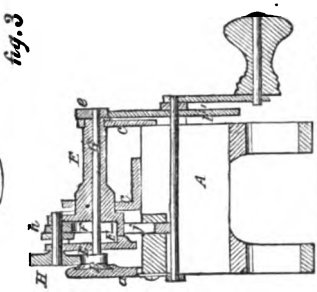

15284

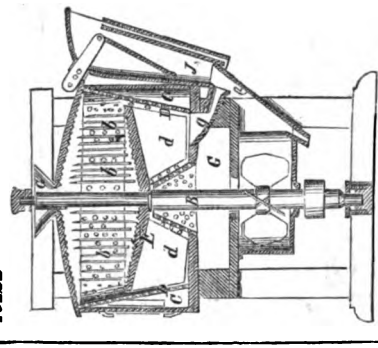

14568

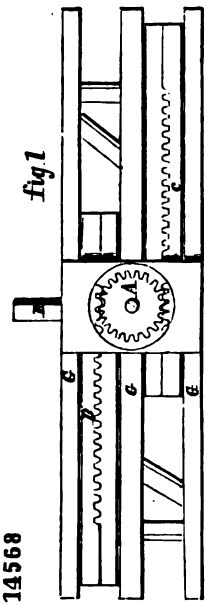

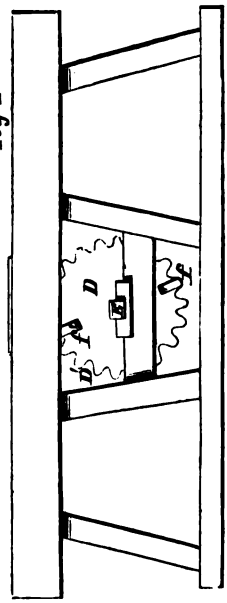

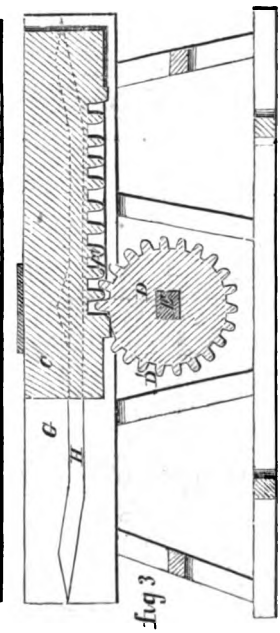

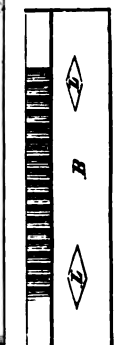

Digitized by Google

14329
fig.1

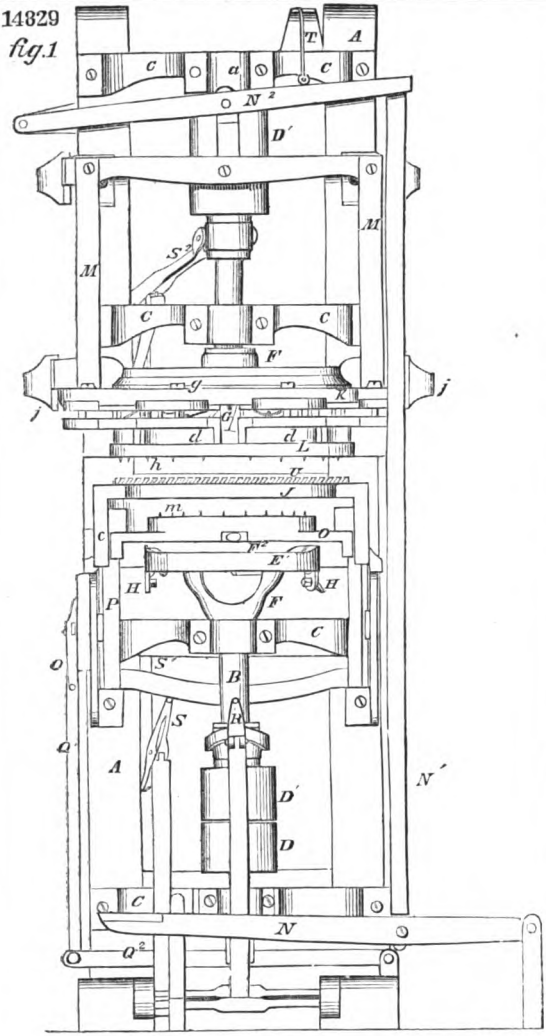

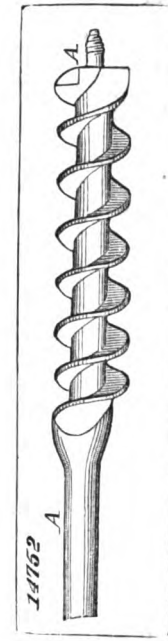

fig.2

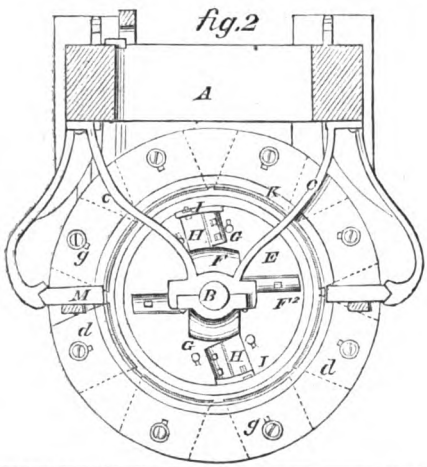

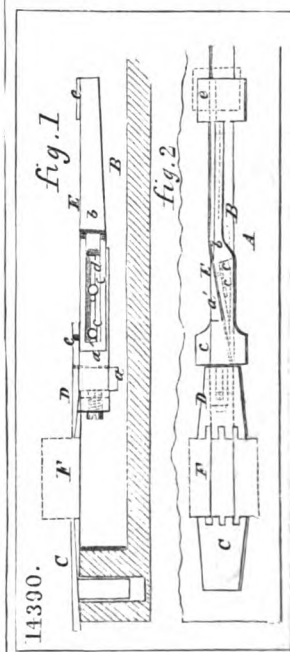

Digitized by Google

14511

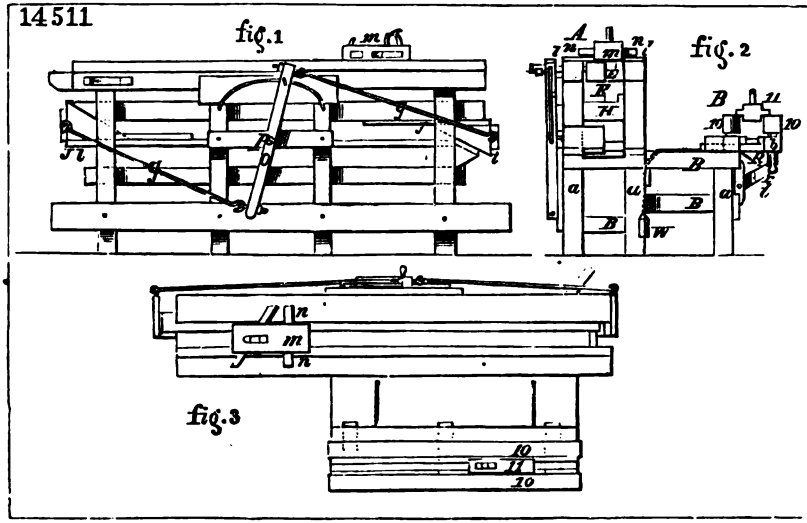

15739

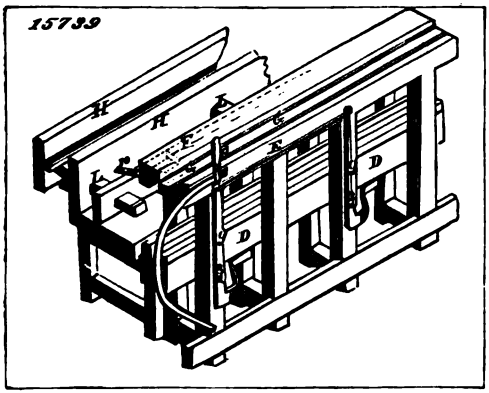

15763

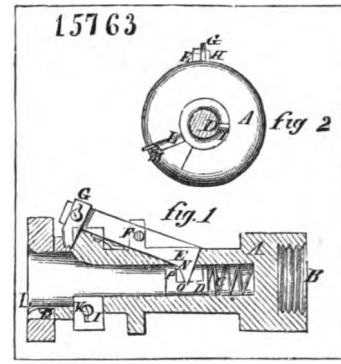

14569

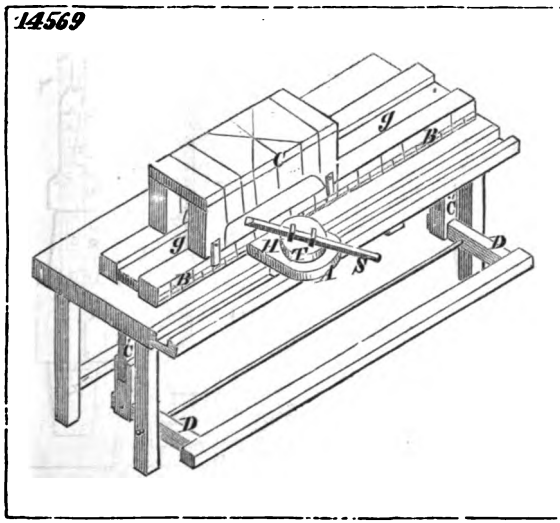

15105

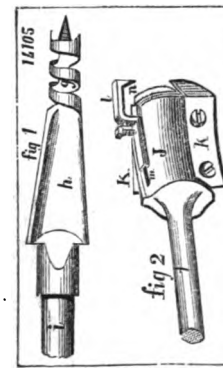

Digitized by Google

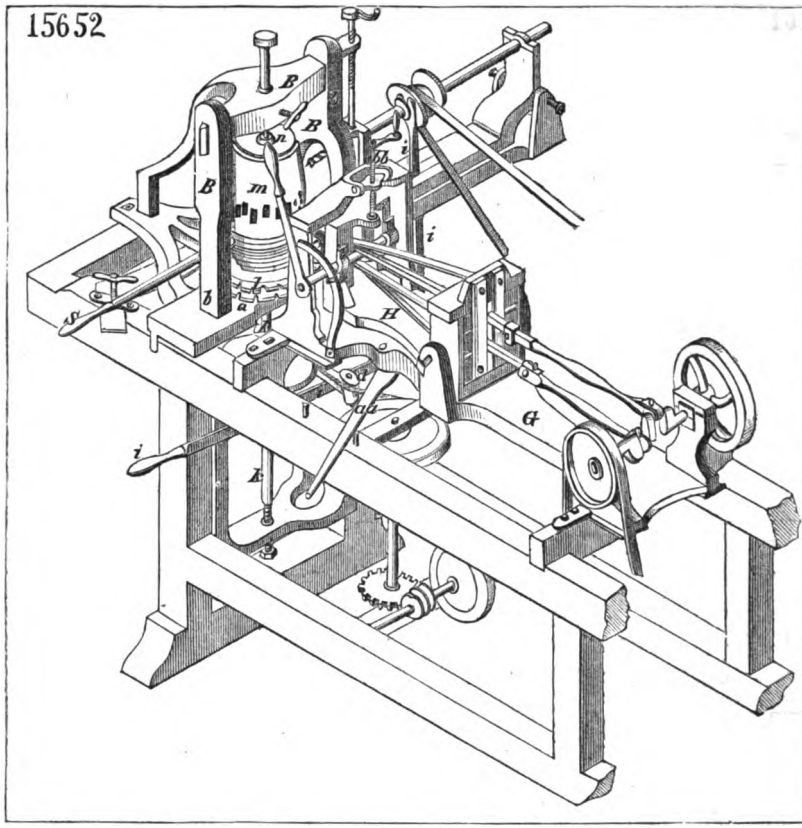

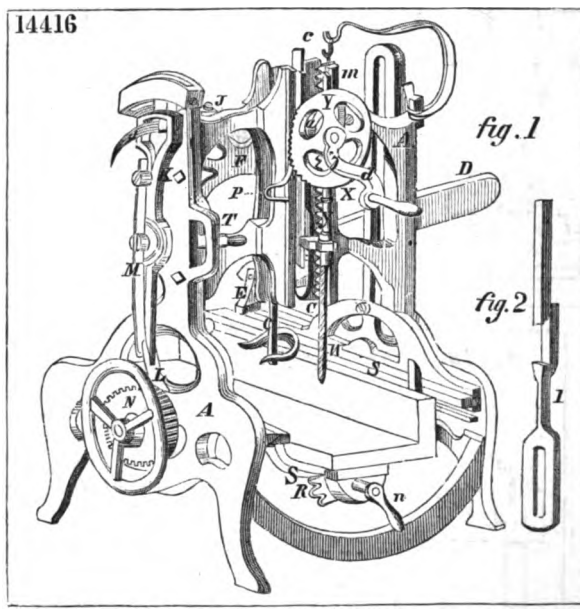

Digitized by Google

16101

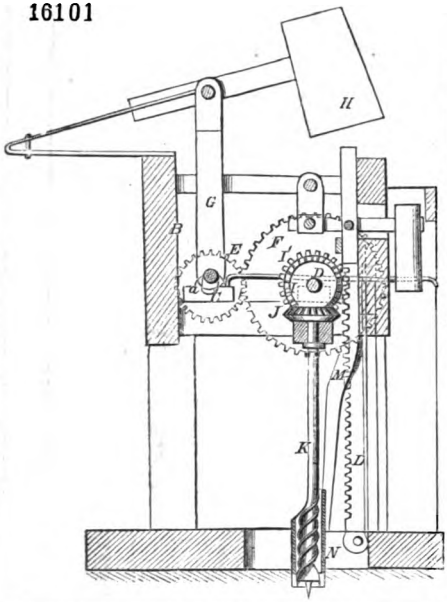

14223

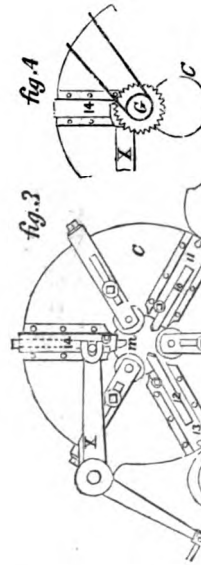

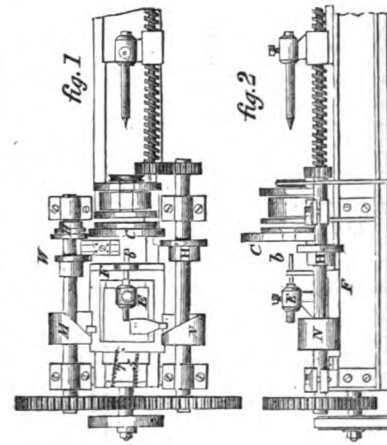

14327

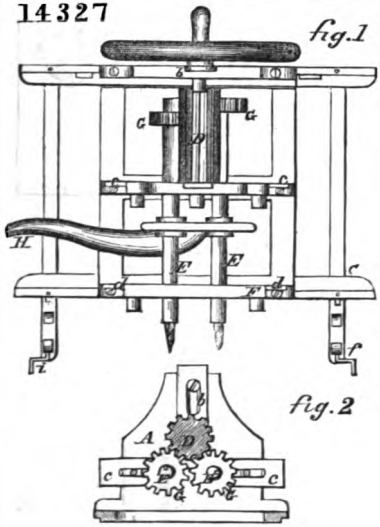

15678

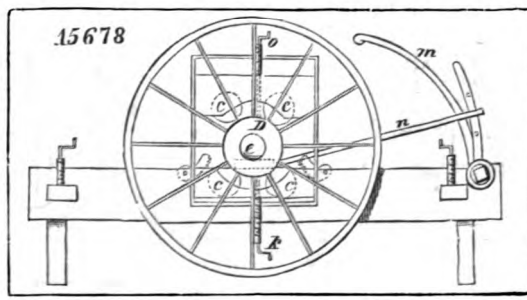

Digitized by Google

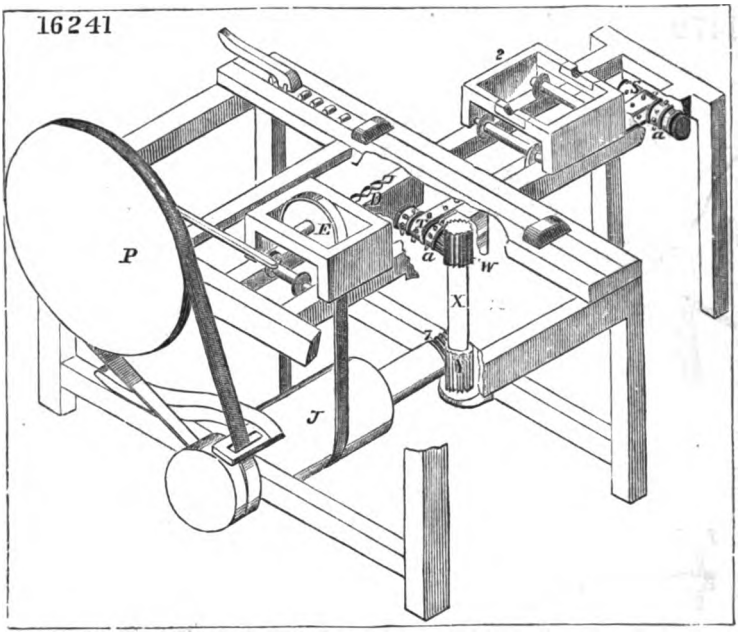

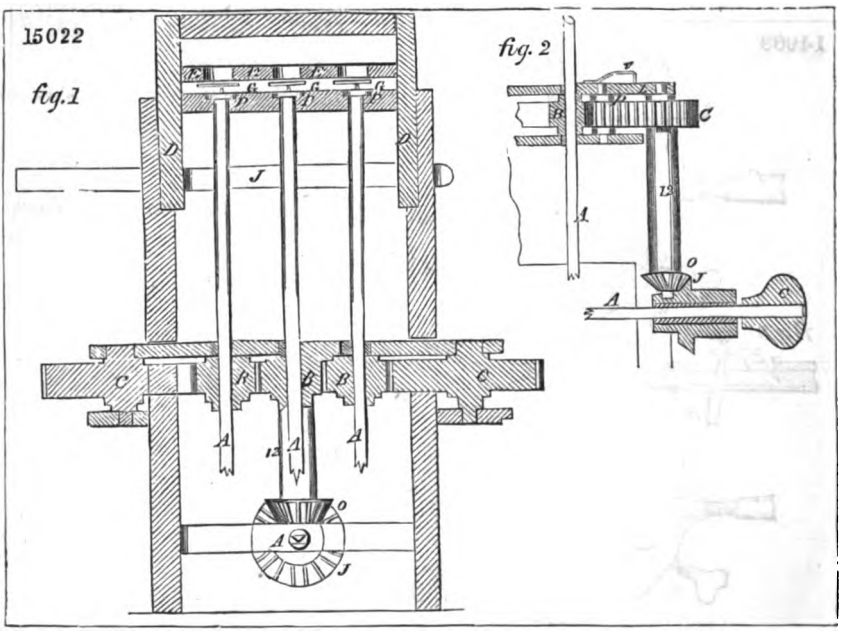

Digitized by Google

14479

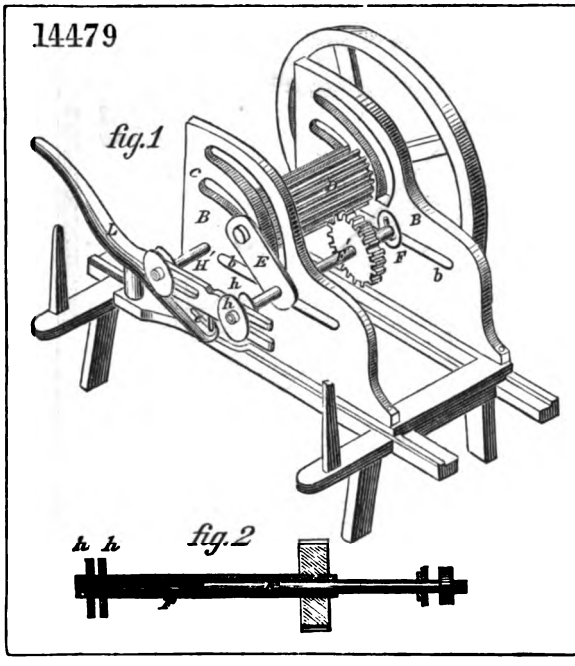

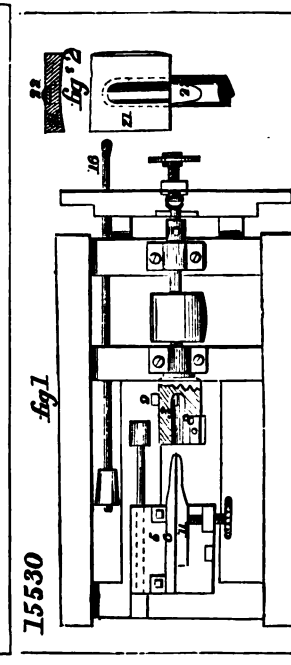

15530

14968

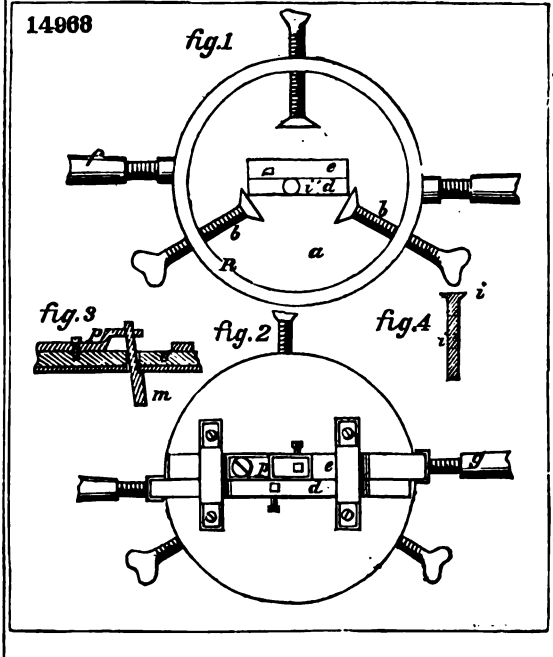

14984

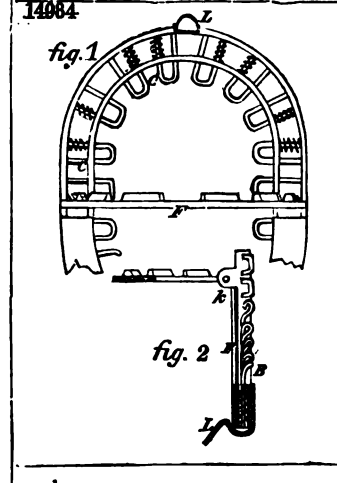

Digitized by Google

14329

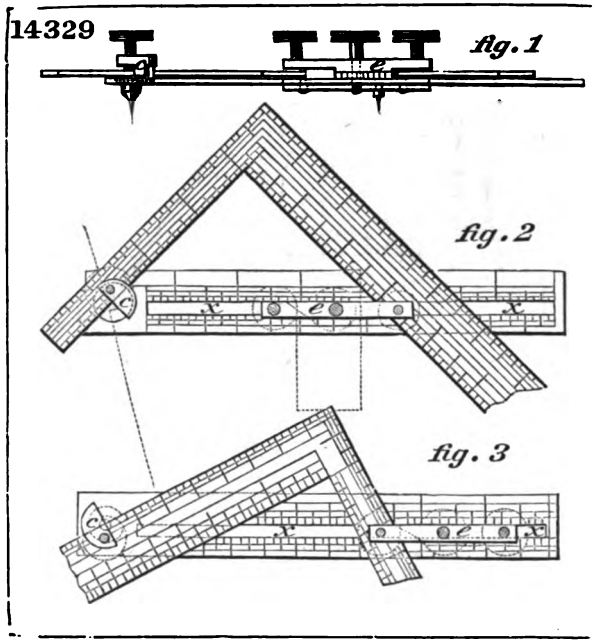

14676

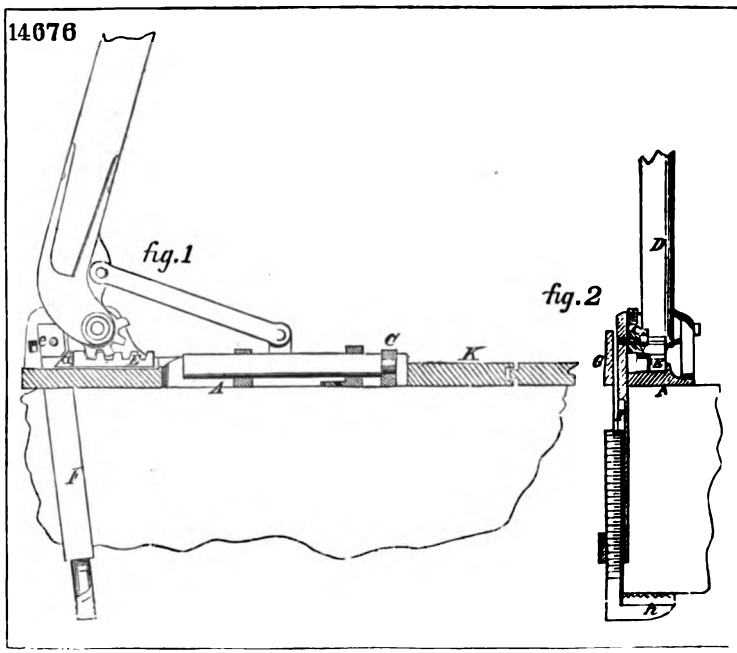

Digitized by Google

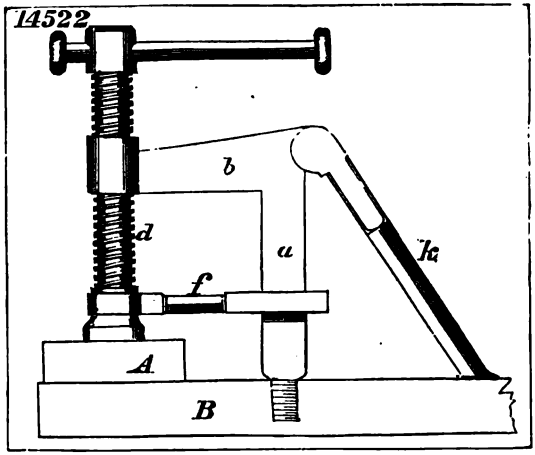

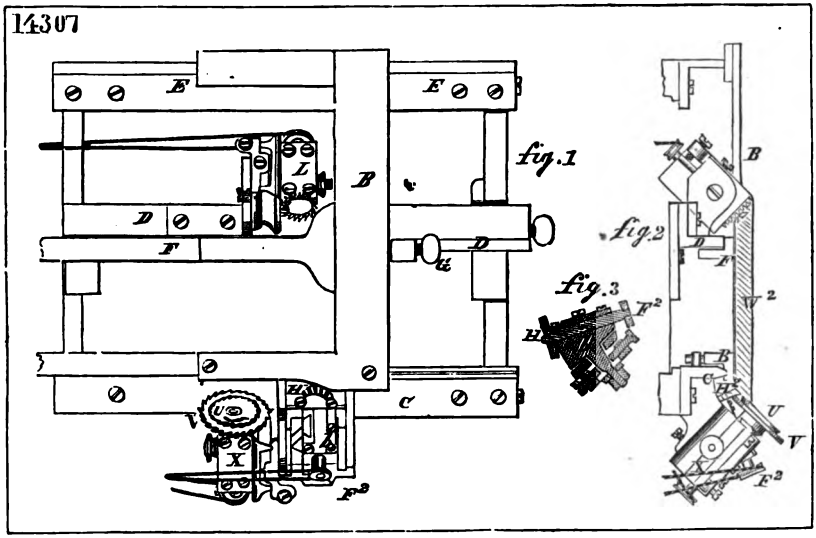

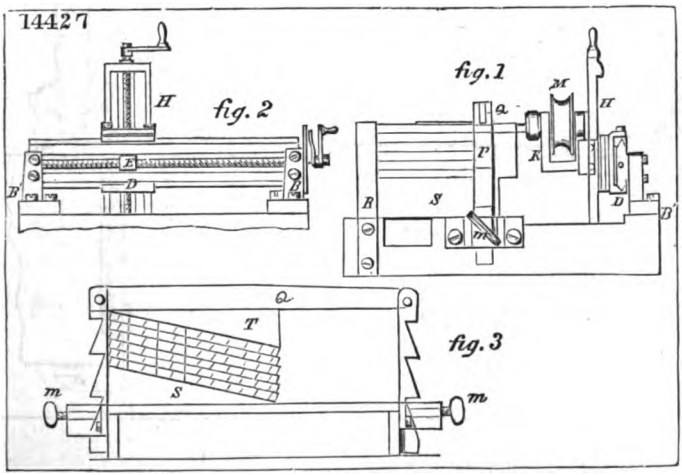

Digitized by Google

15301

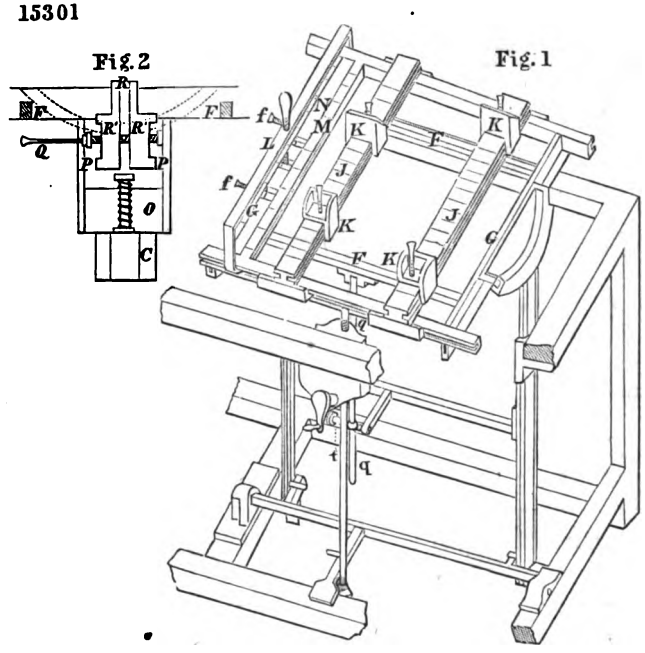

15445

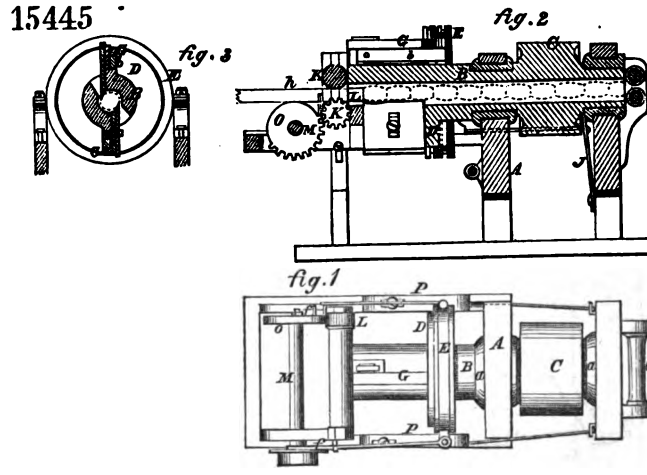

Digitized by Google

14987

fig 1

fig 4

fig 2

fig 3

fig 5

15859

Digitized by Google

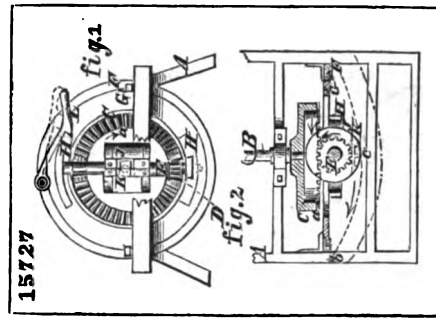

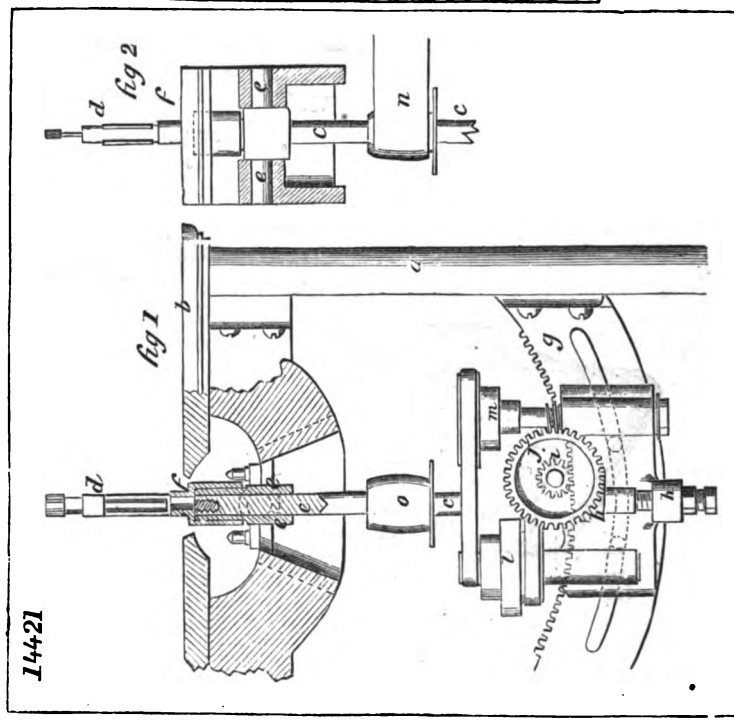

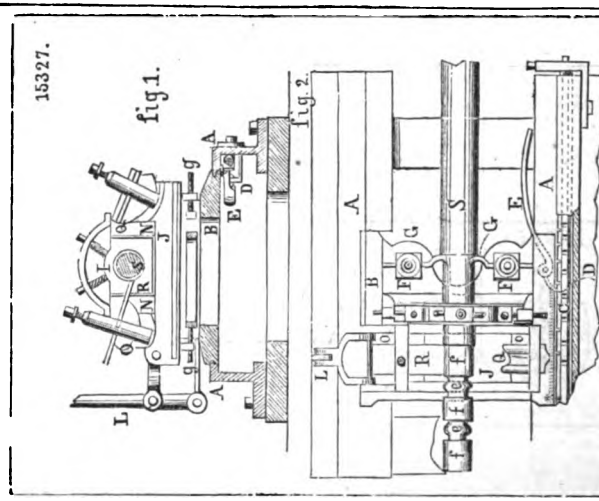

Digitized by Google

15153

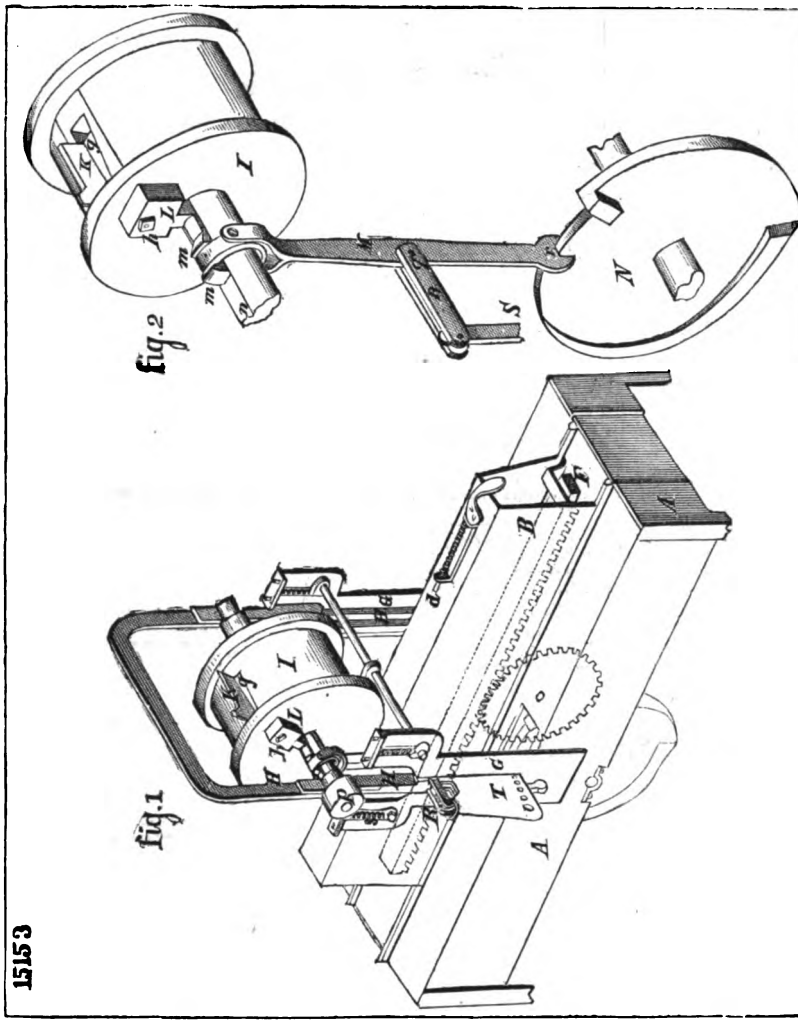

15556

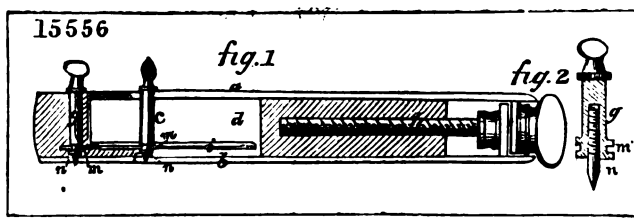

Digitized by Google

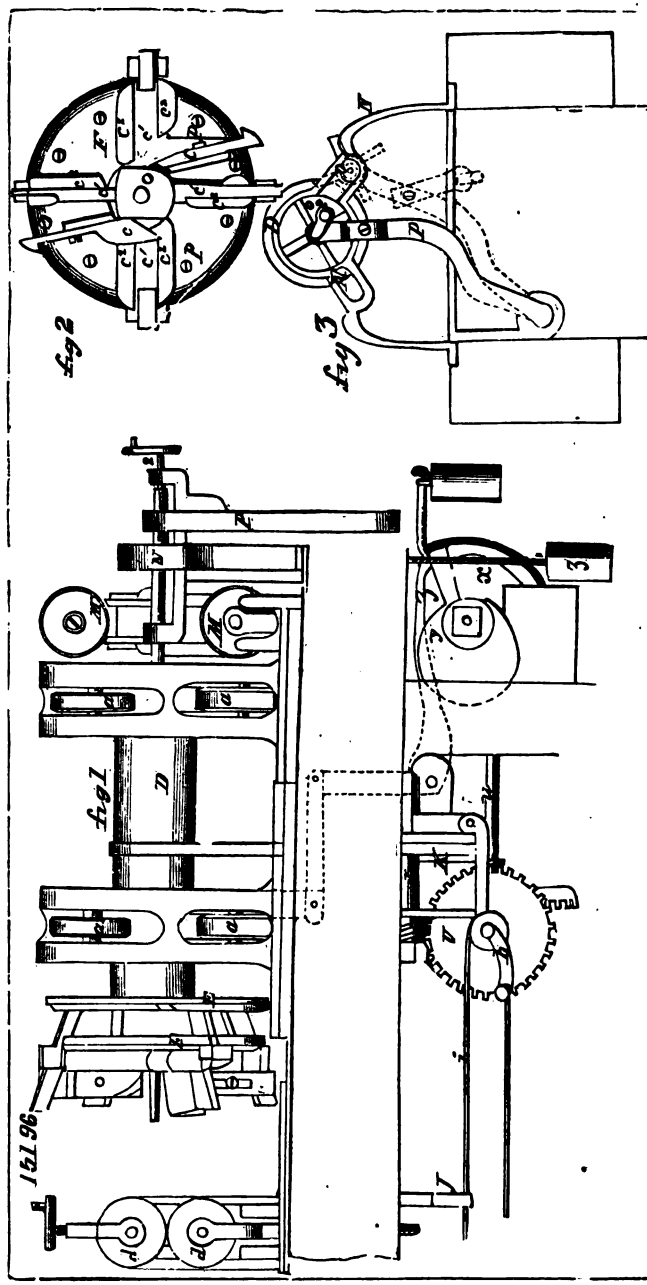
fig 2
fig 3
fig 1
96 174

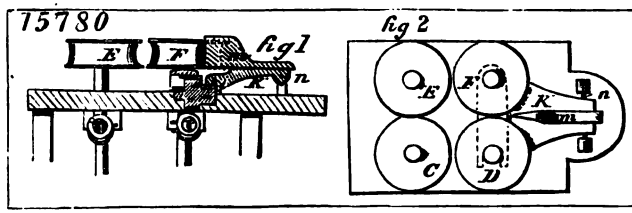
75780
fig 1
fig 2

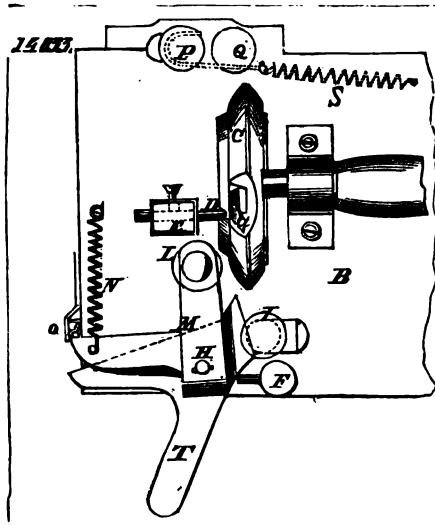

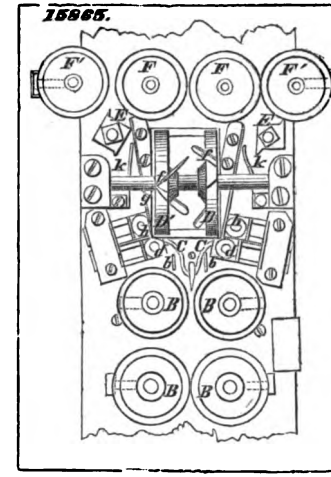

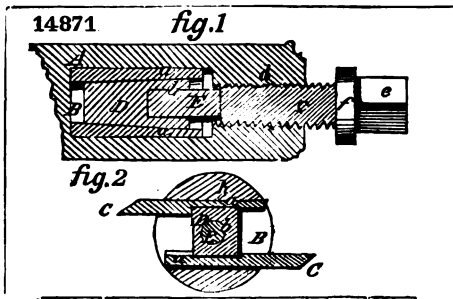

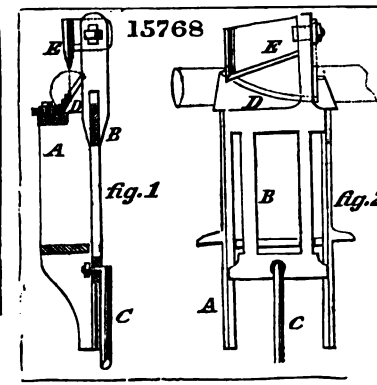

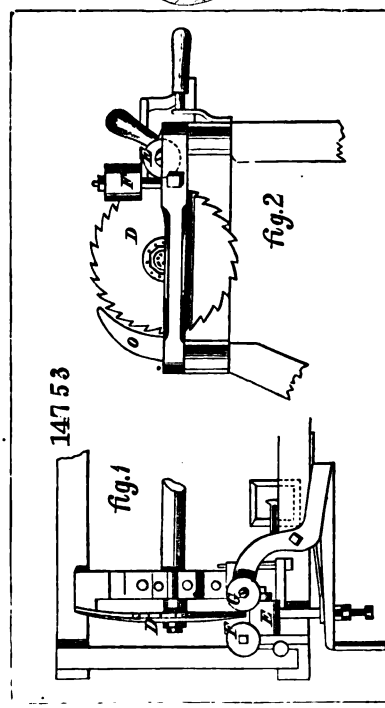

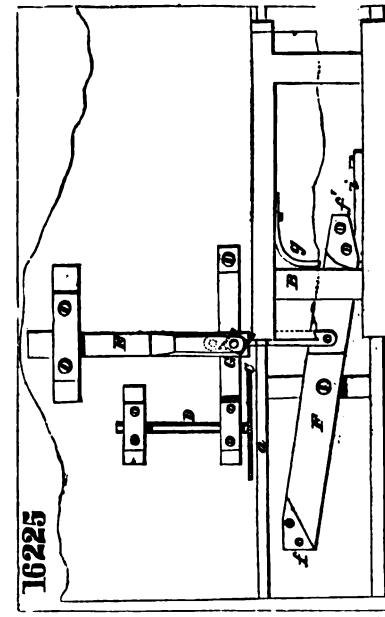

Digitized by Google

16241

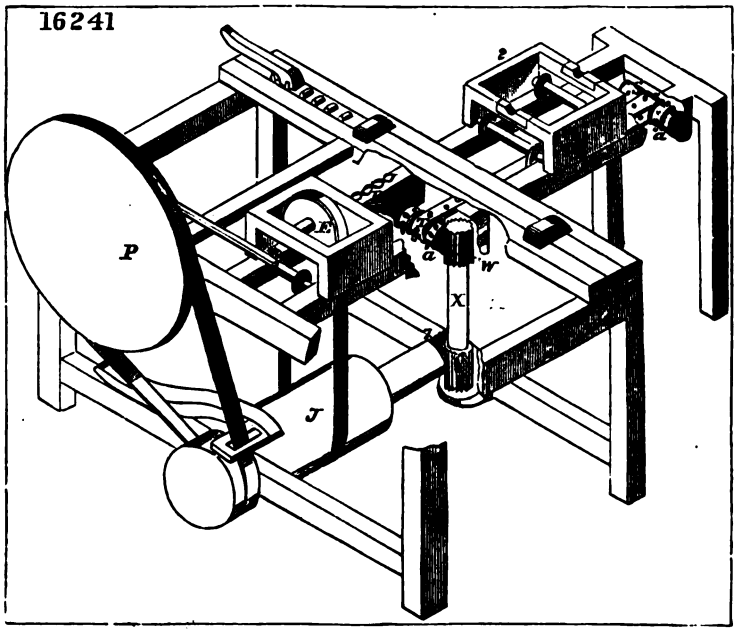

15022

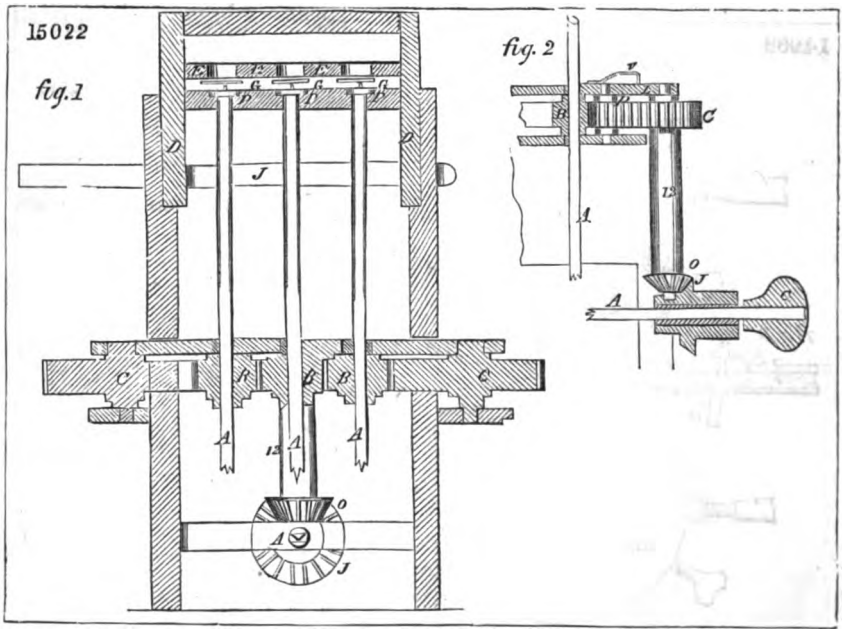

Digitized by Google

14479

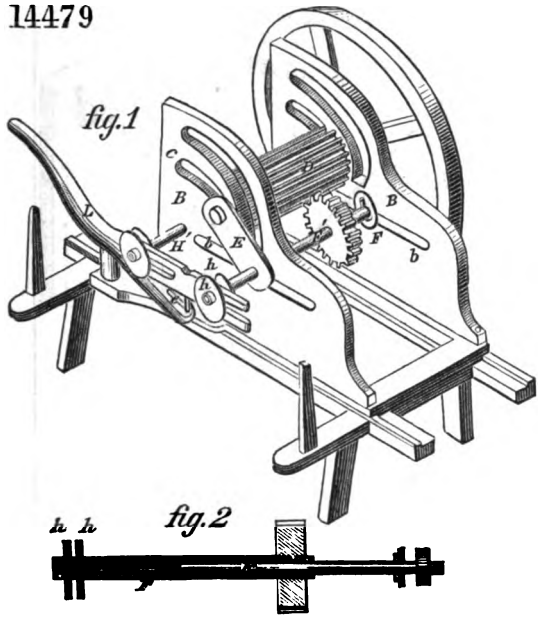

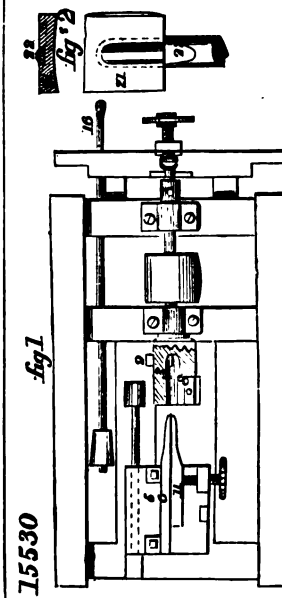

15530

14968

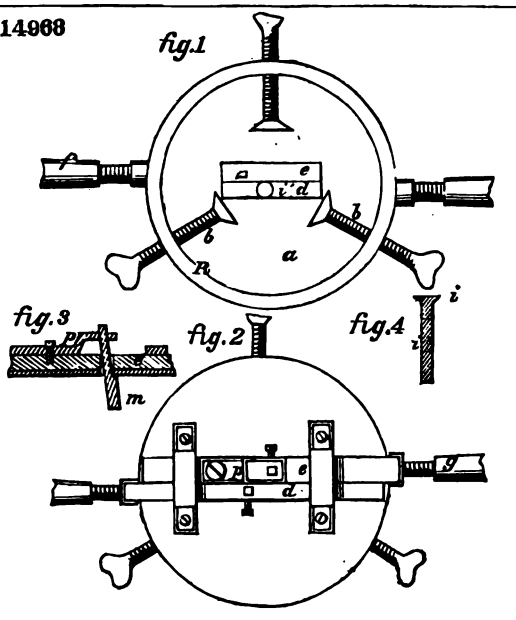

14984

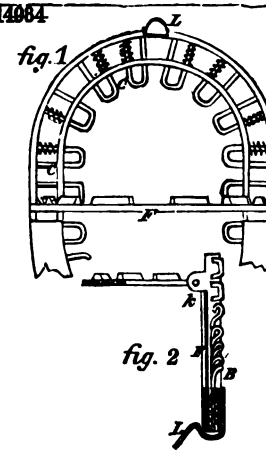

Digitized by Google

14329

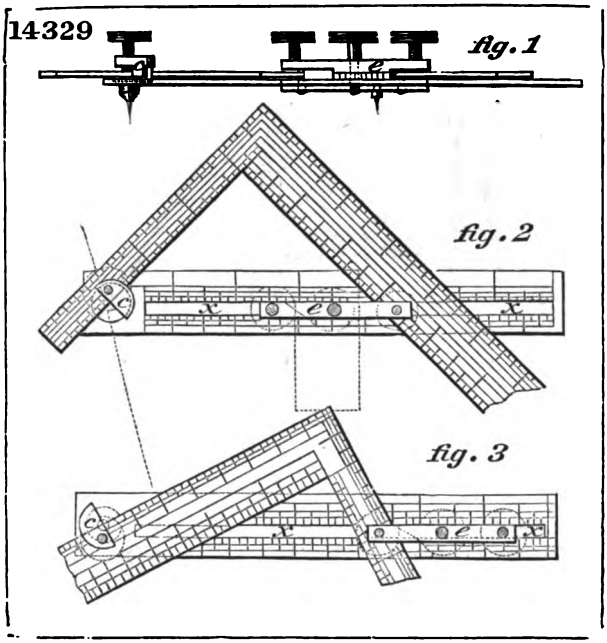

14676

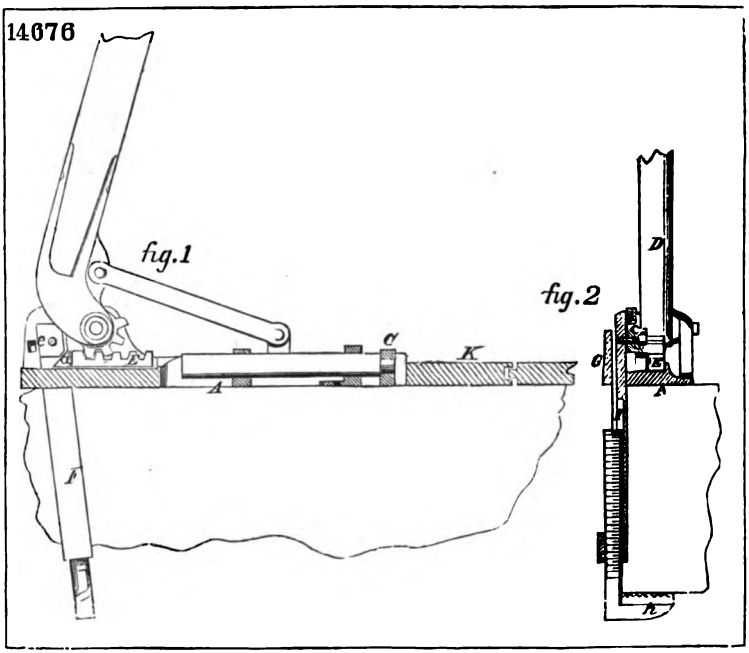

Digitized by Google

14522

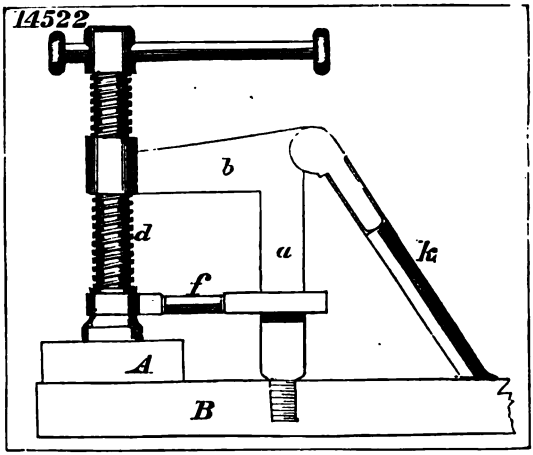

14307

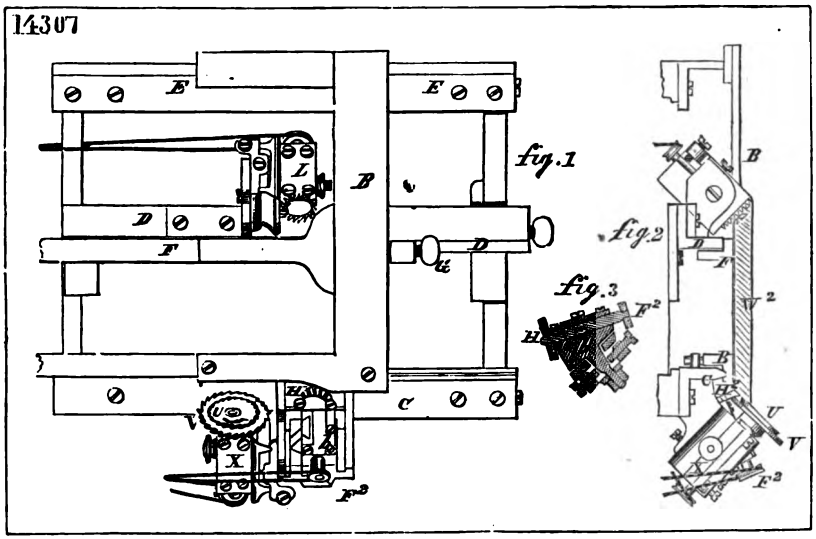

14427

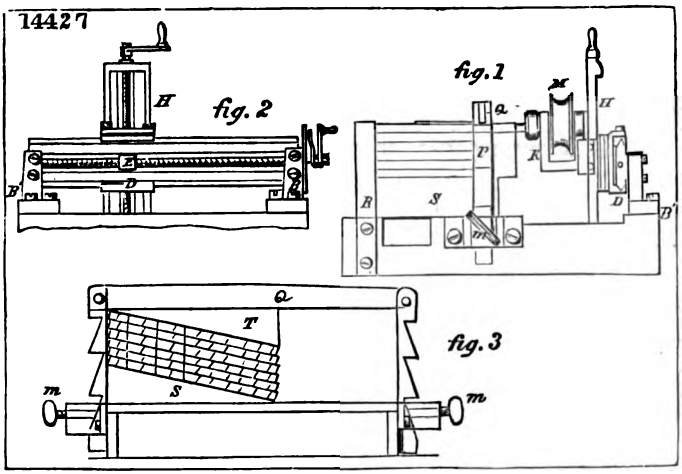

Digitized by Google

15301

Fig. 2

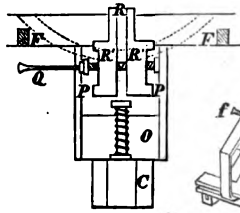

Fig. 1

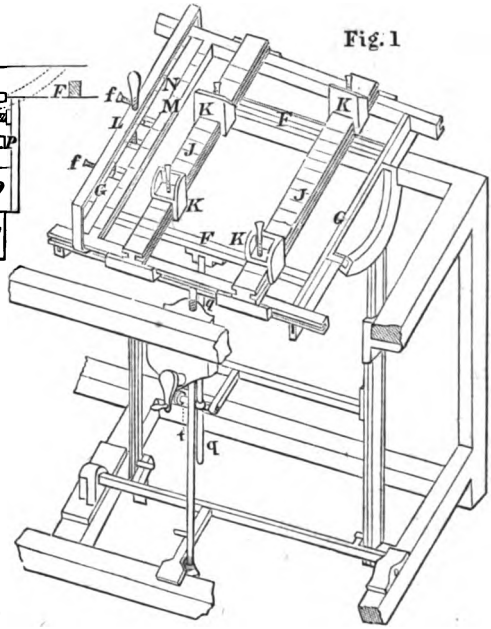

15445

fig. 3

fig. 2

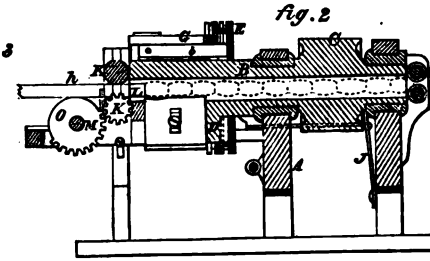

fig. 1

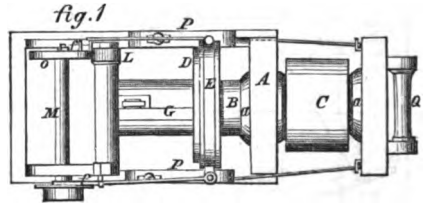

Digitized by Google

14987

fig 1

fig 4

fig 2

fig 3

fig 5

15859

Digitized by Google

15727

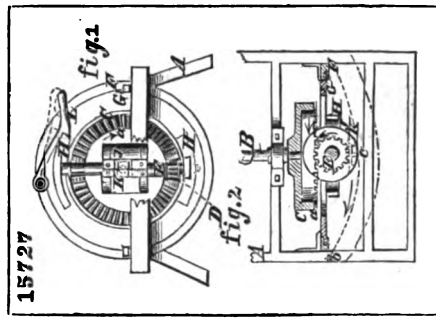

14421

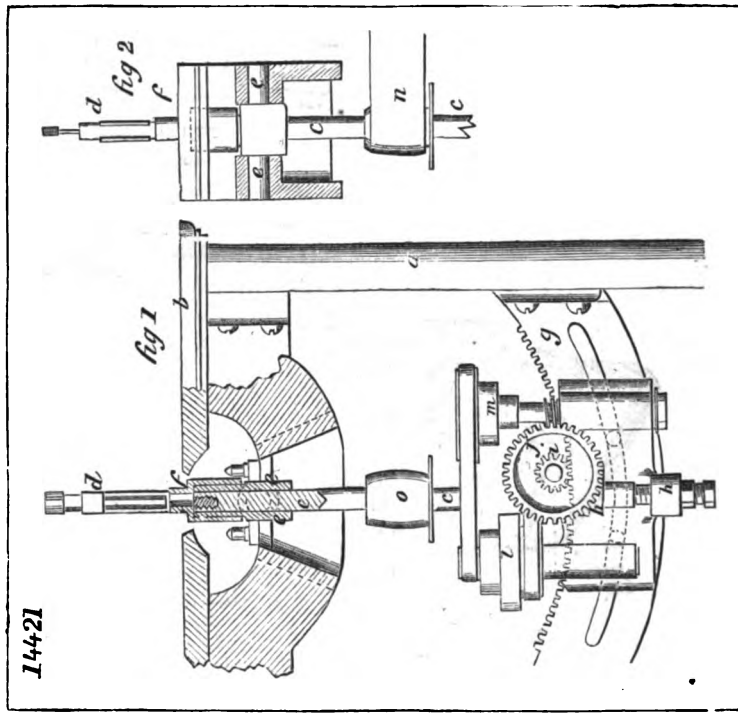

15327.

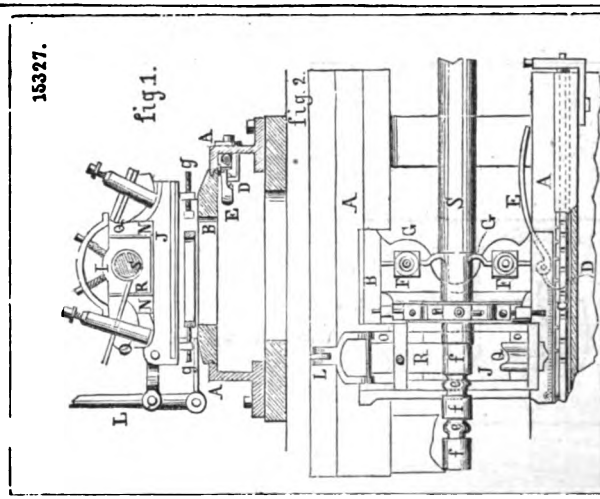

Digitized by Google

15153

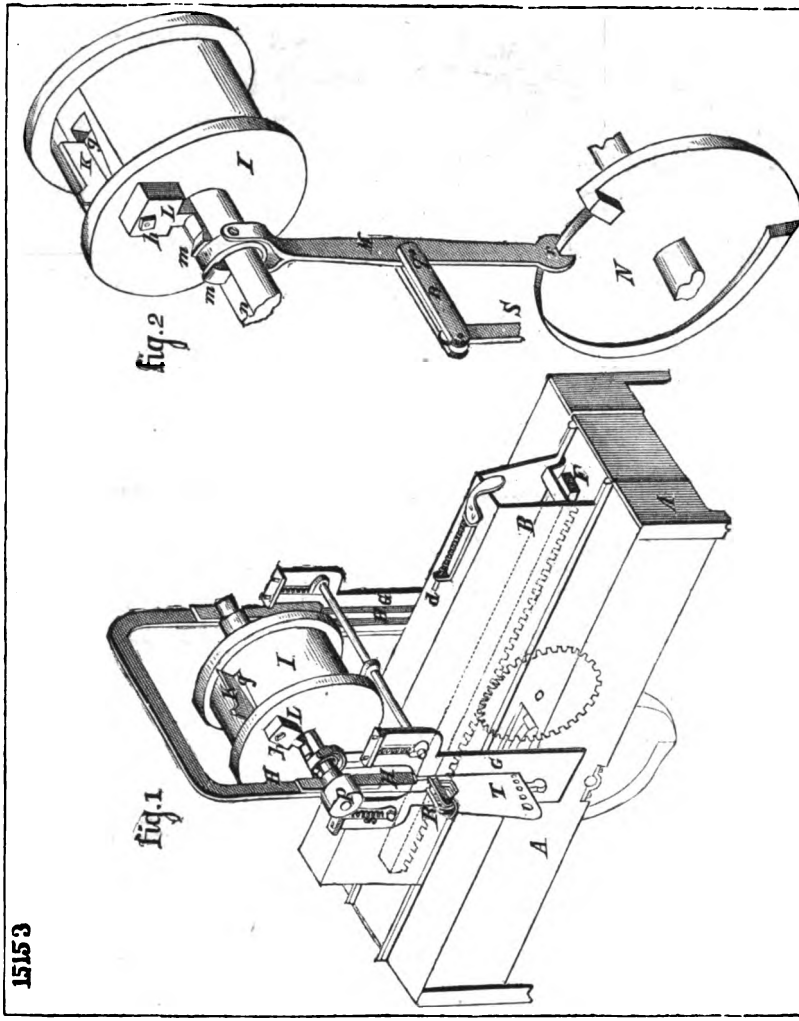

15556

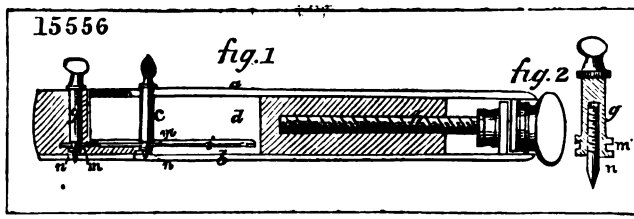

Digitized by Google

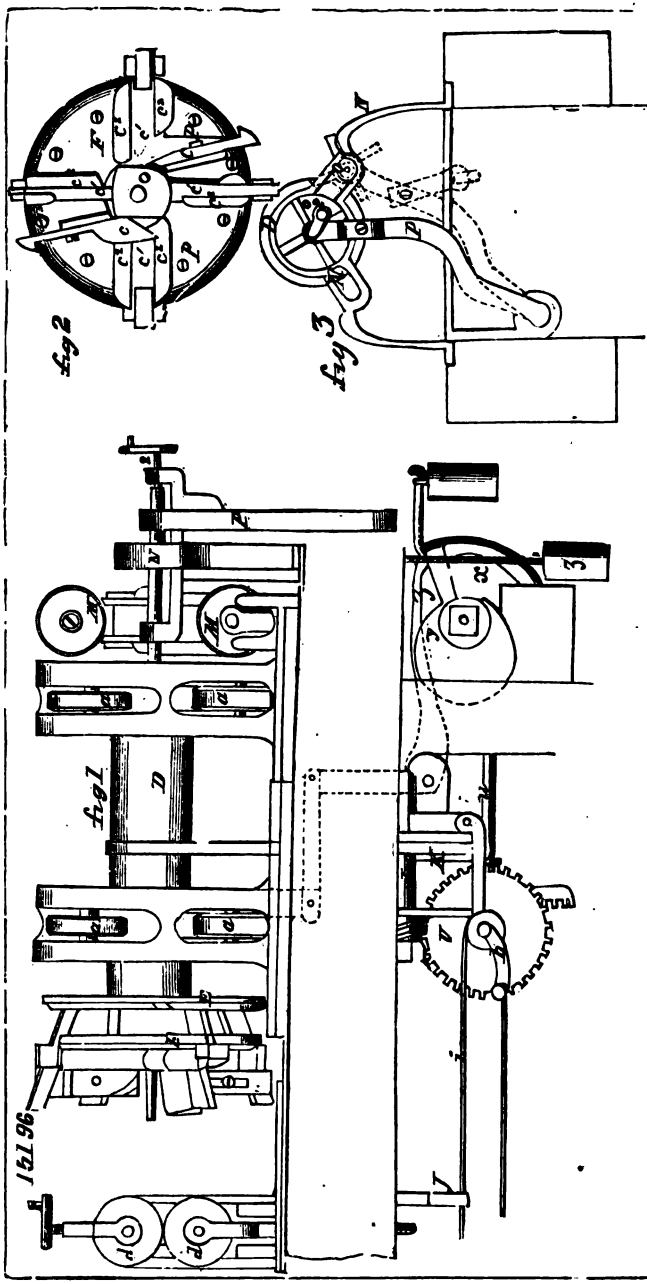

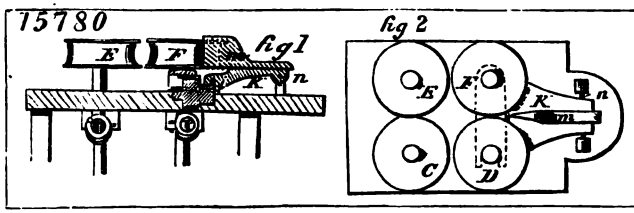

Digitized by Google

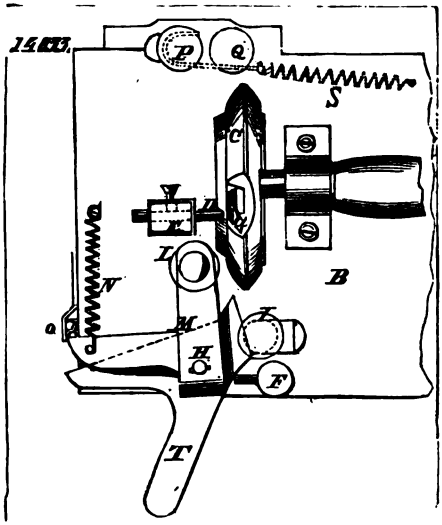

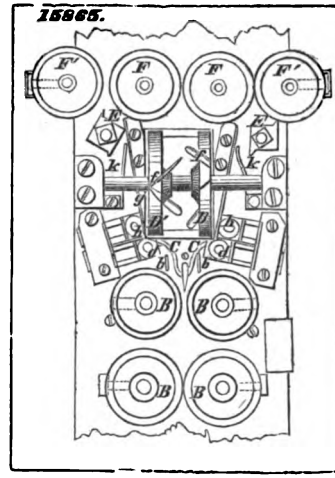

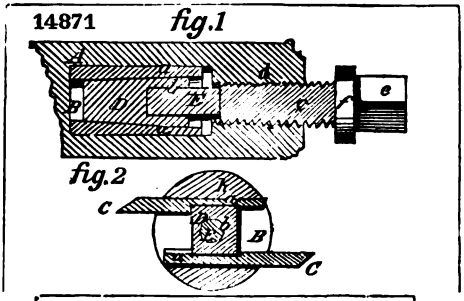

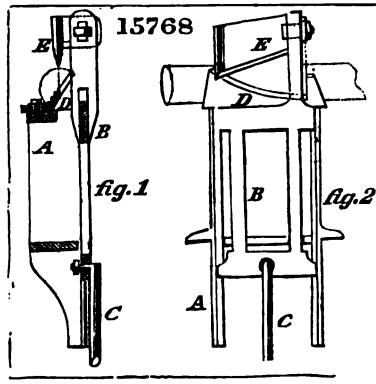

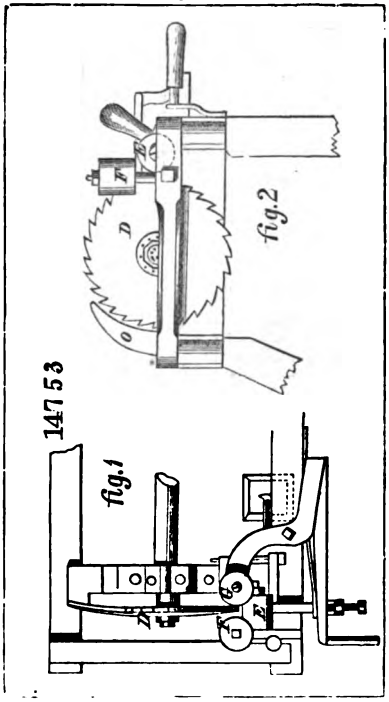

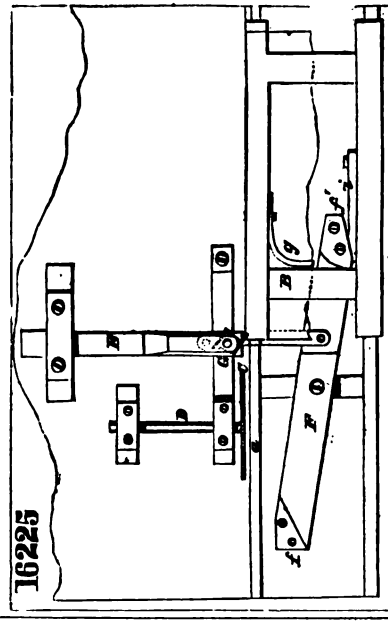

Digitized by Google

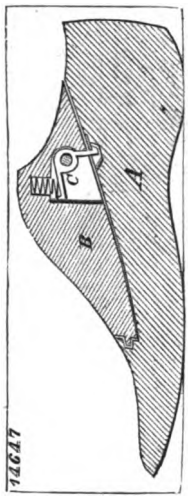

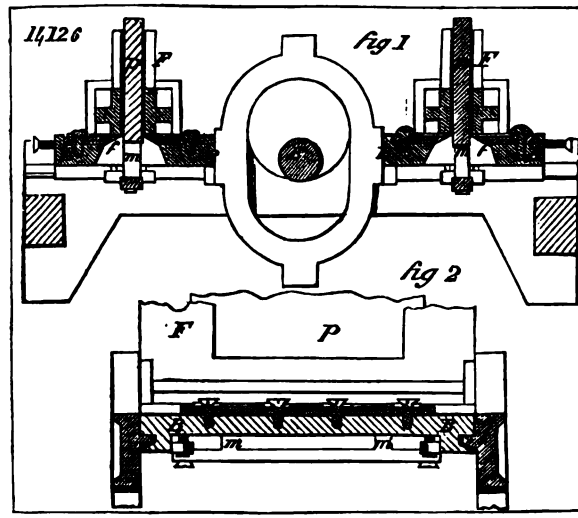

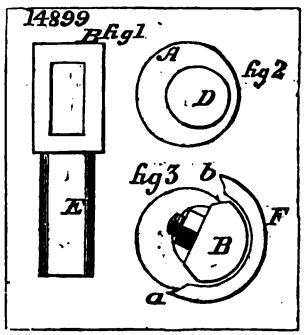

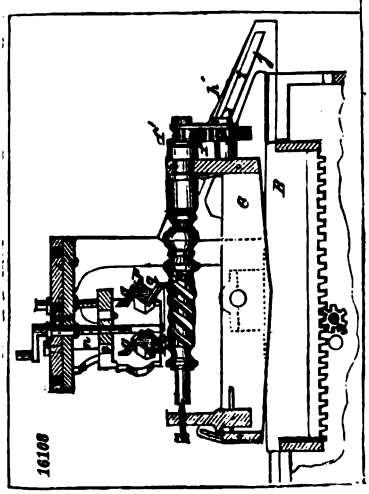

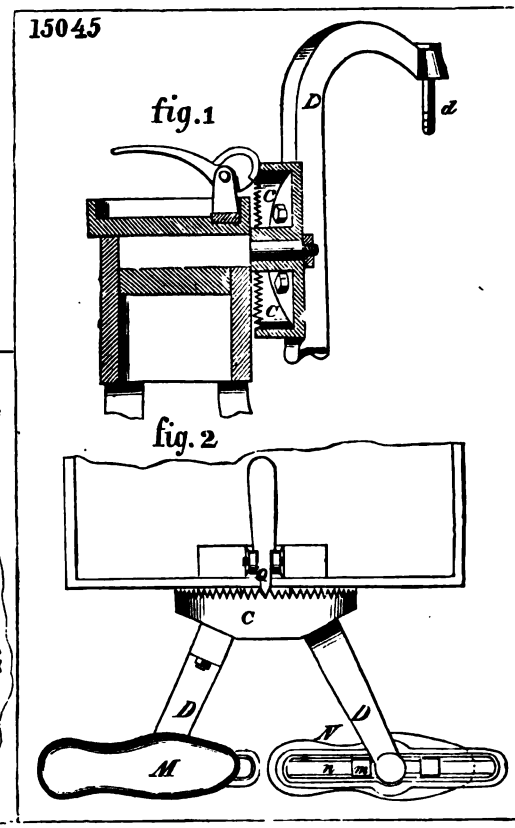

Digitized by Google

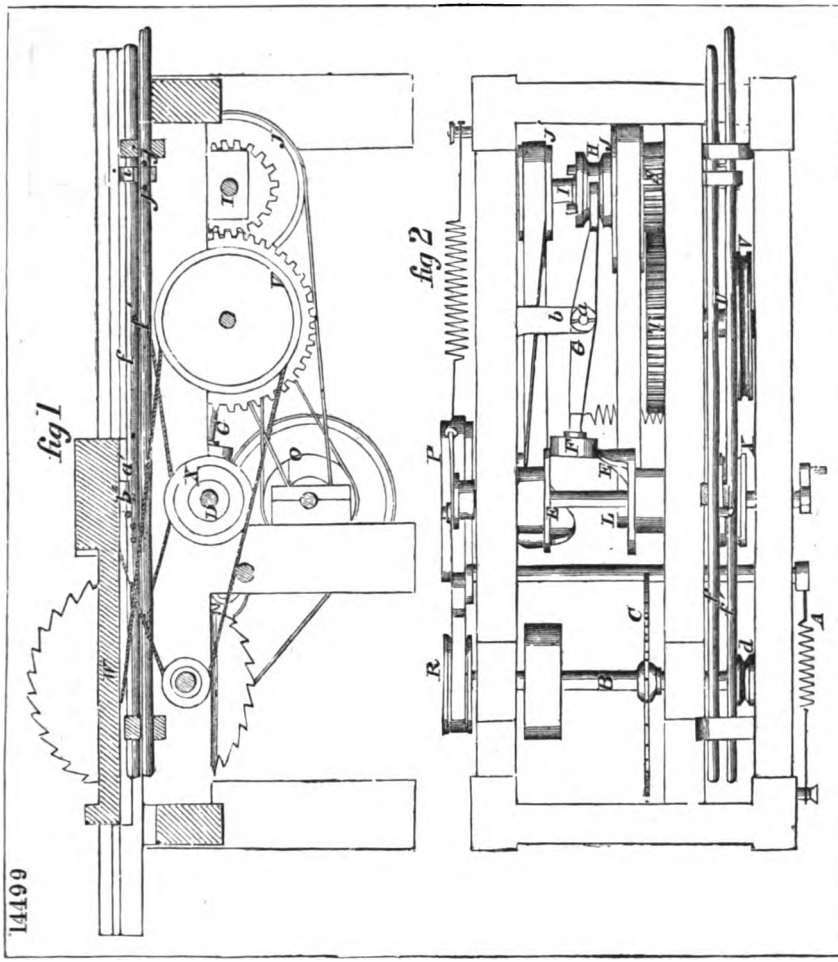

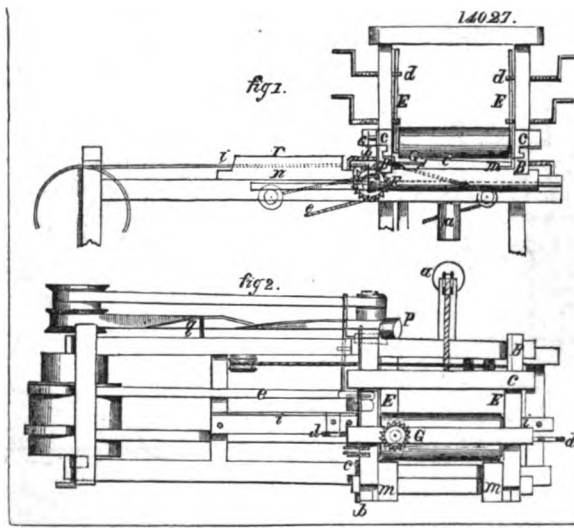

Digitized by Google

14578

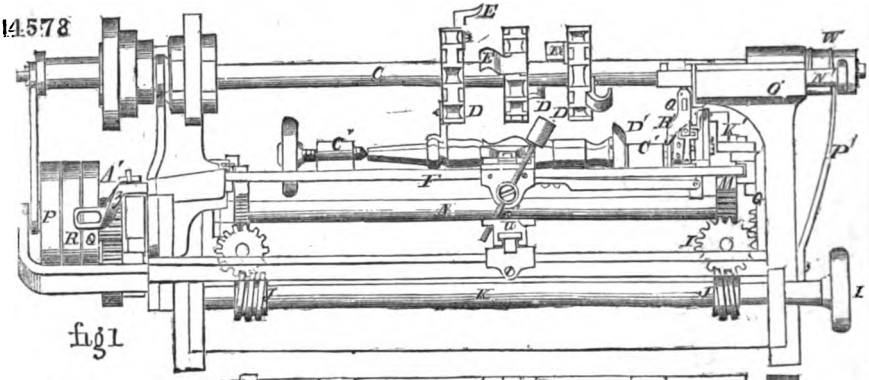

fig 1

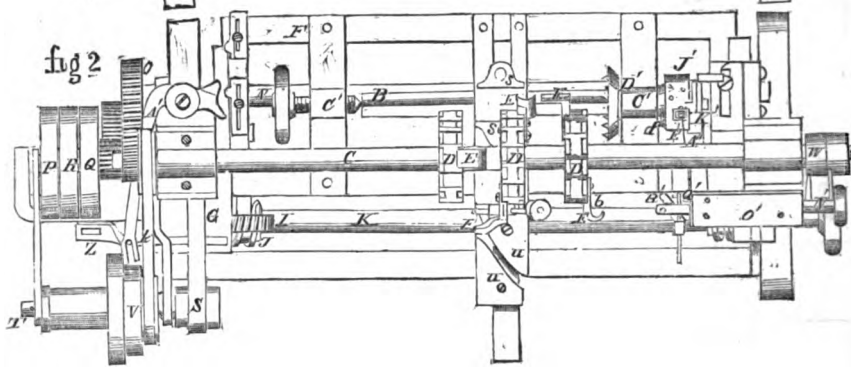

fig 2

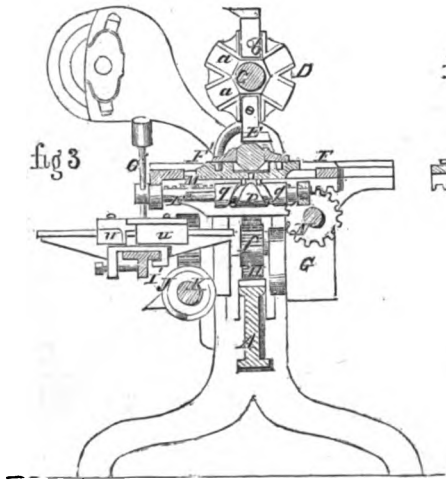

fig 3

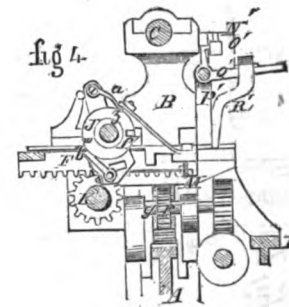

fig 4

Digitized by Google

14041

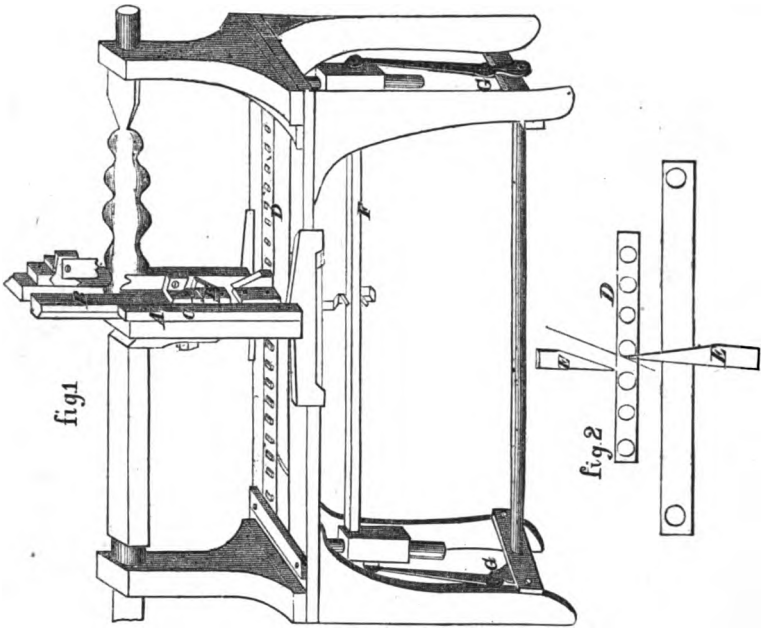

14787

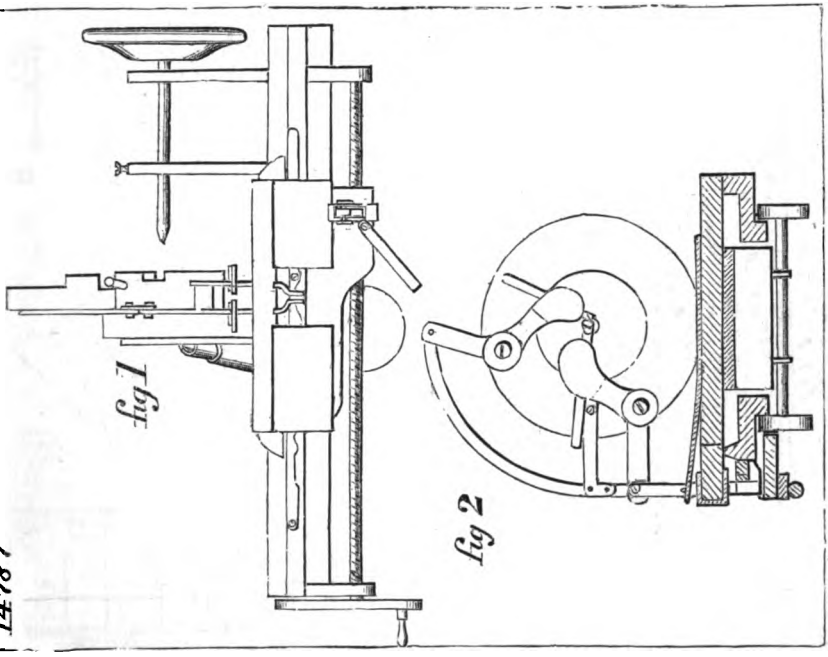

Digitized by Google

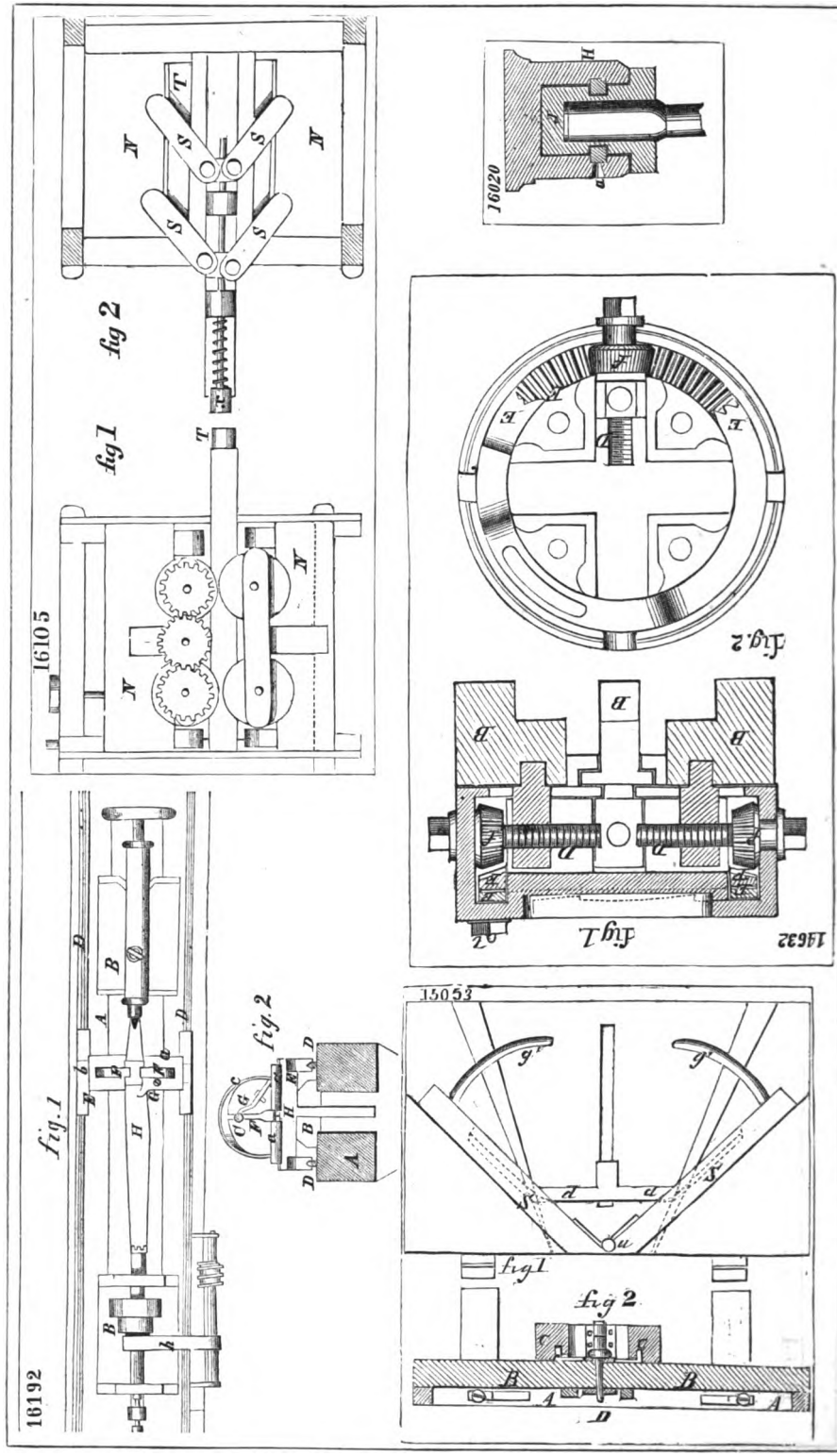

Digitized by Google

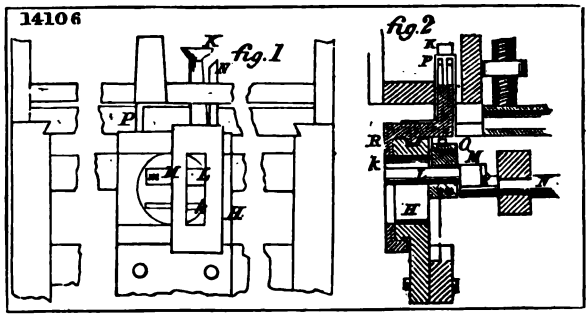

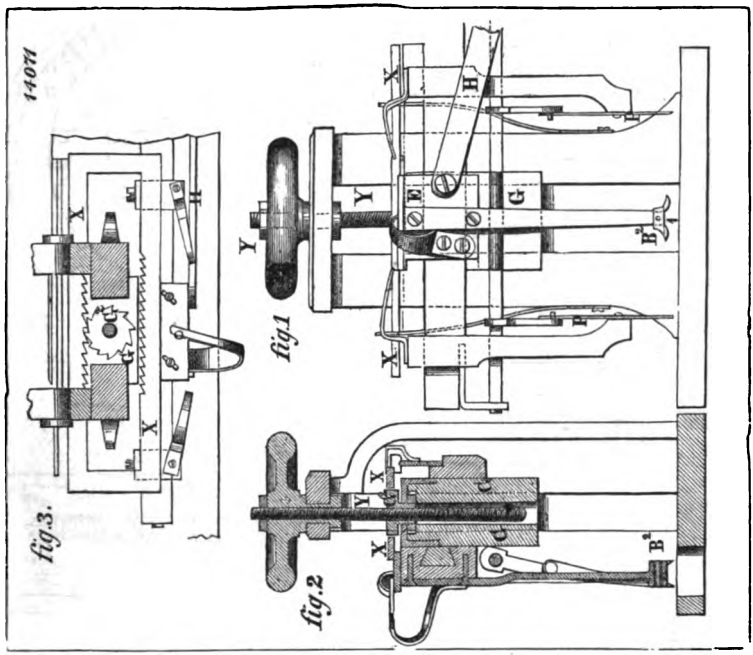

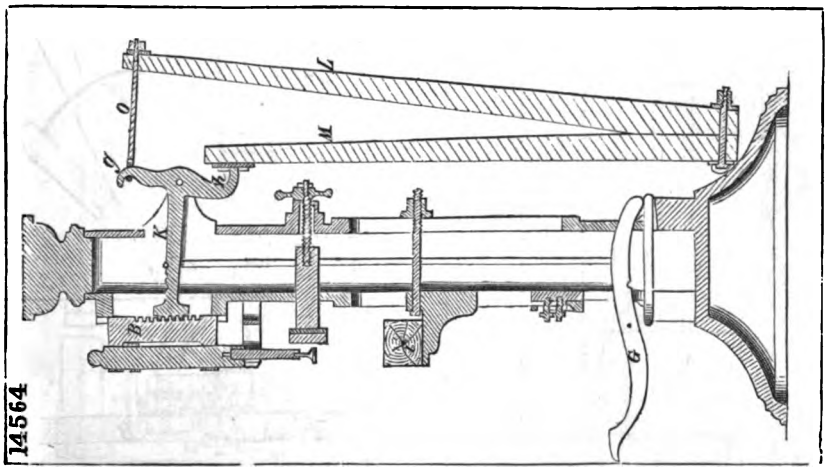

Digitized by Google

16197

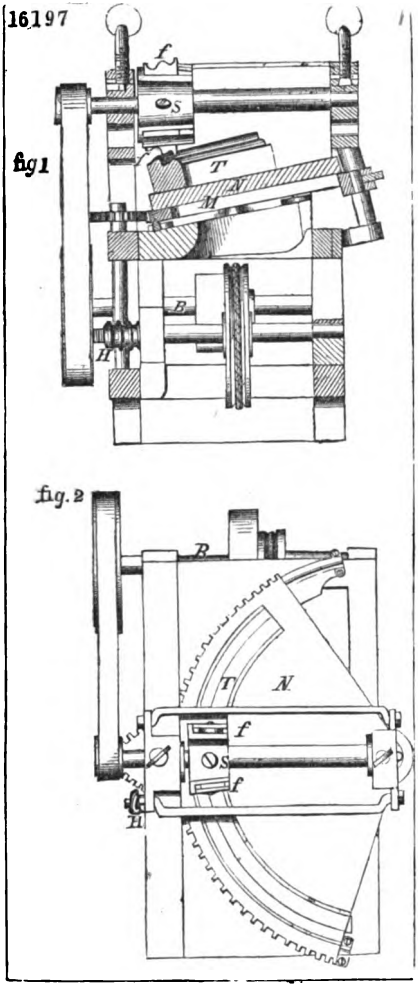

14454

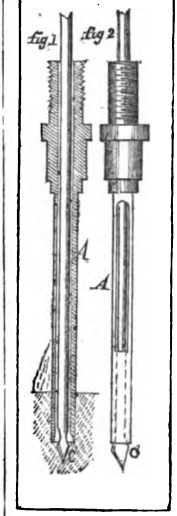

14302

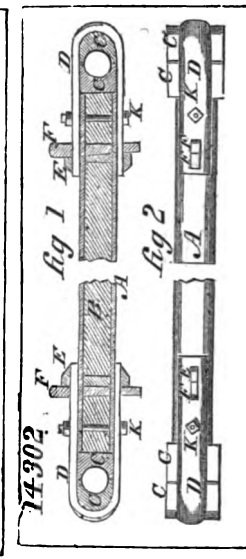

14436

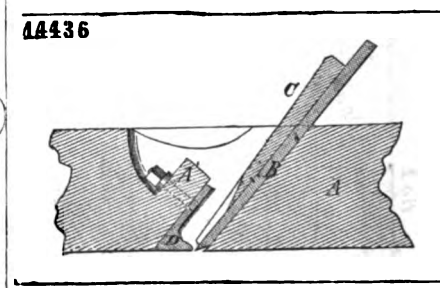

16168

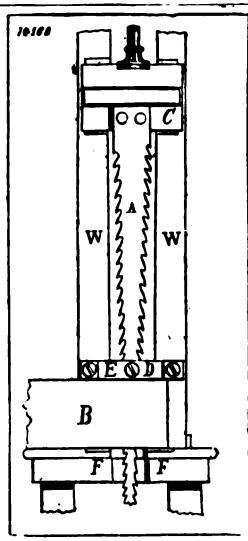

15467

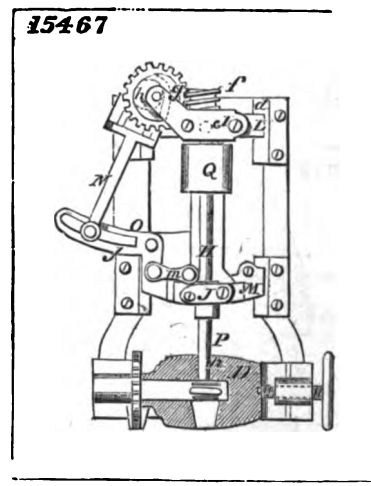

Digitized by Google

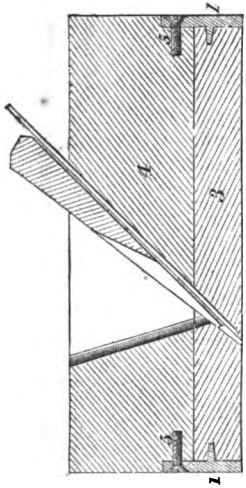

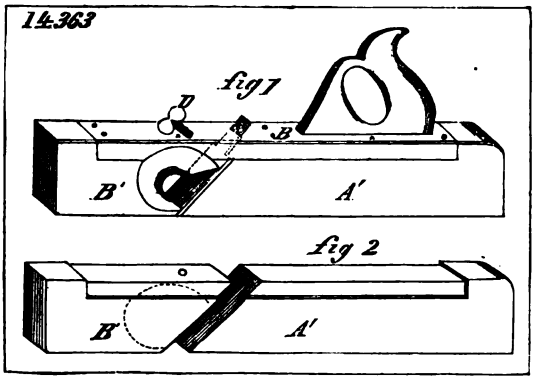

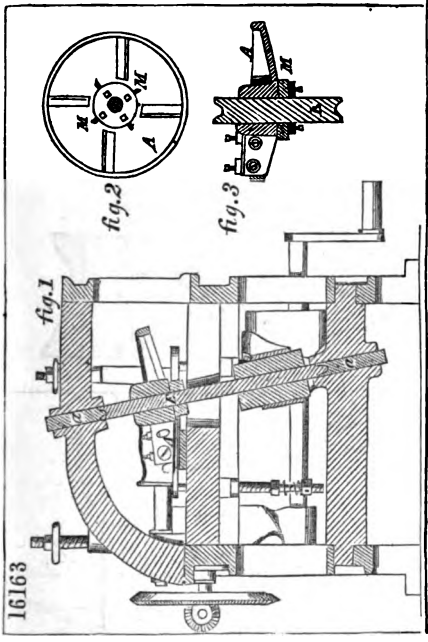

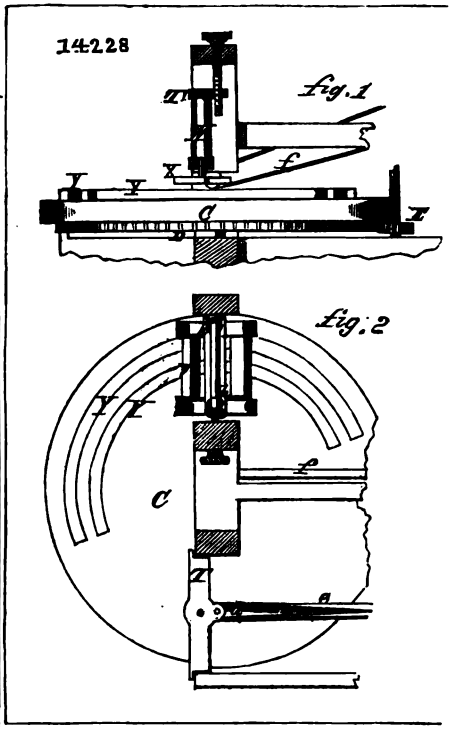

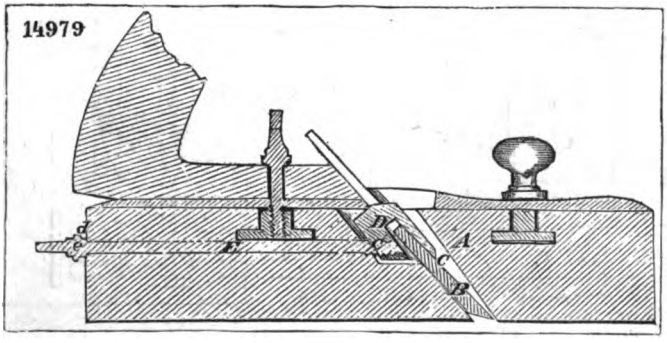

Digitized by Google

16144

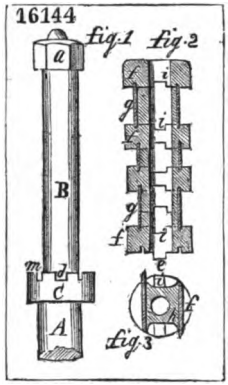

16309

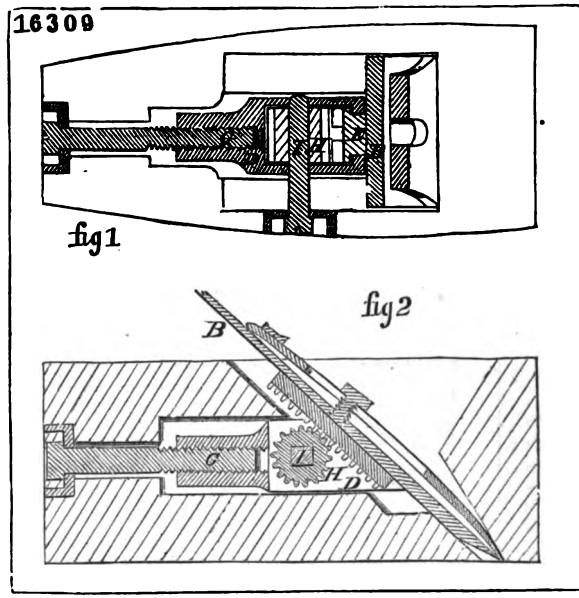

14887

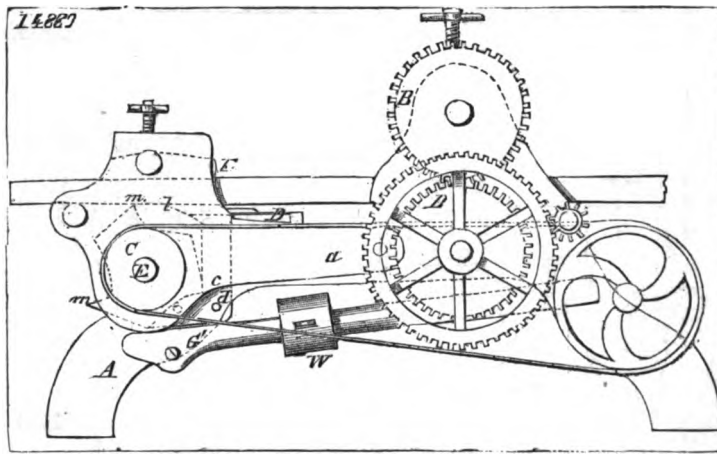

14038

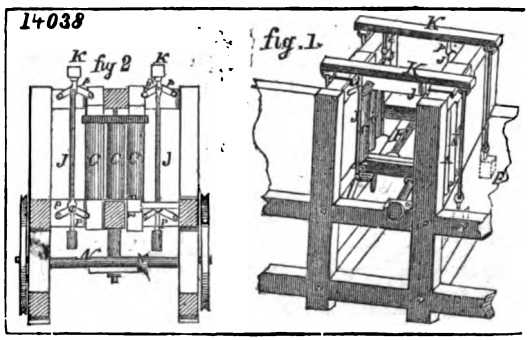

14455

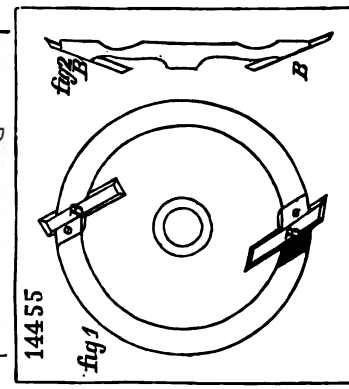

Digitized by Google

14604

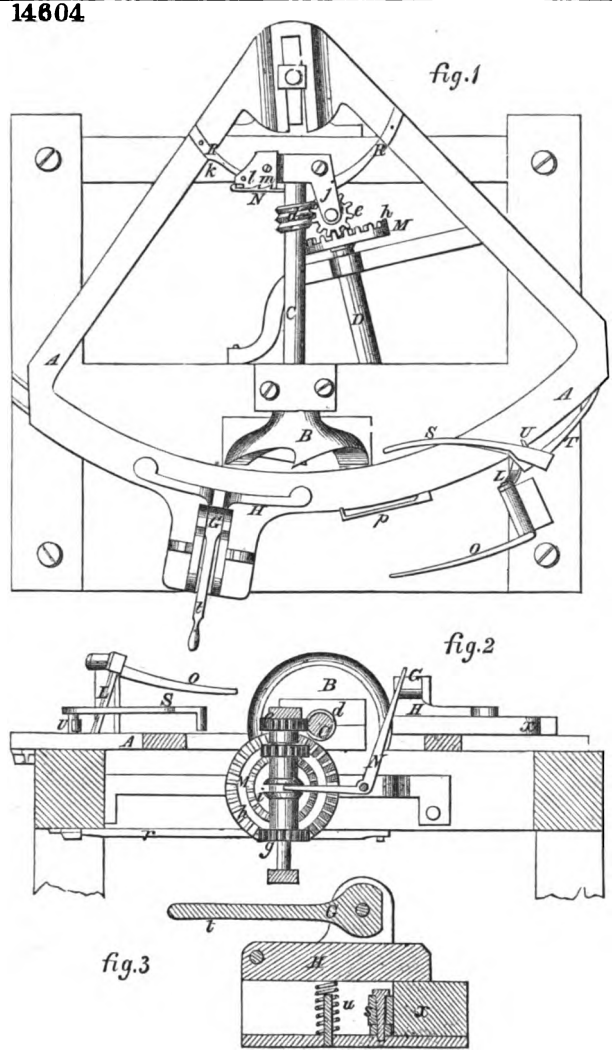

15385

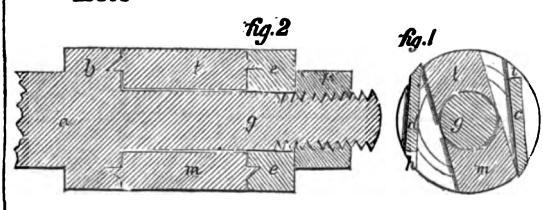

Digitized by Google

14363

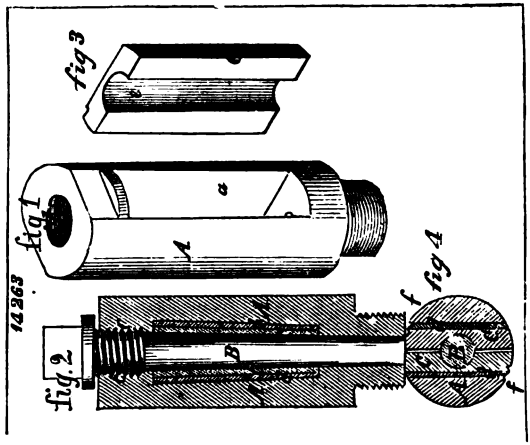

14272

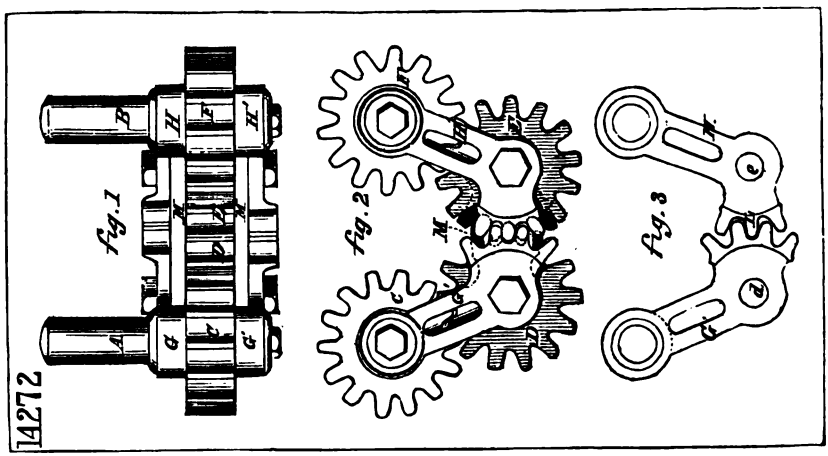

15403

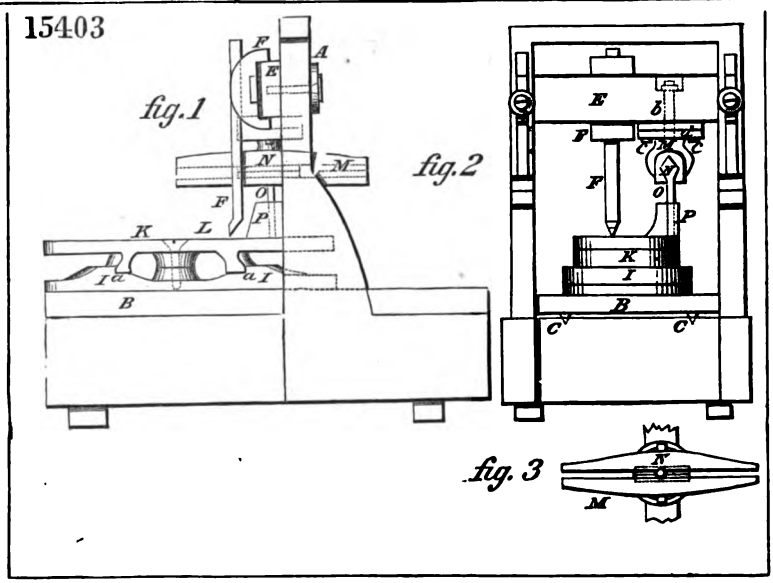

Digitized by Google

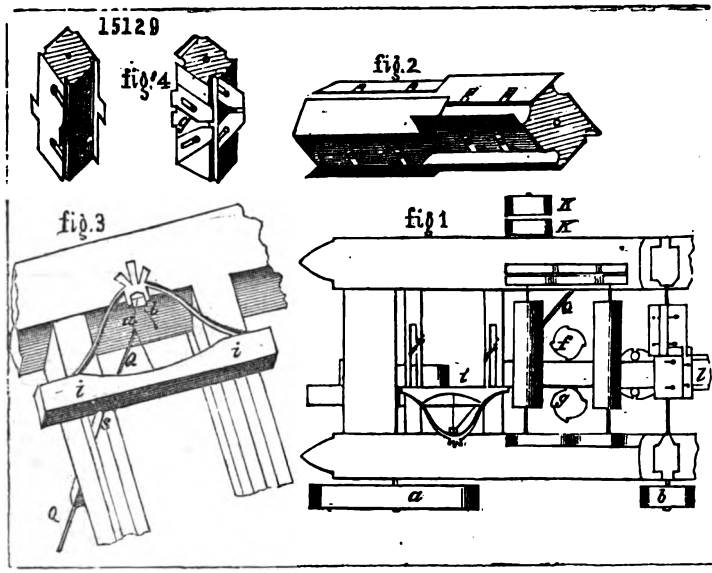

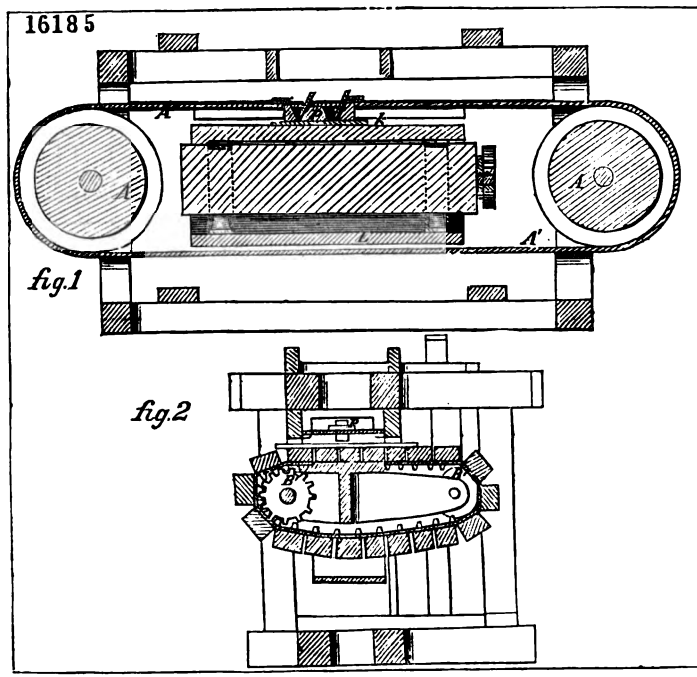

Digitized by Google

15600

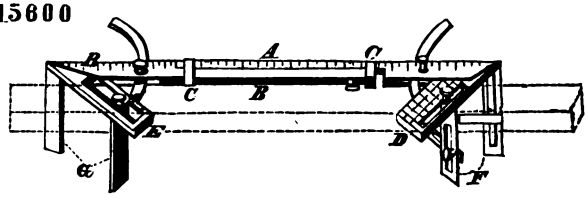

15163

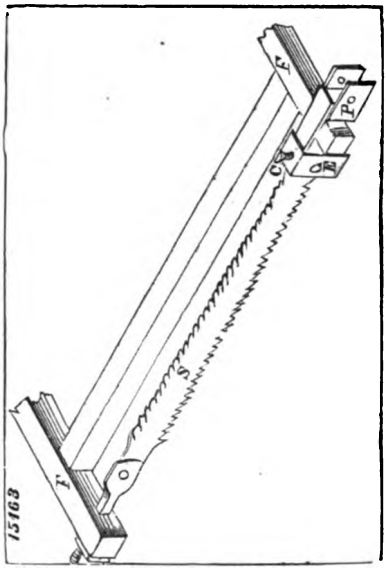

15398

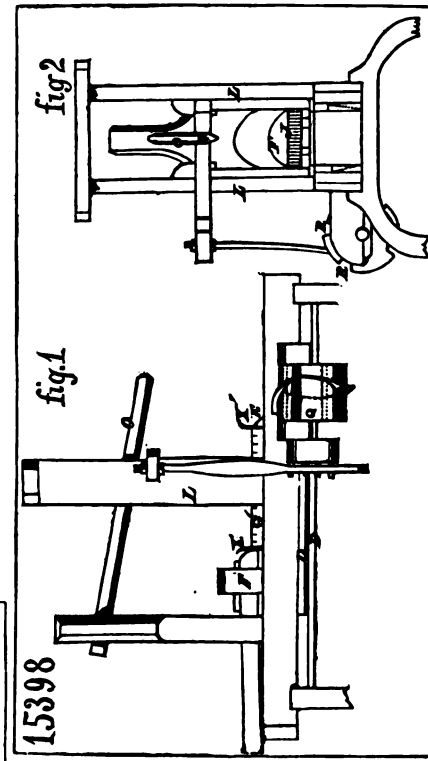

15382

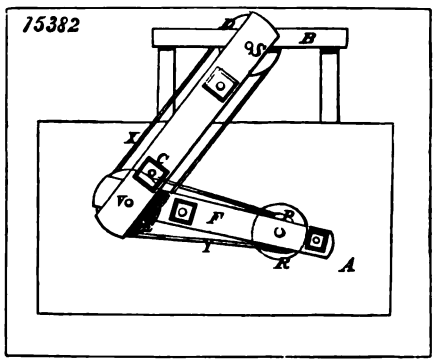

14130

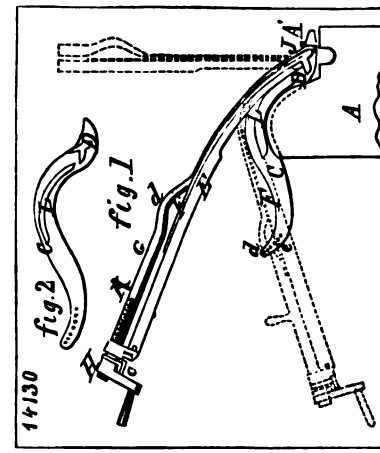

15718

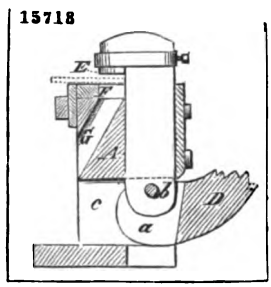

Digitized by Google

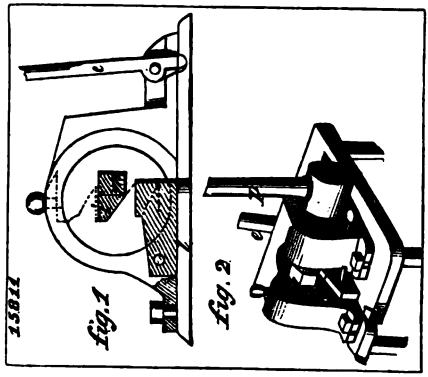

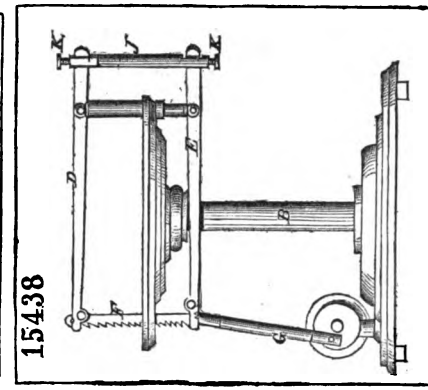

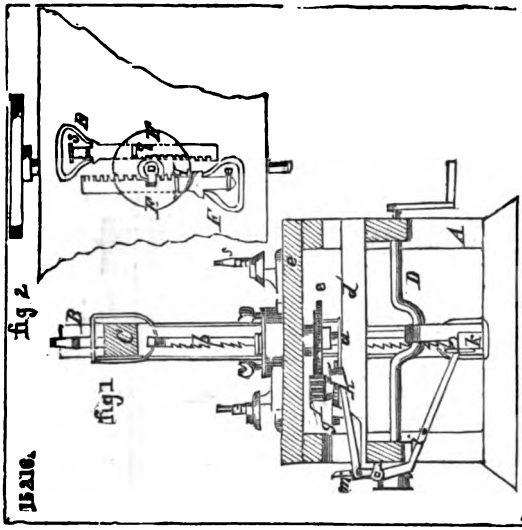

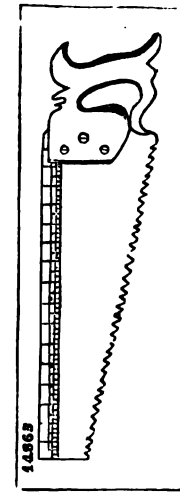

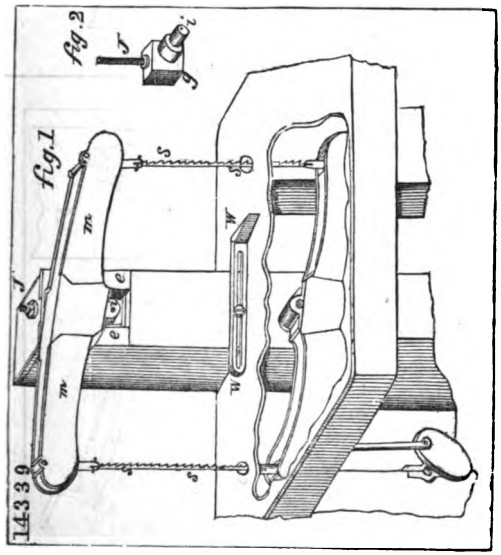

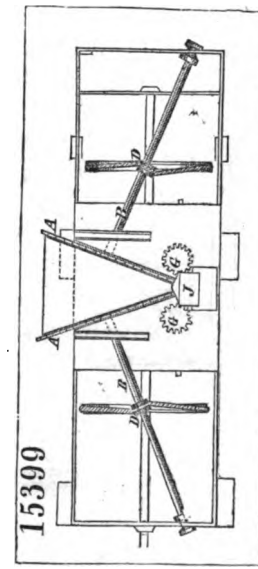

Digitized by Google

14757

fig 1

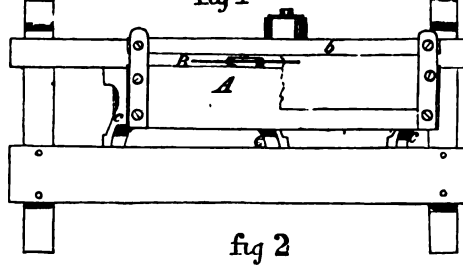

fig 2

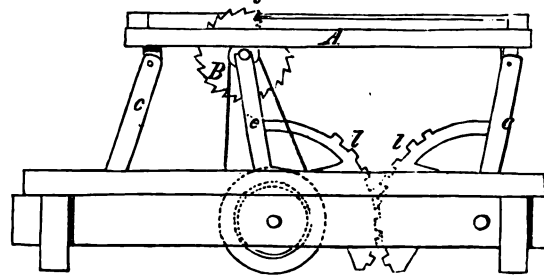

15012

fig 1

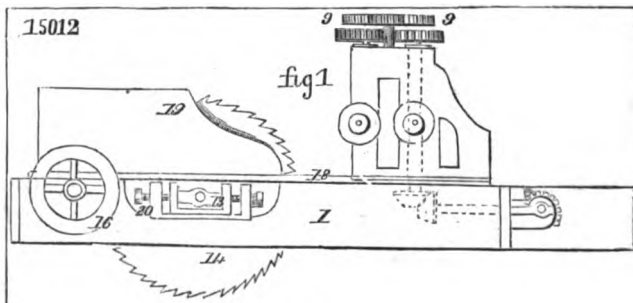

fig 2

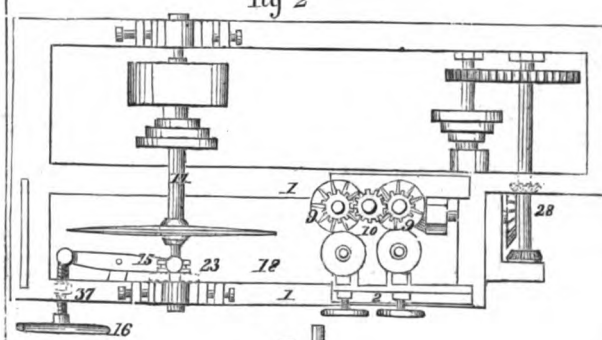

fig 3

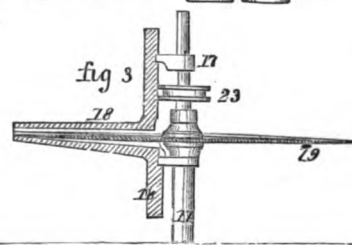

Digitized by Google

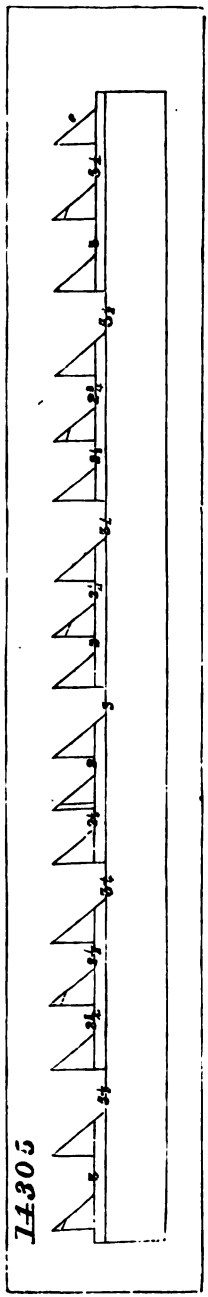

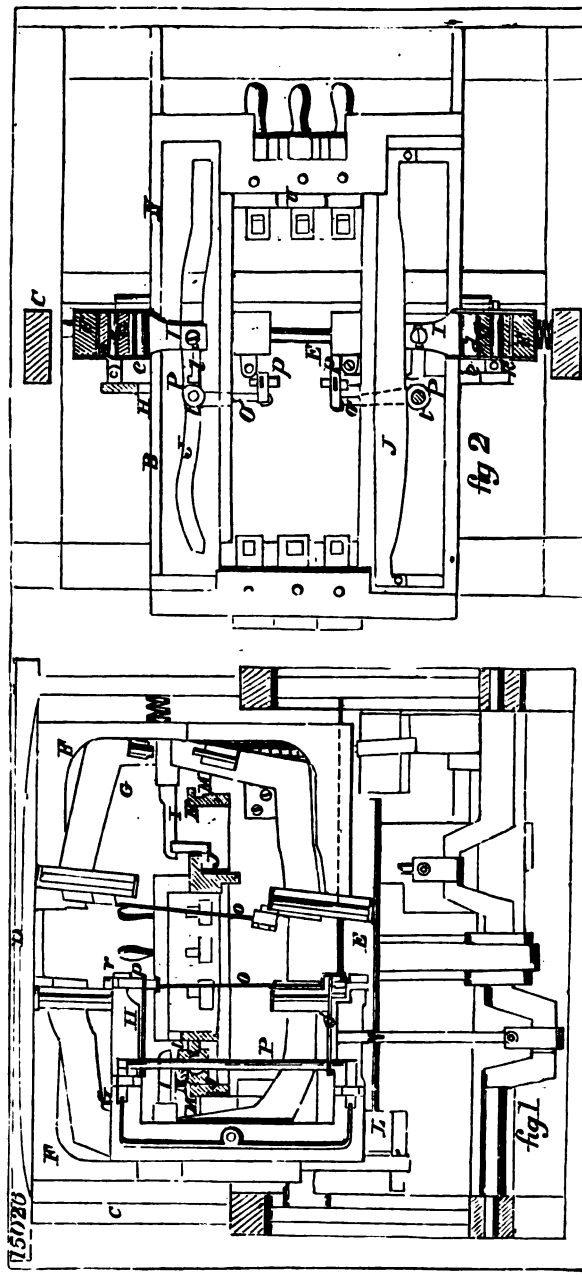

Digitized by Google

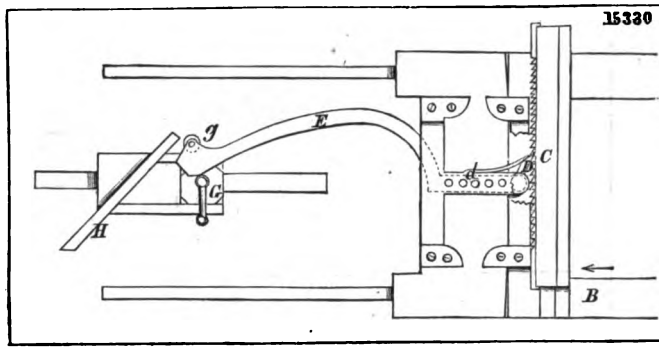

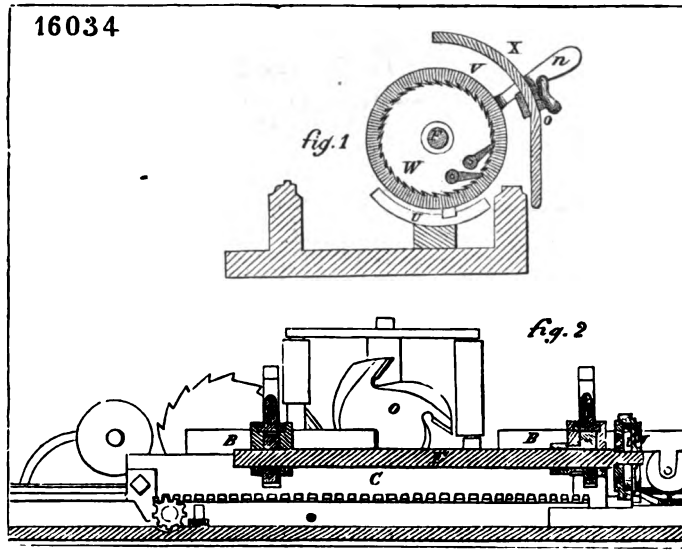

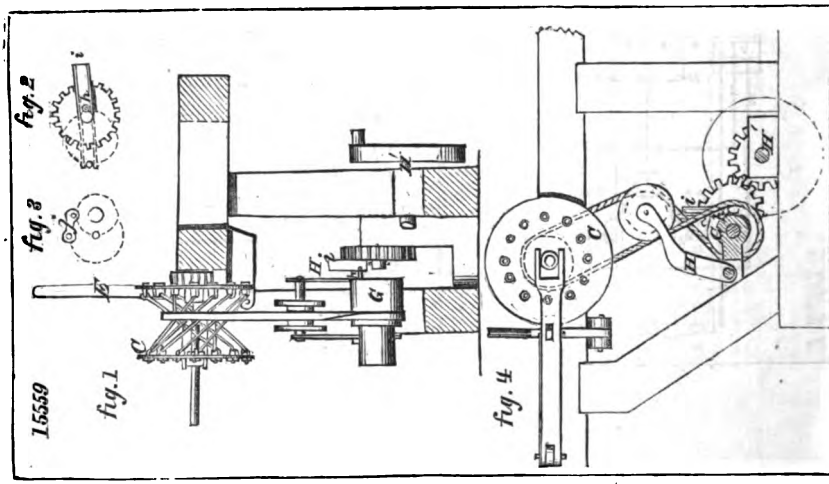

Digitized by Google

15078.

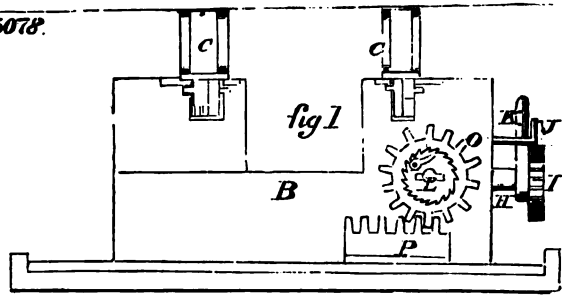

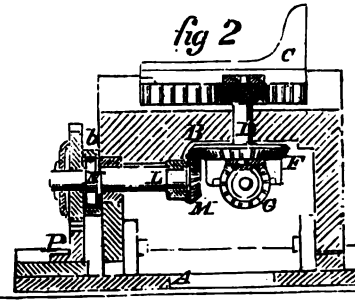

15414

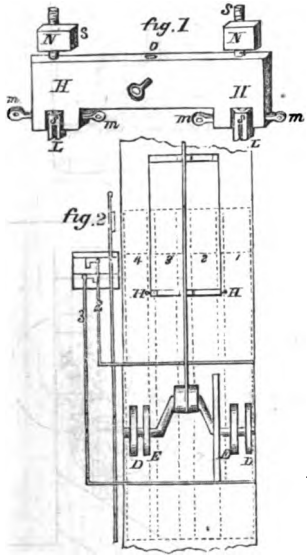

15790

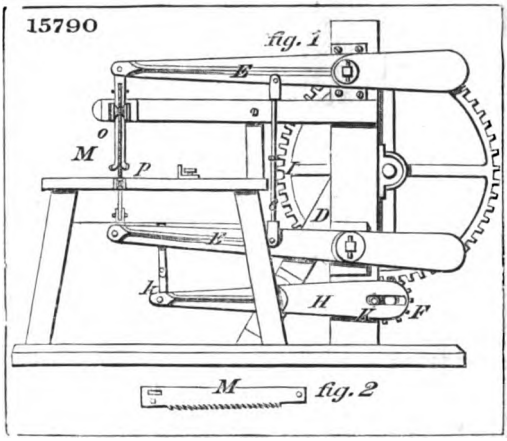

15689

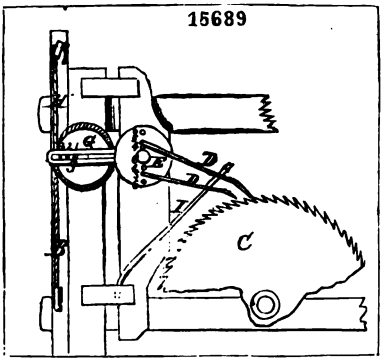

Digitized by Google

14909

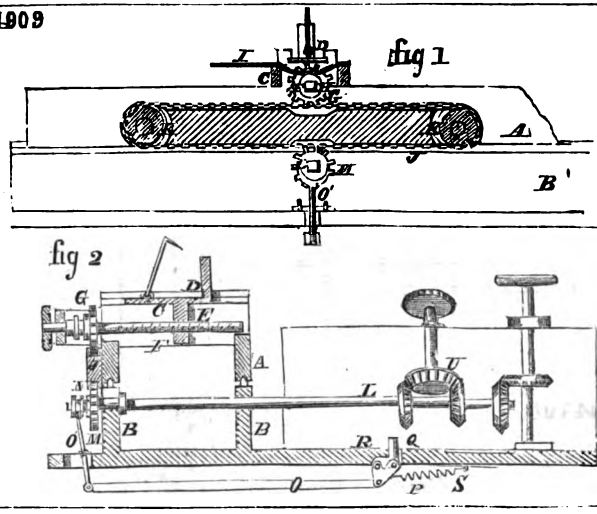

14206

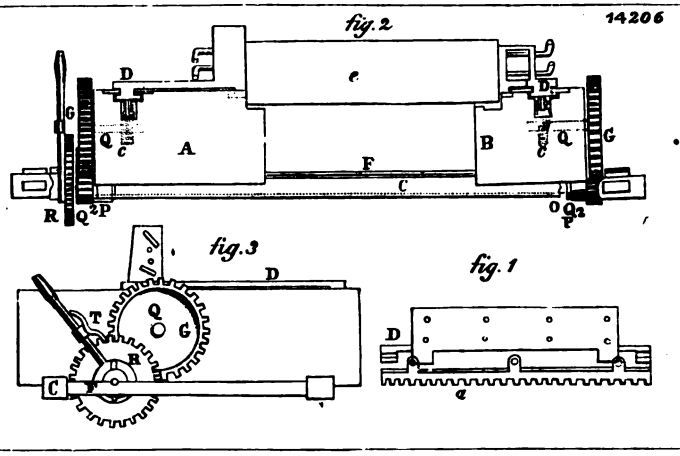

14844

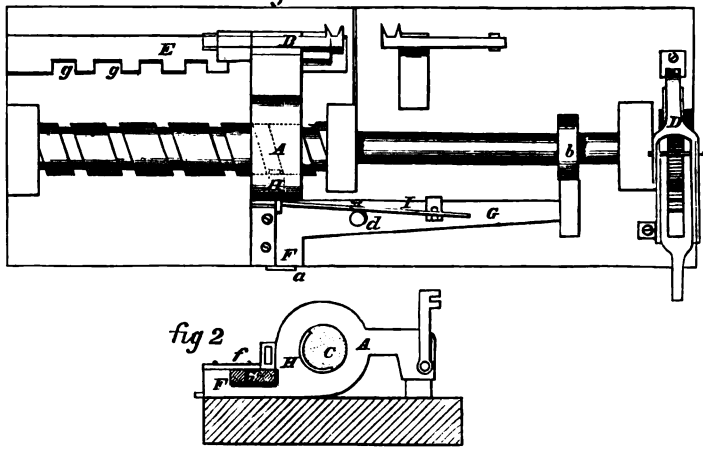

Digitized by Google

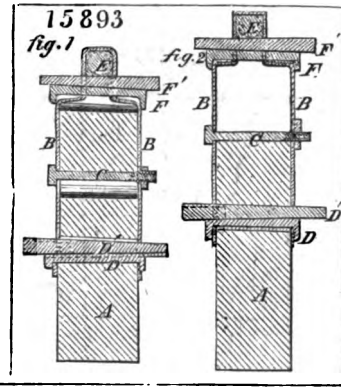

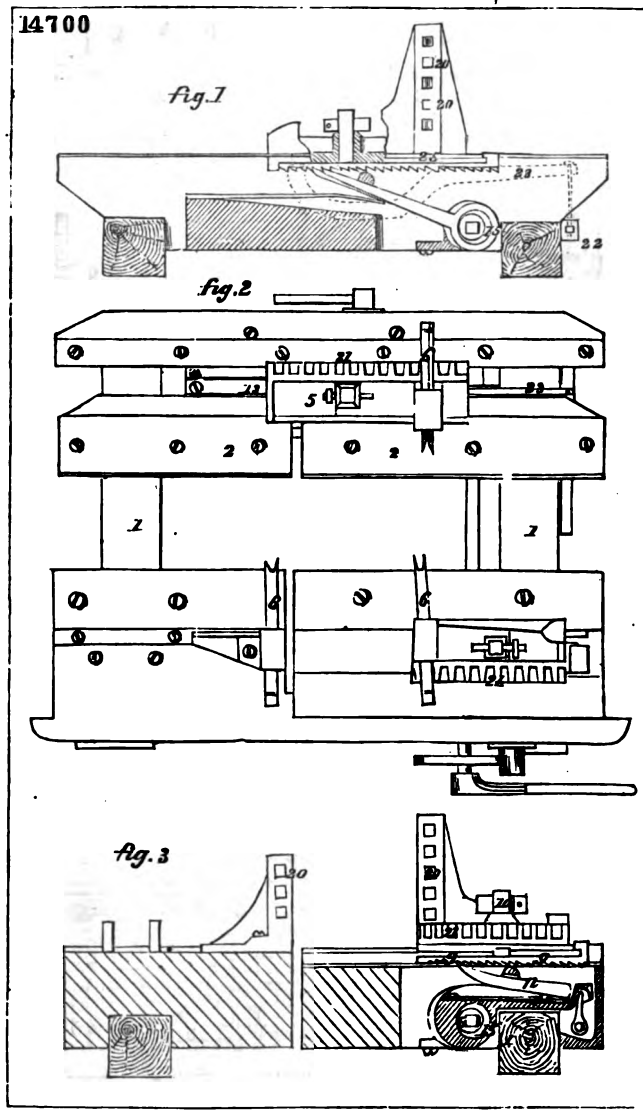

Digitized by Google

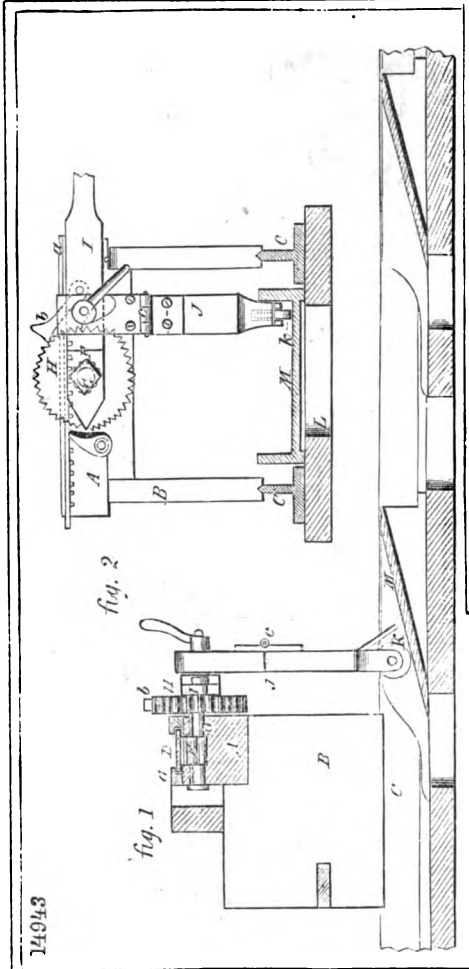

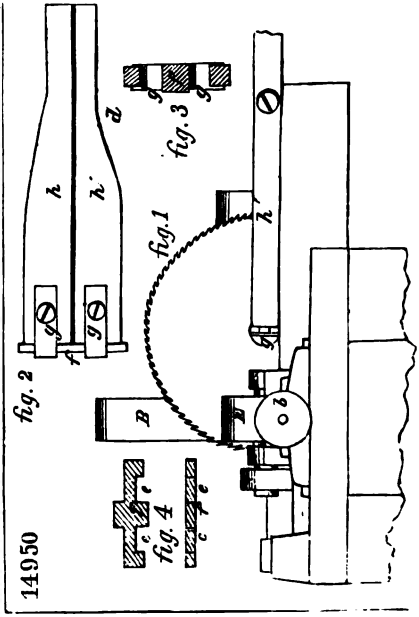

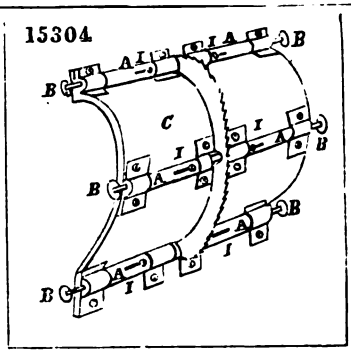

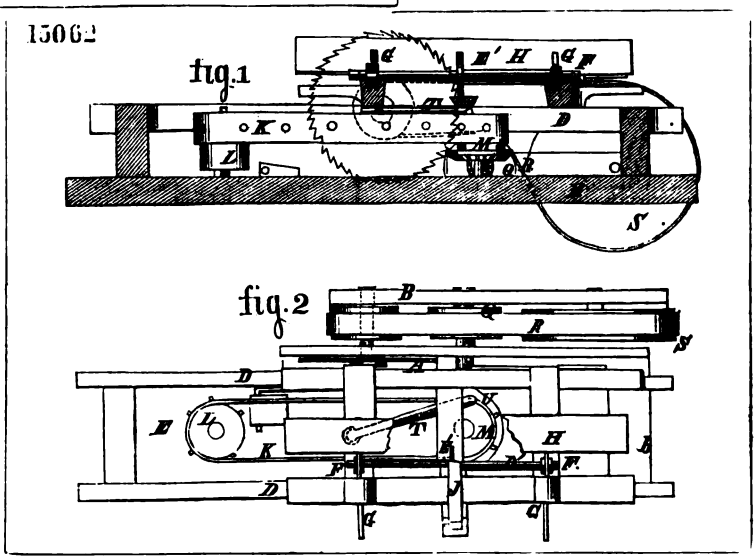

Digitized by Google

14957

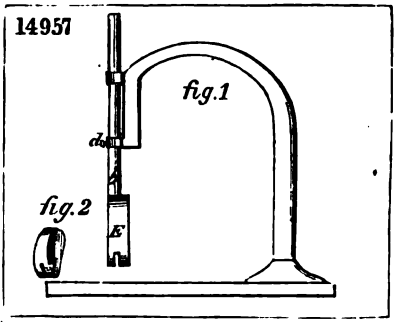

14172

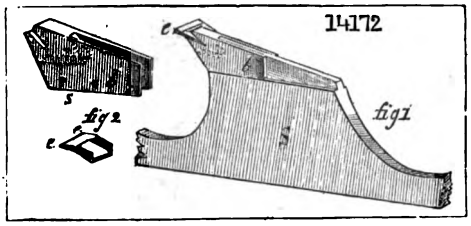

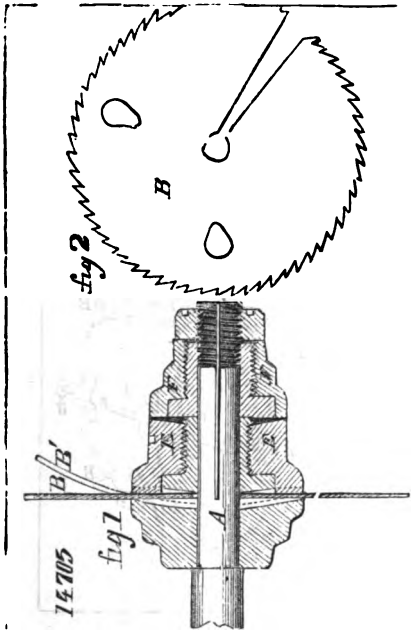

14705

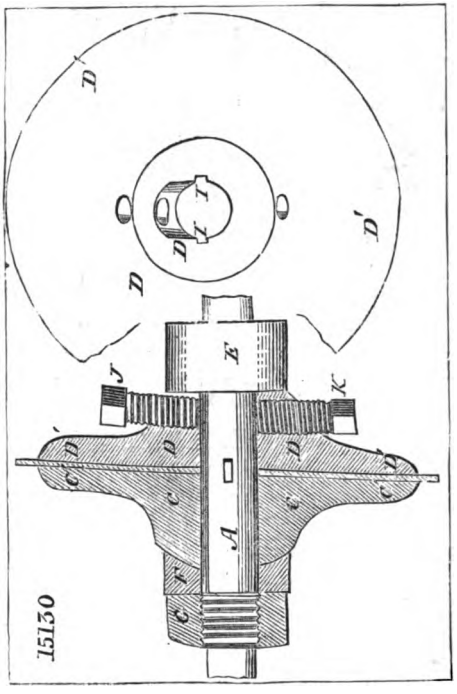

15130

14379

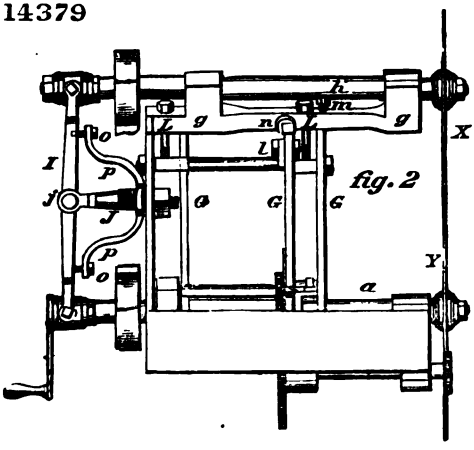

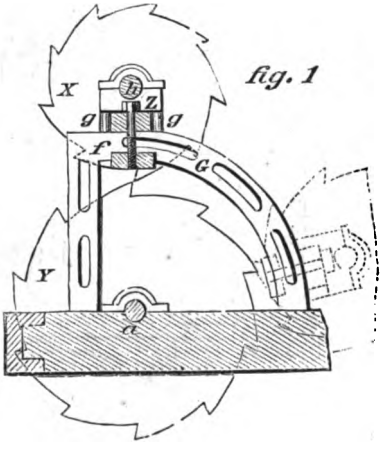

Digitized by Google

15600

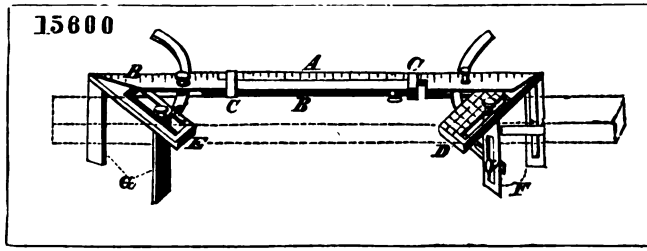

15163

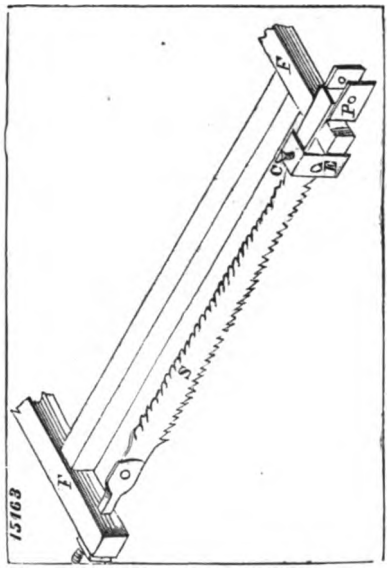

15398

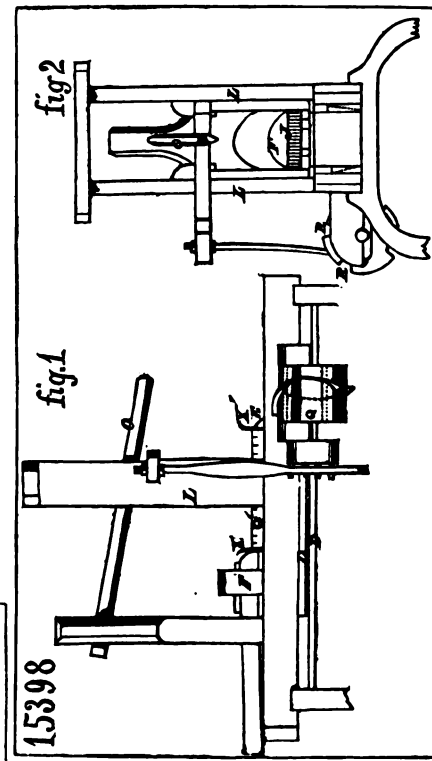

15382

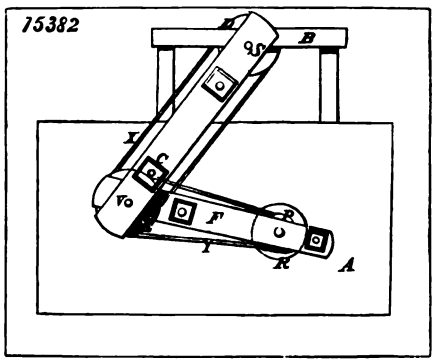

14130

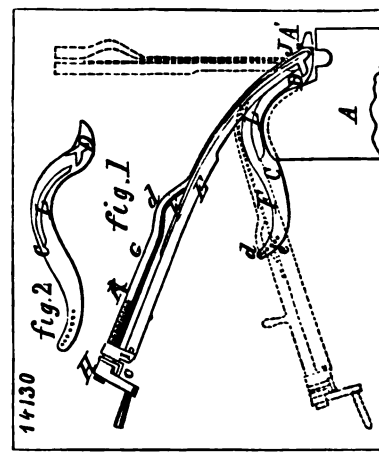

15718

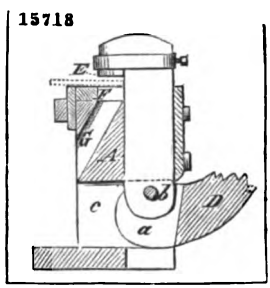

Digitized by Google

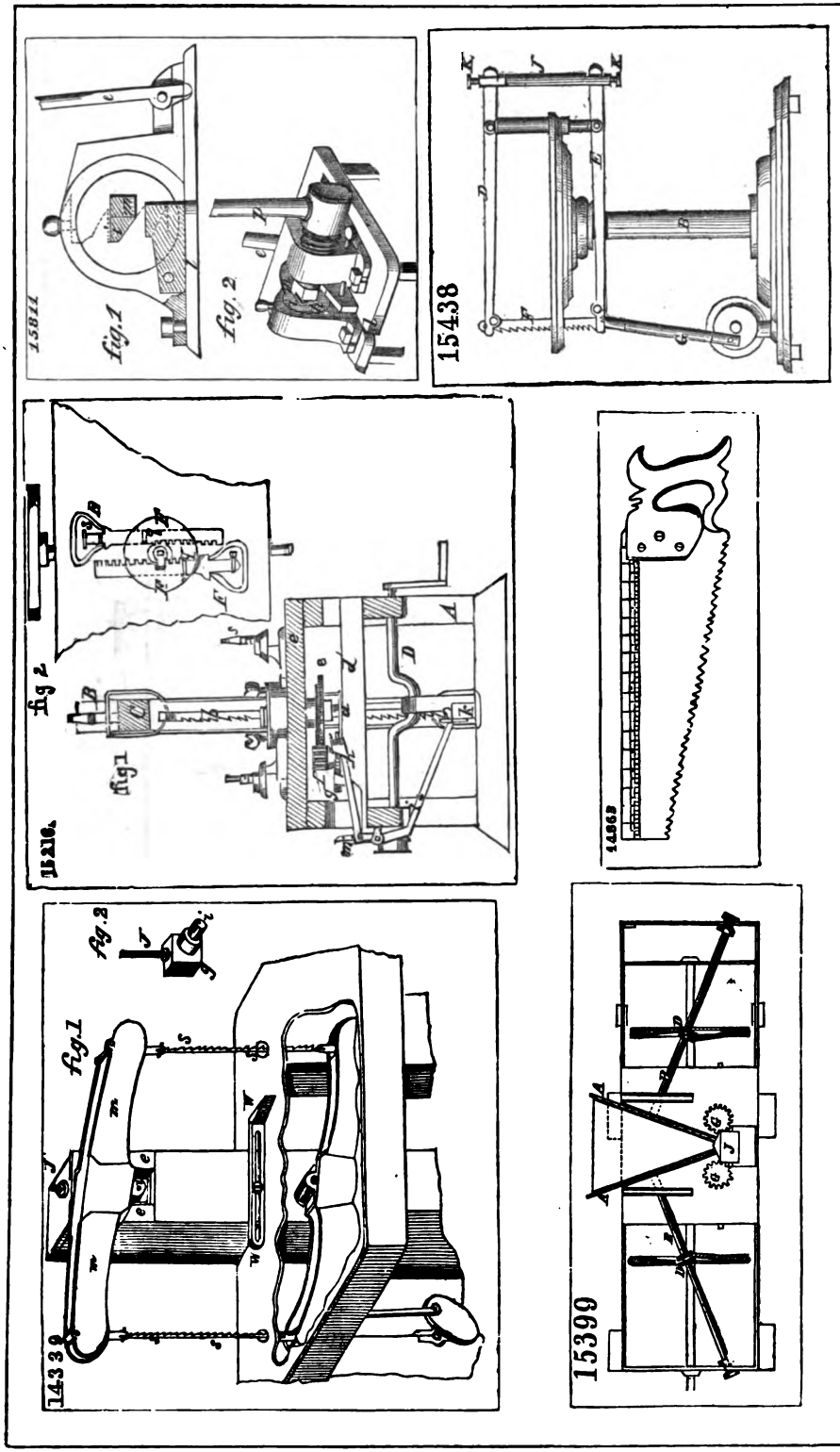
15811
fig. 1
fig. 2
15438
15216.
fig 1
fig 2
14362
14339
fig. 1
fig. 2
15399

14757

fig 1

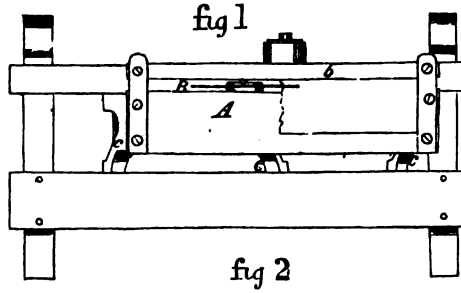

fig 2

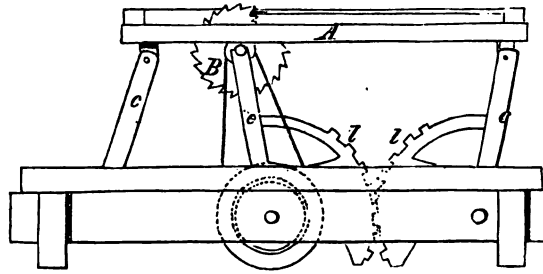

15012

fig 1

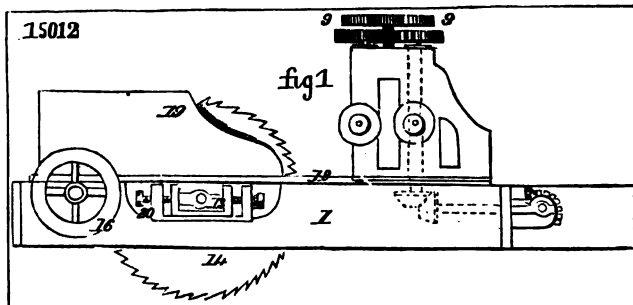

fig 2

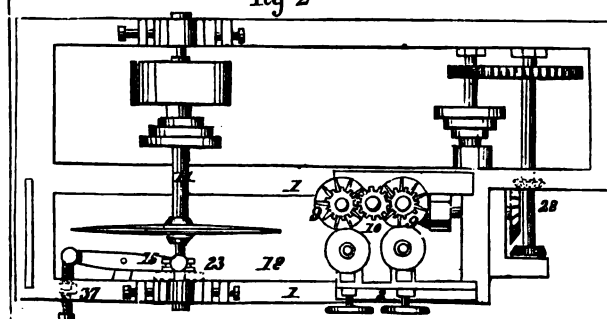

fig 3

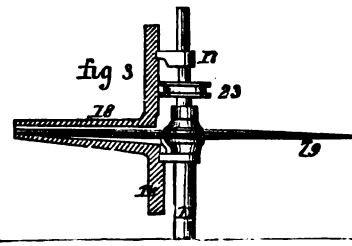

Digitized by Google

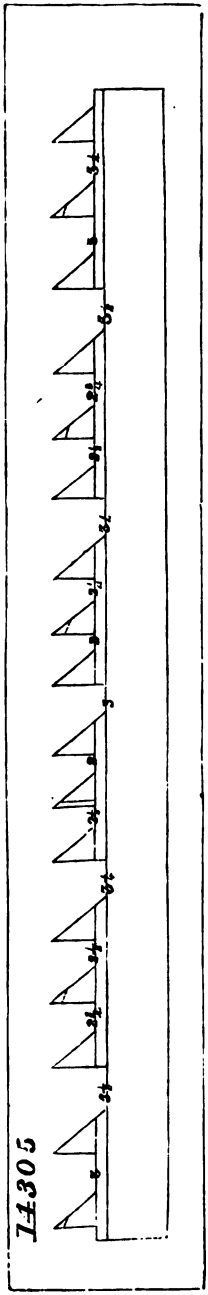

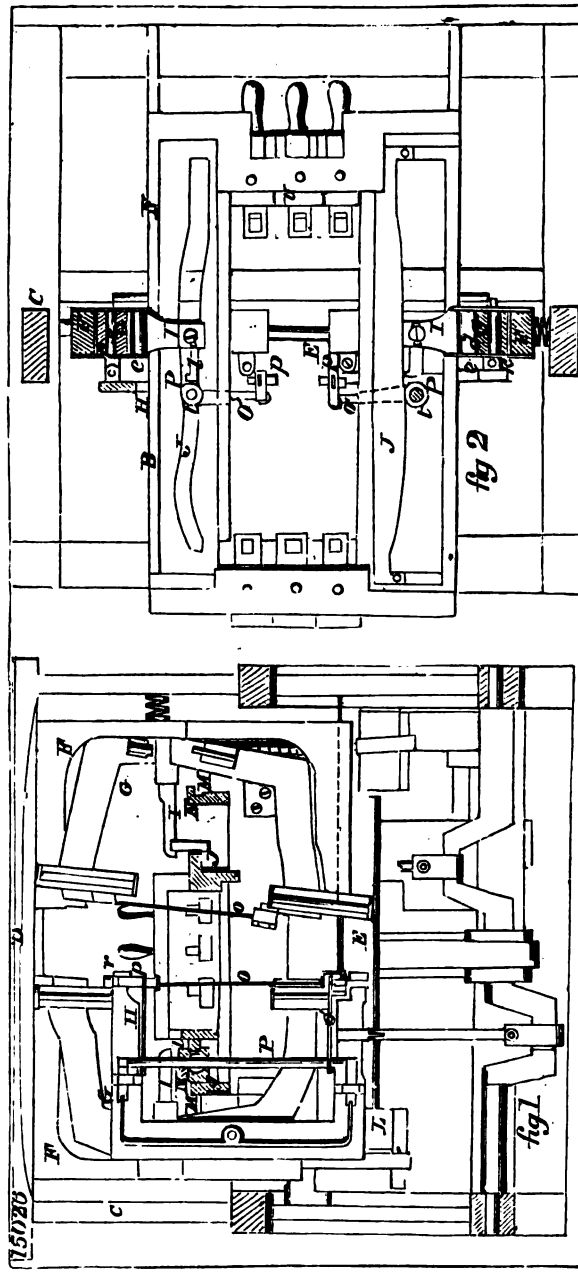

Digitized by Google

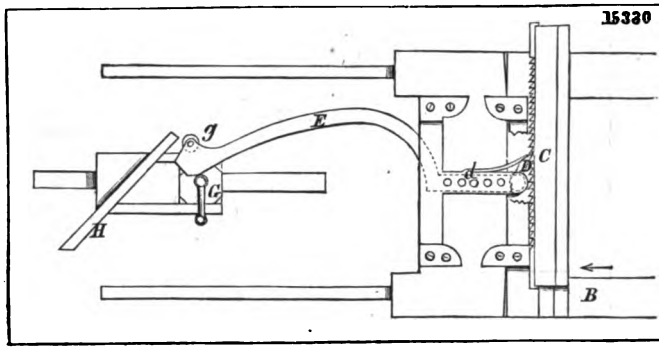

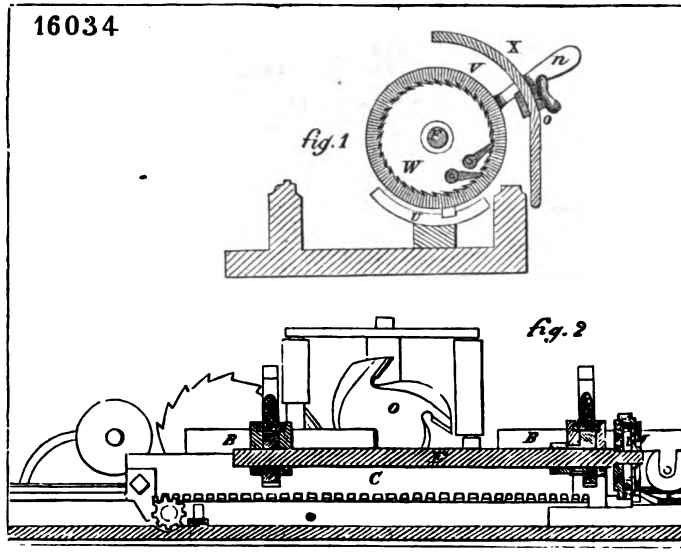

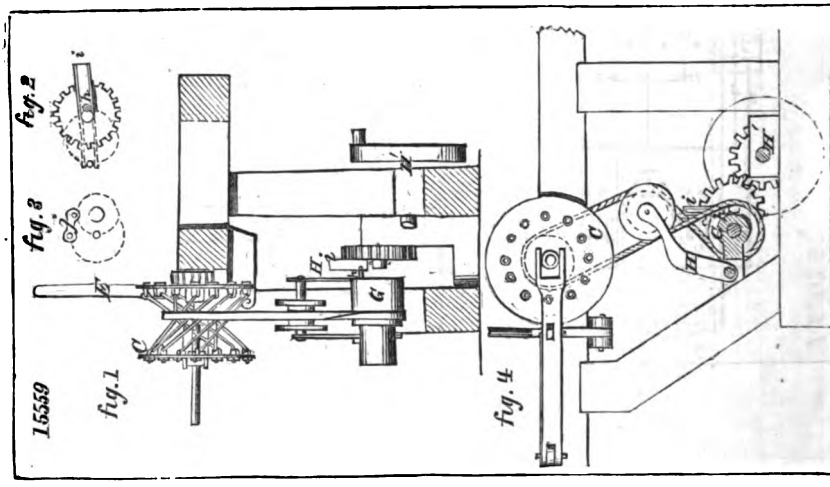

Digitized by Google

15078.

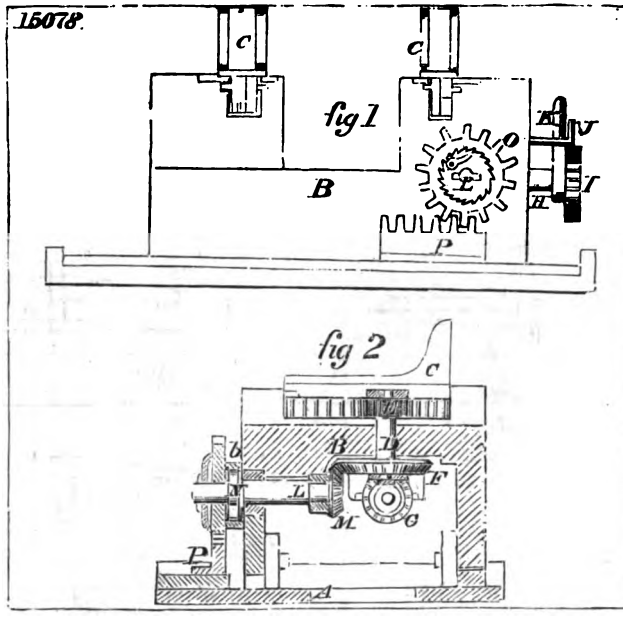

15414

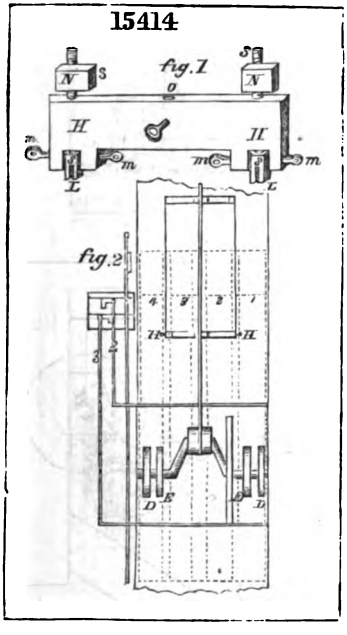

15790

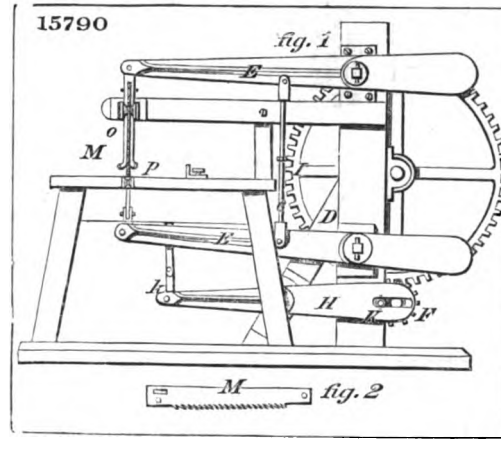

15689

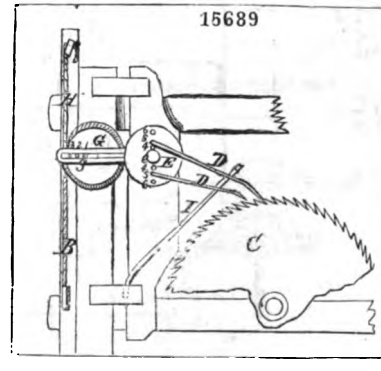

Digitized by Google

14909

fig 1

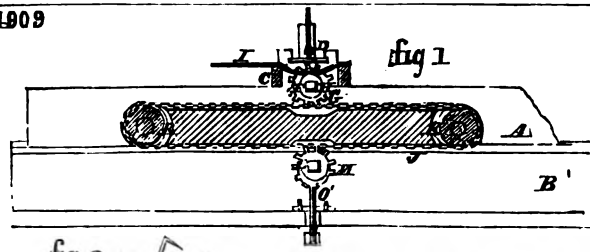

fig 2

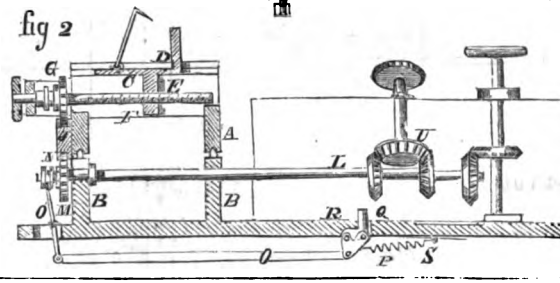

14206

fig. 2

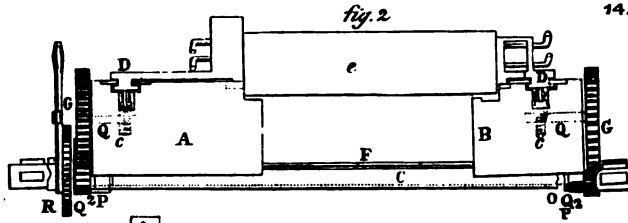

fig. 3

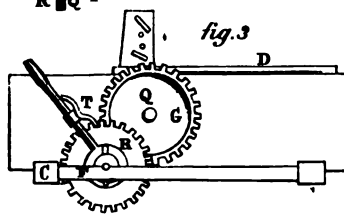

fig. 1

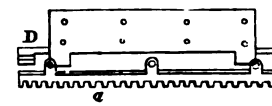

14844

fig. 1

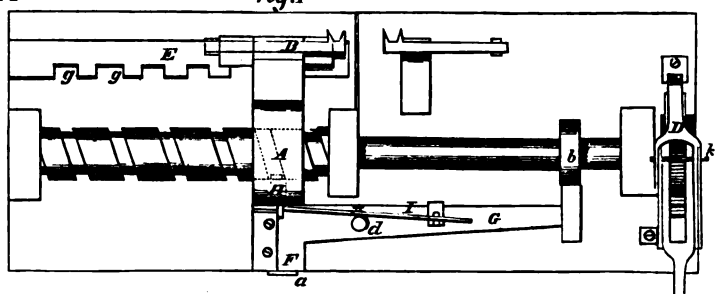

fig 2

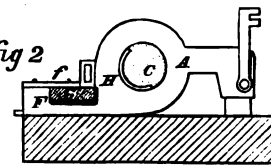

Digitized by Google

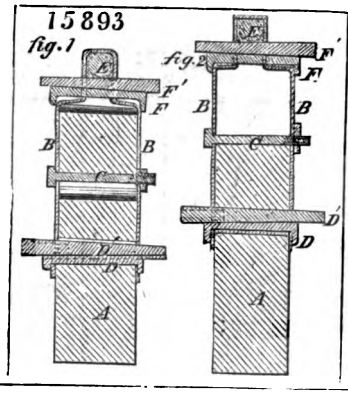

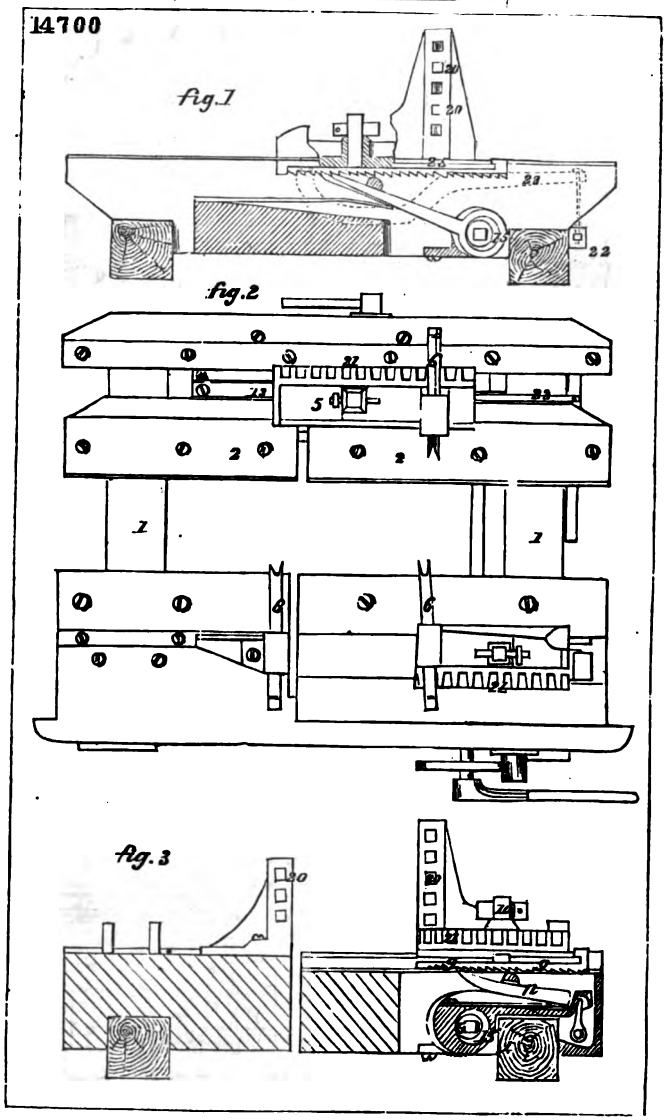

Digitized by Google

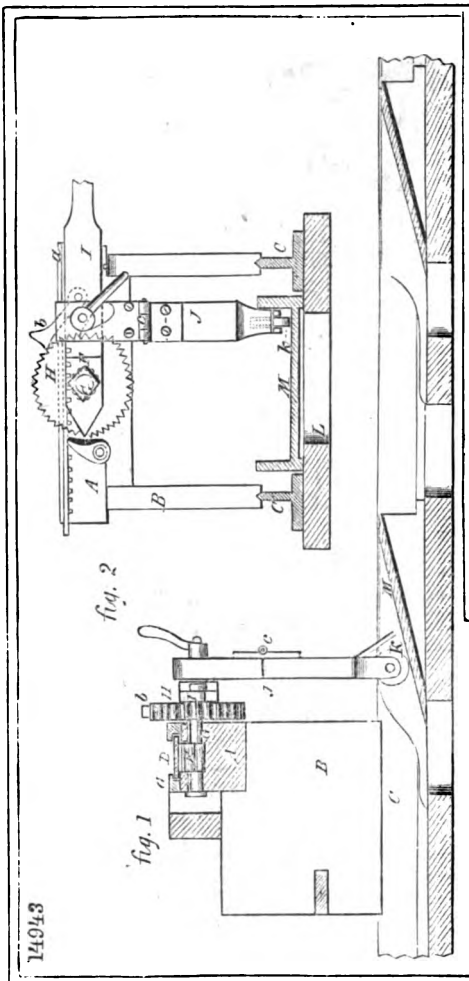

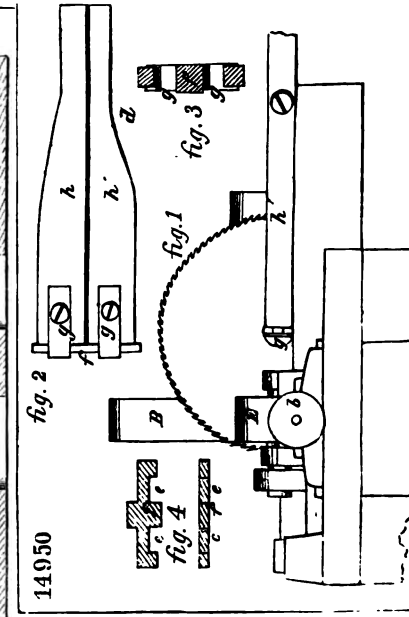

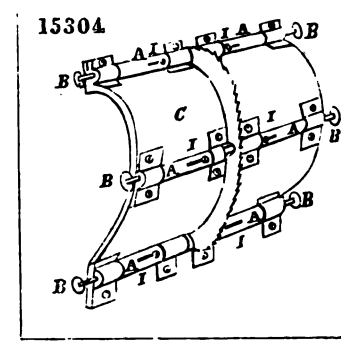

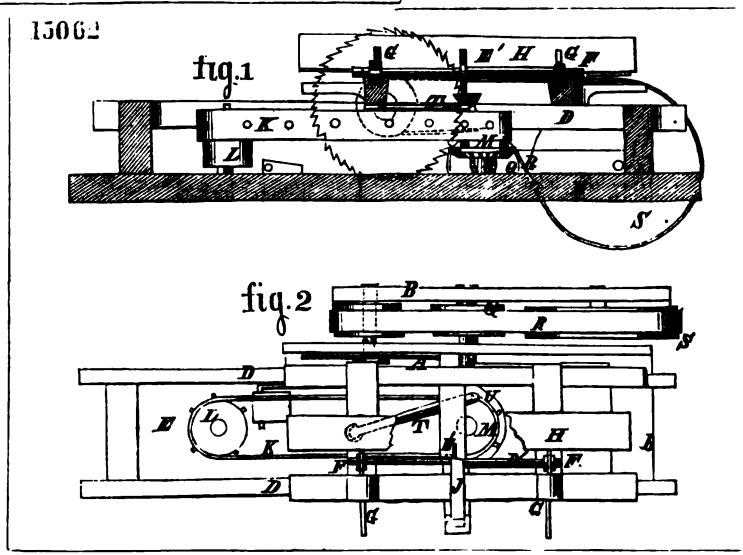

Digitized by Google

14957

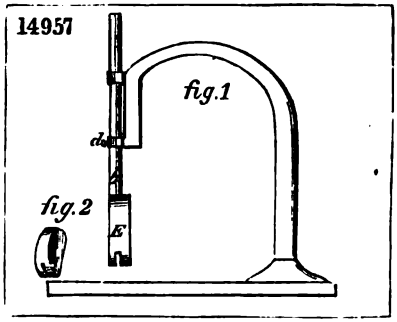

14172

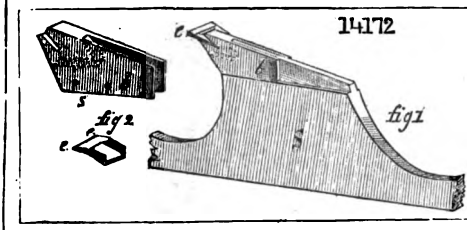

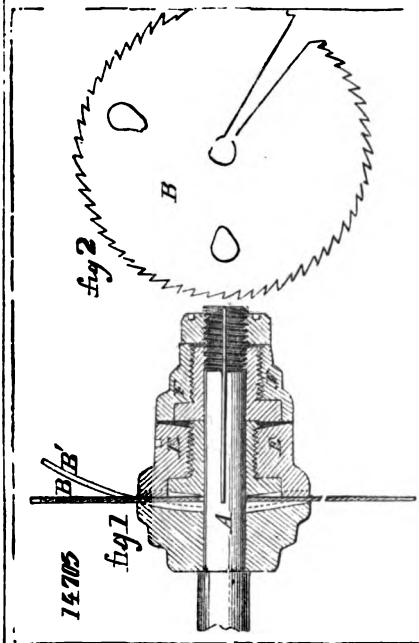

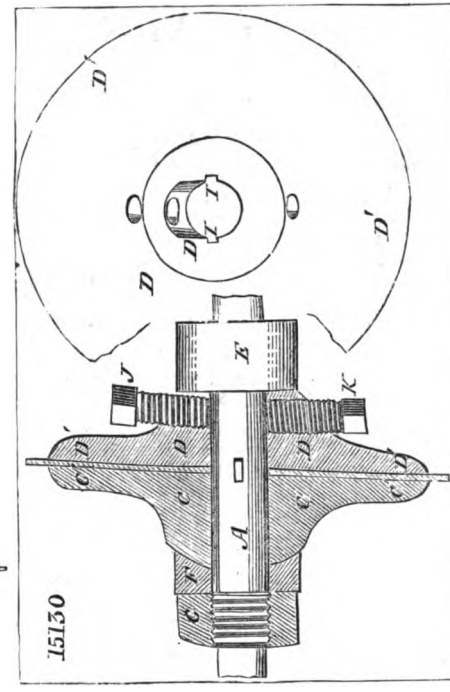

14379

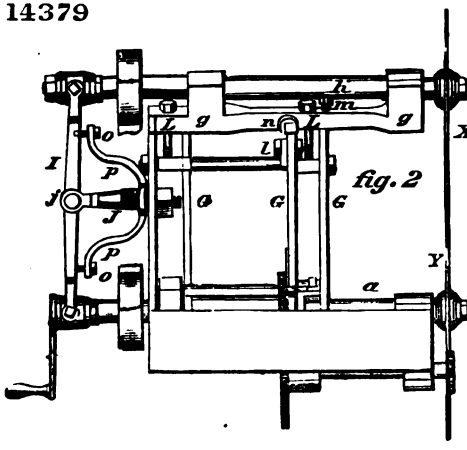

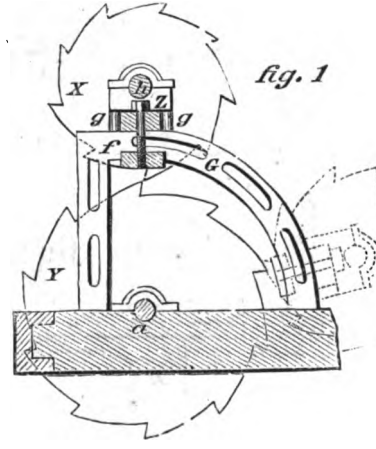

Digitized by Google

14188

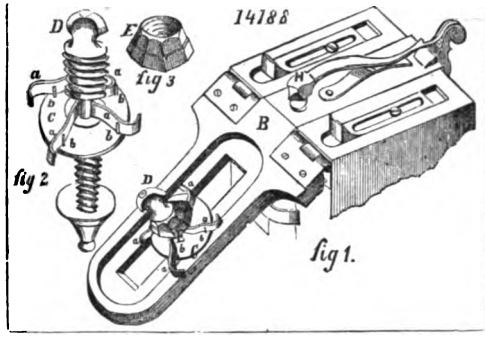

15368

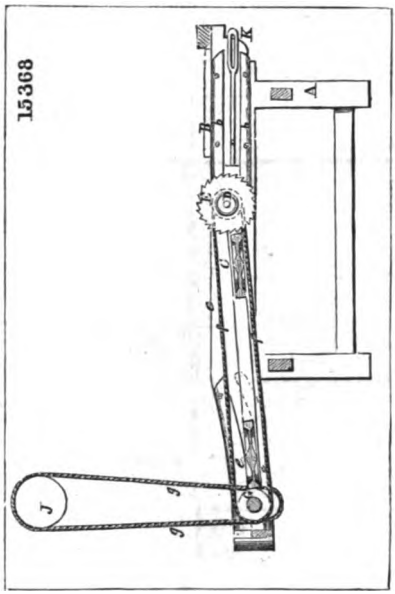

14036

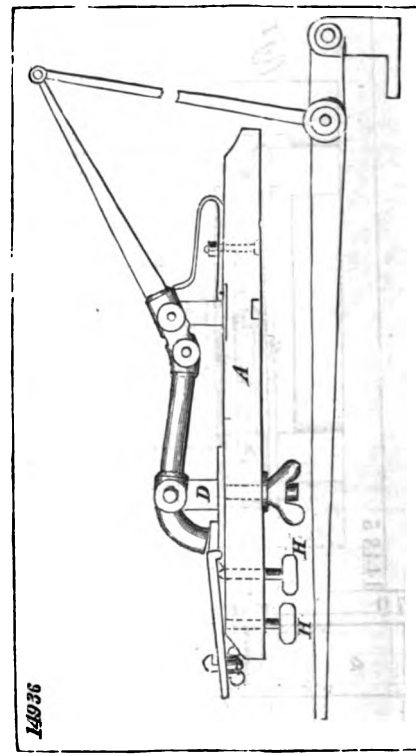

14241

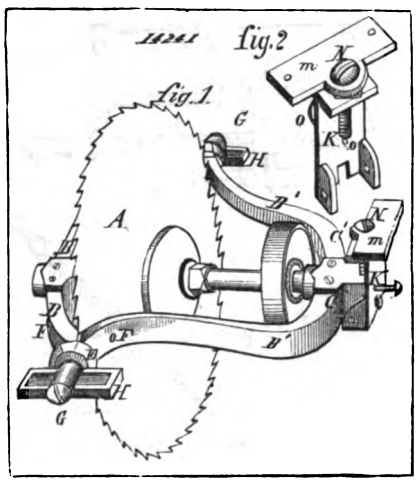

14268

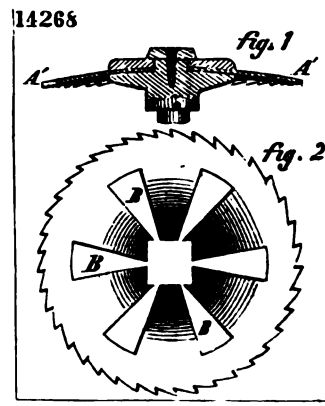

Digitized by Google

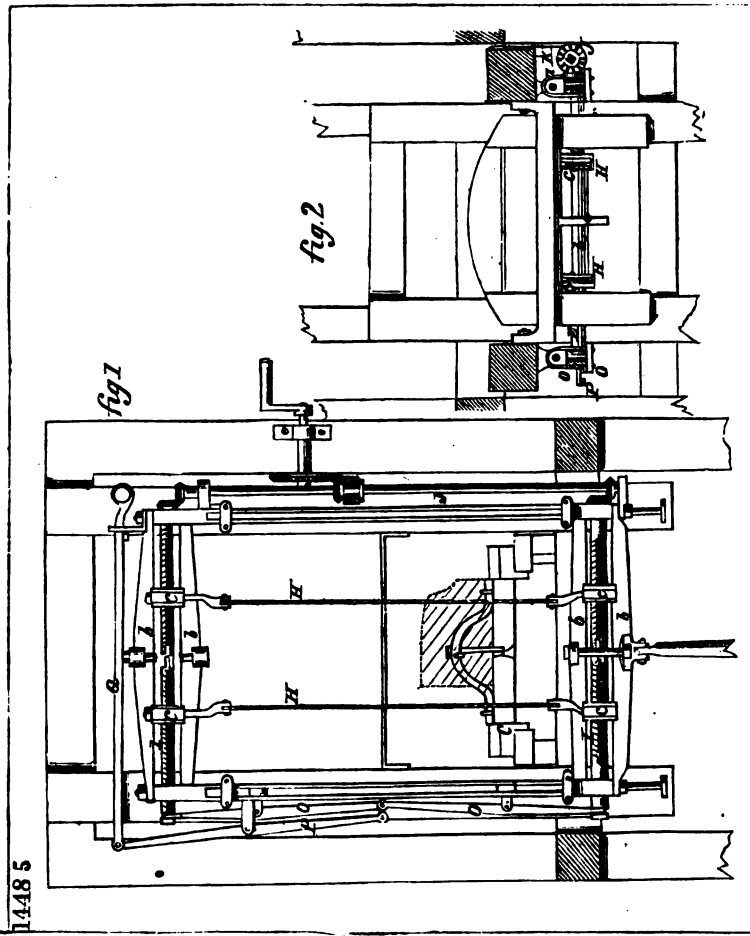

15679

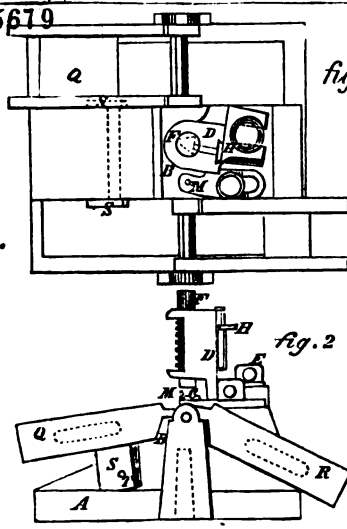

15940

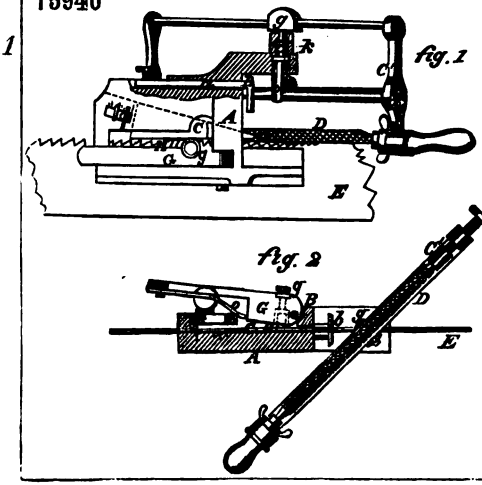

Digitized by Google

14413

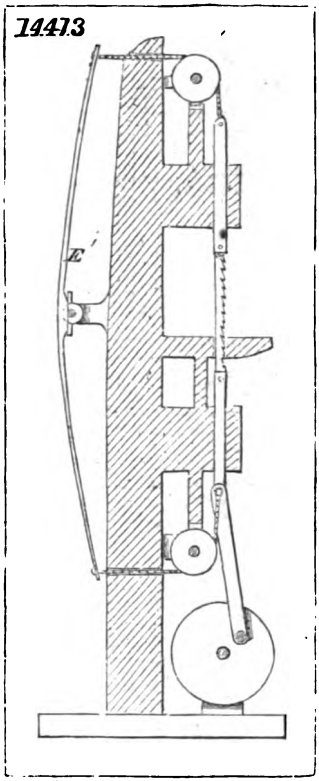

14055

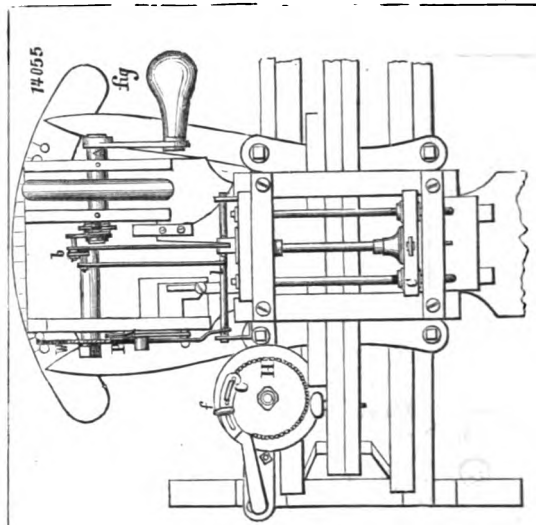

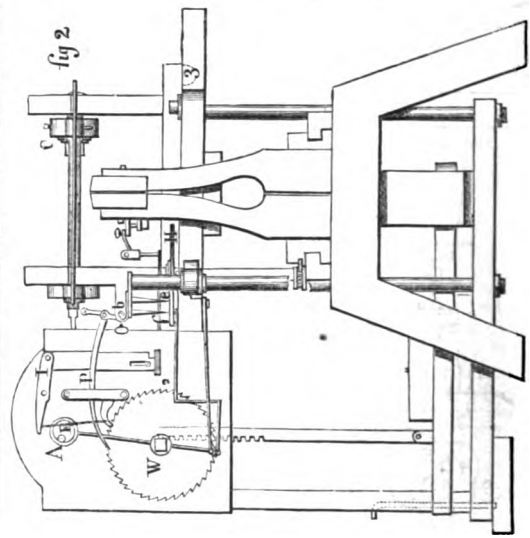

15731

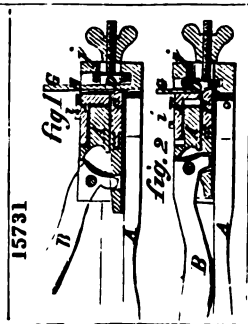

15007

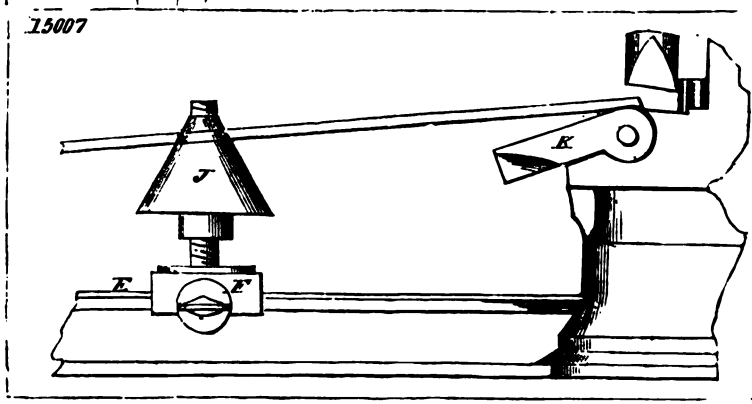

Digitized by Google

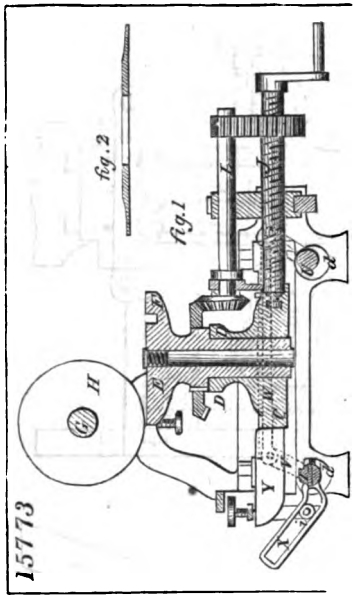

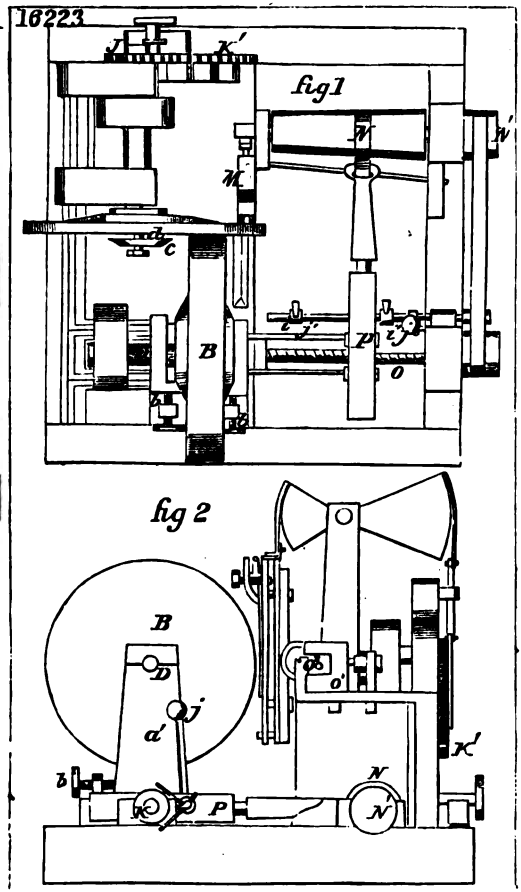

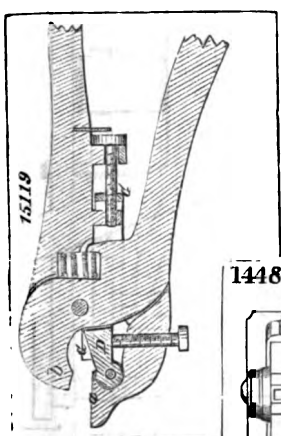

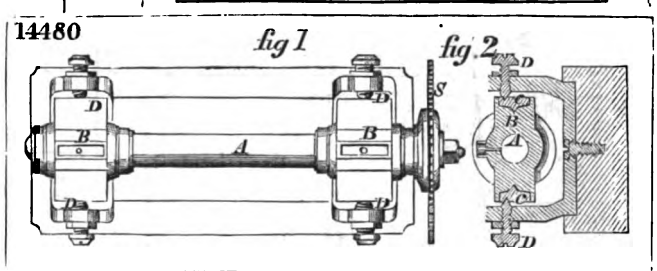

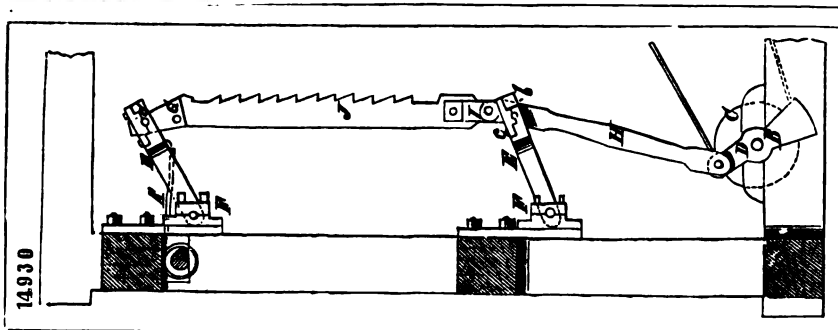

Digitized by Google

16295

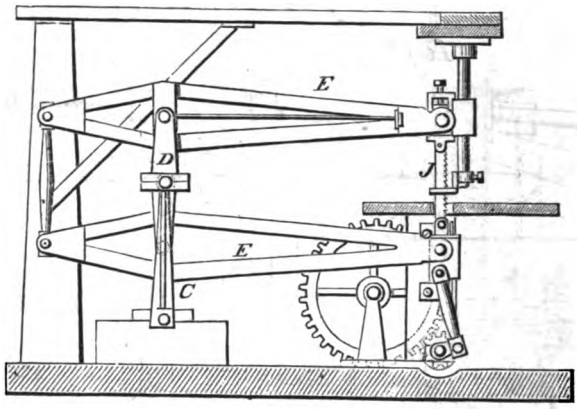

15220

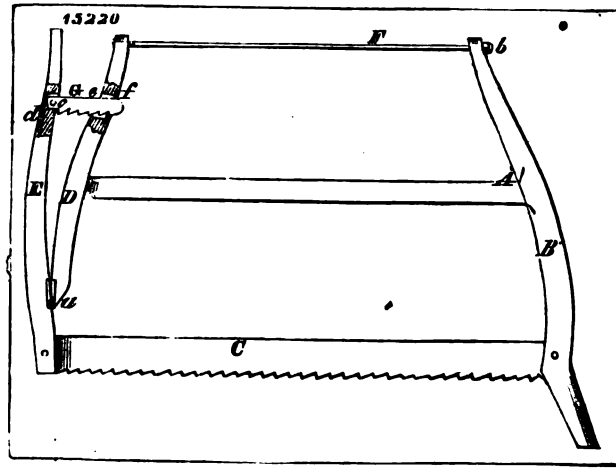

15082

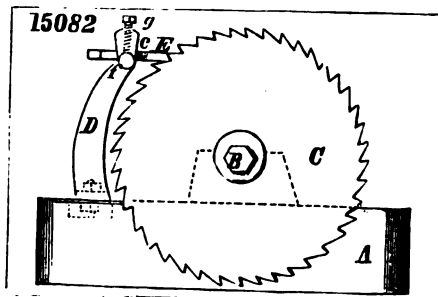

15890

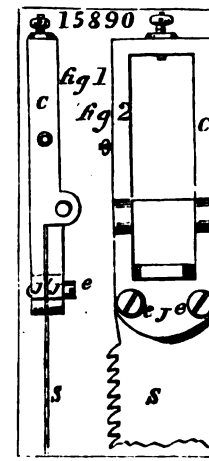

16062

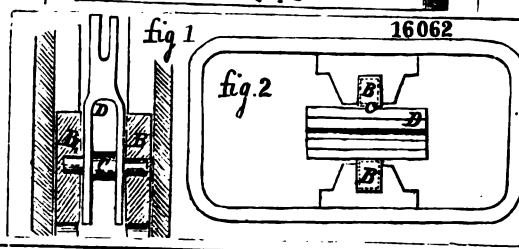

Digitized by Google

14101

fig. 1

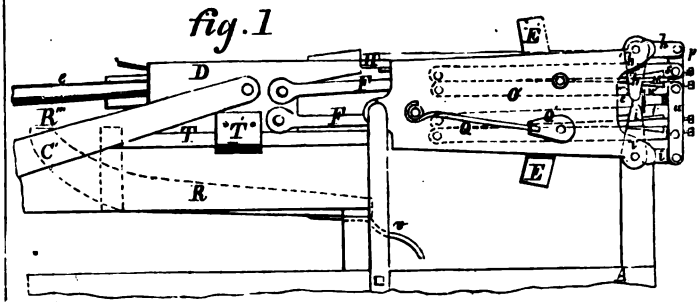

fig. 2.

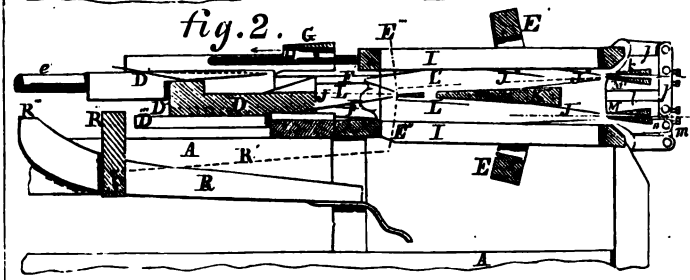

fig. 3

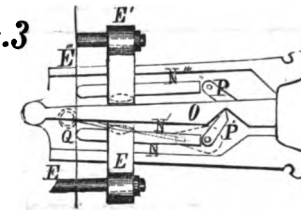

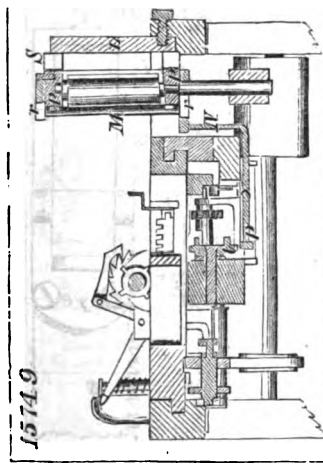

14103

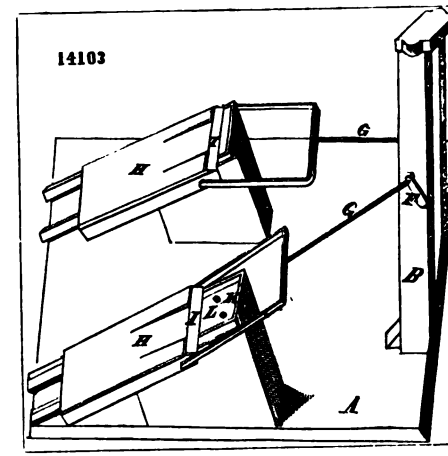

Digitized by Google

14909

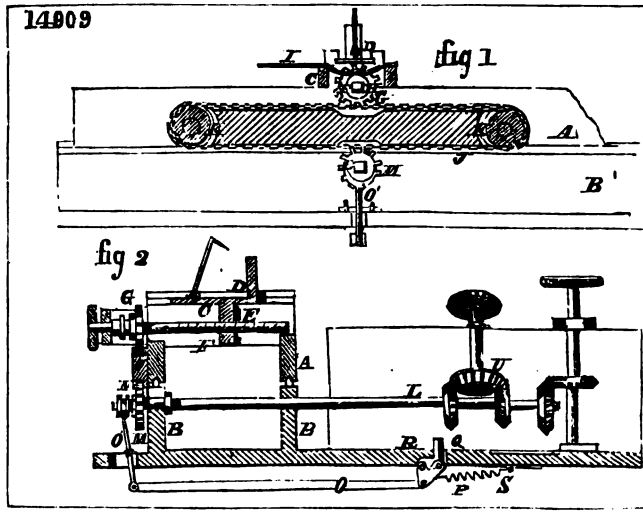

14206

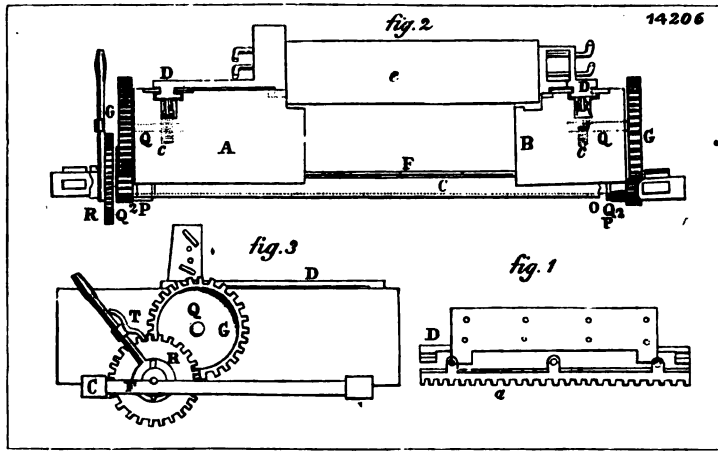

14844

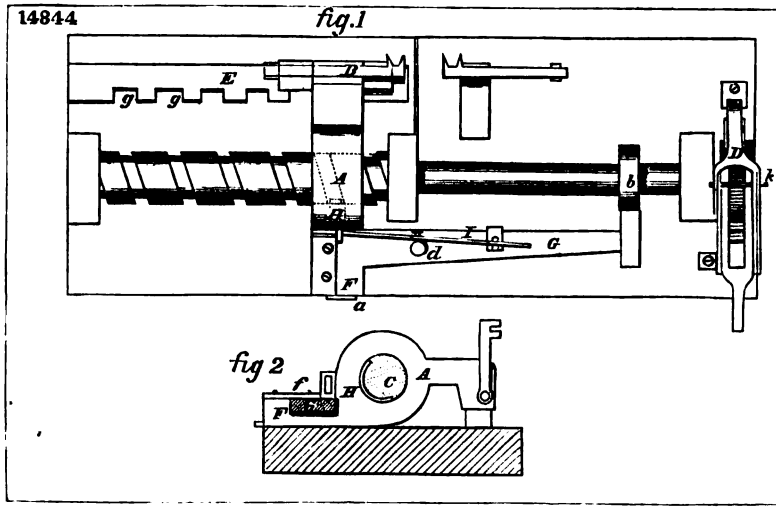

Digitized by Google

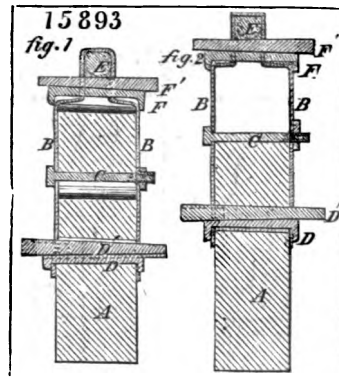

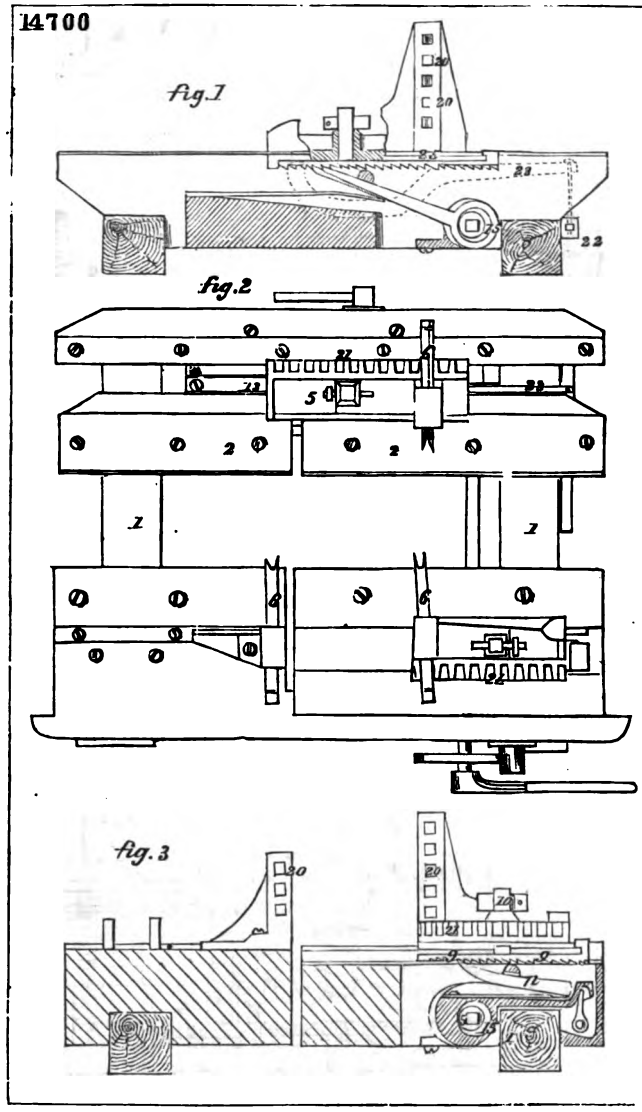

Digitized by Google

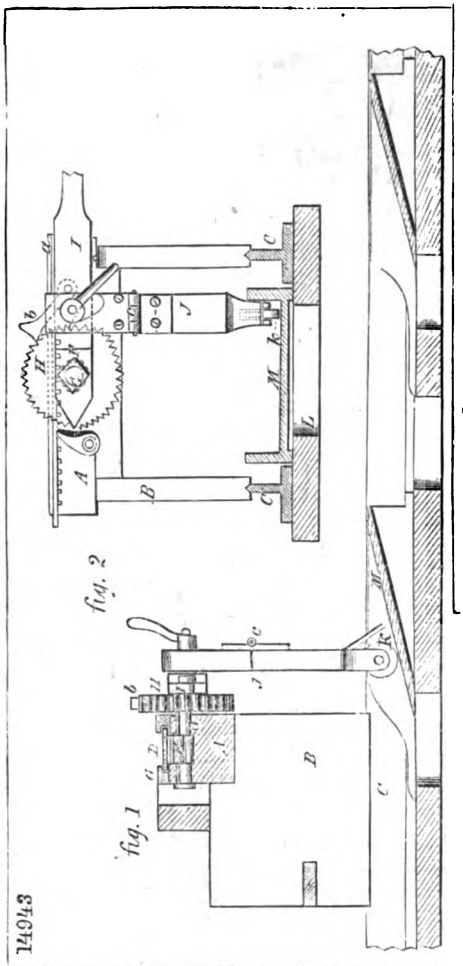

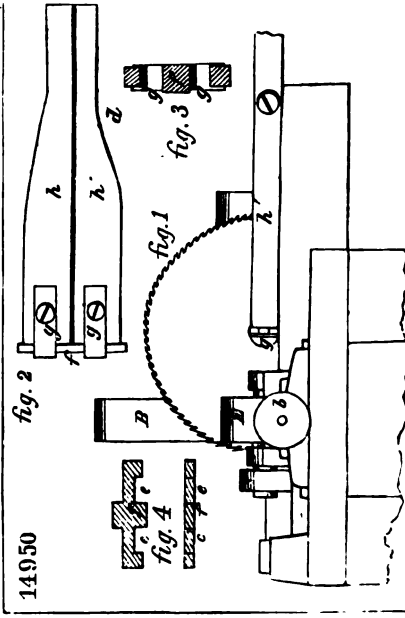

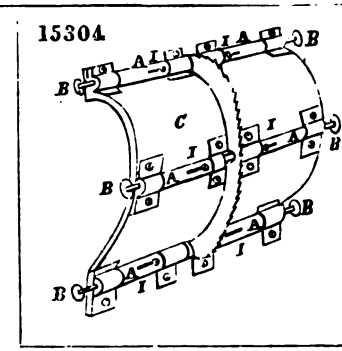

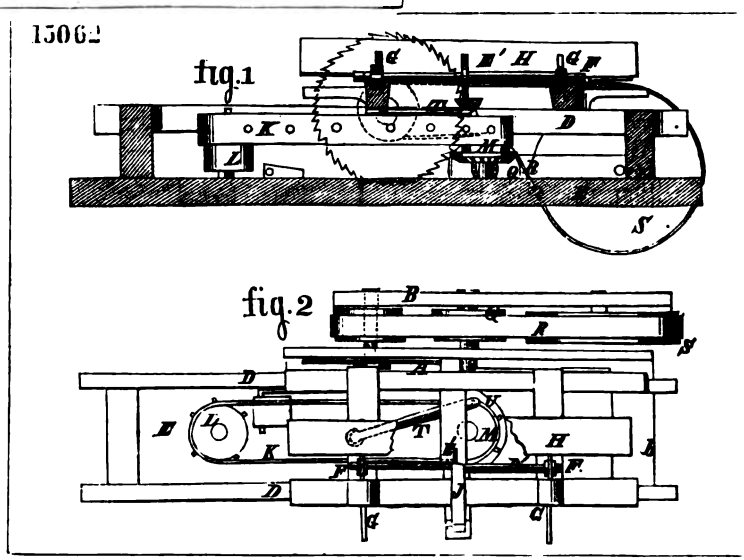

Digitized by Google

14957

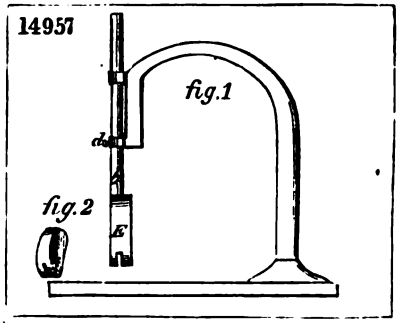

14172

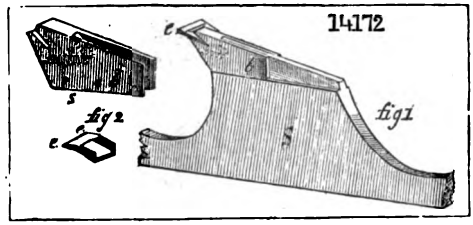

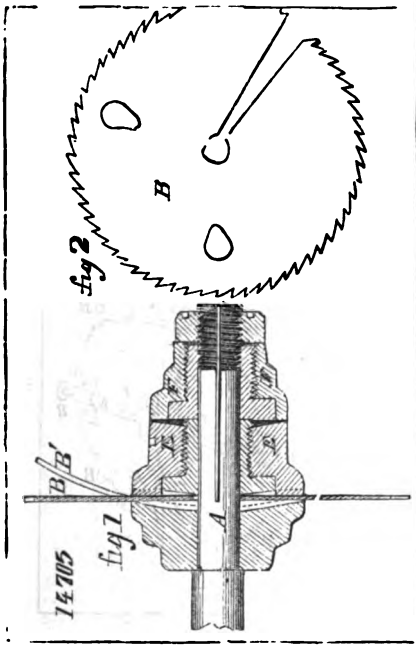

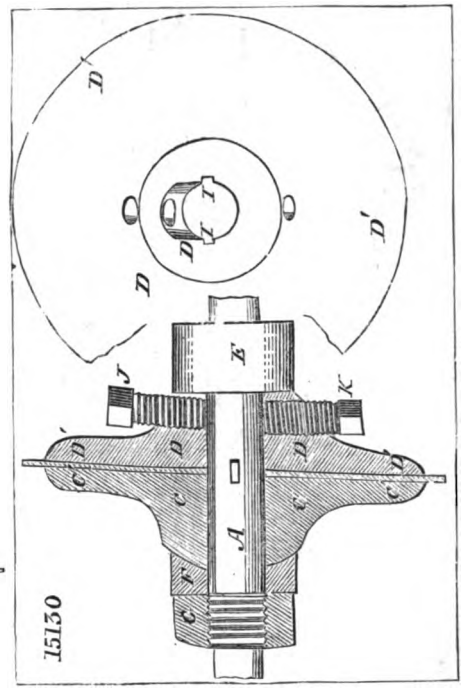

14379

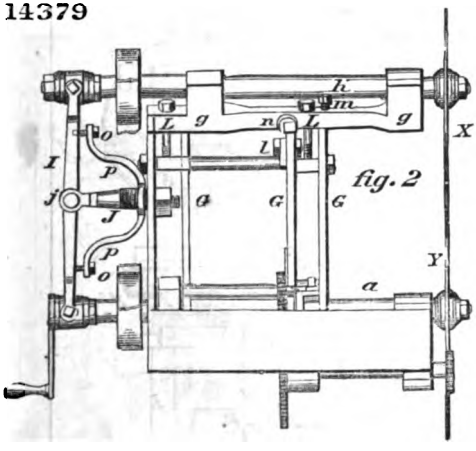

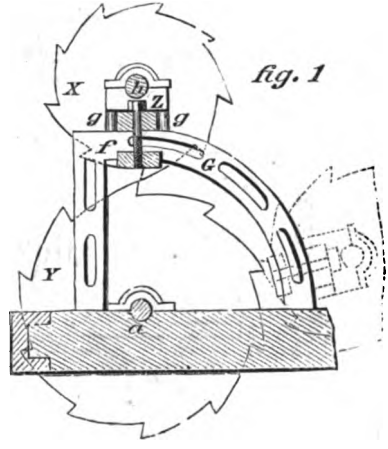

Digitized by Google

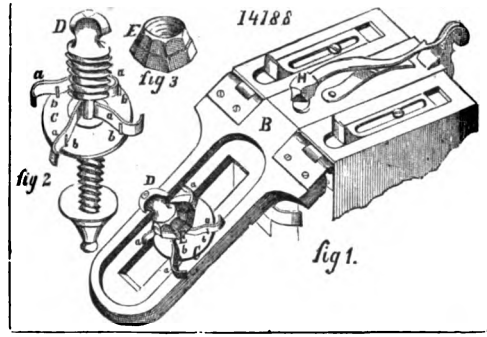

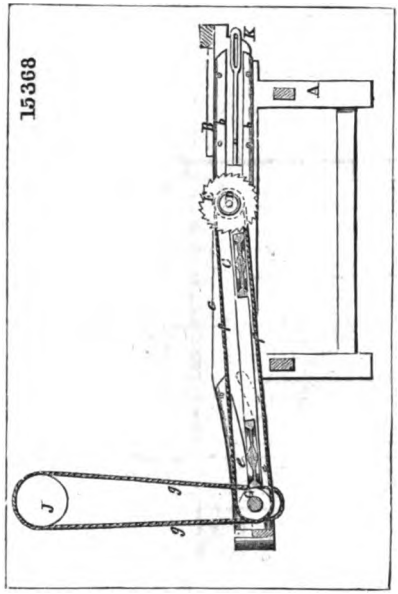

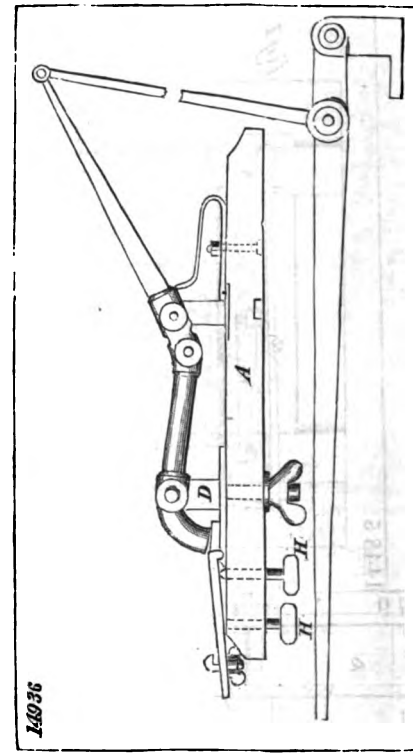

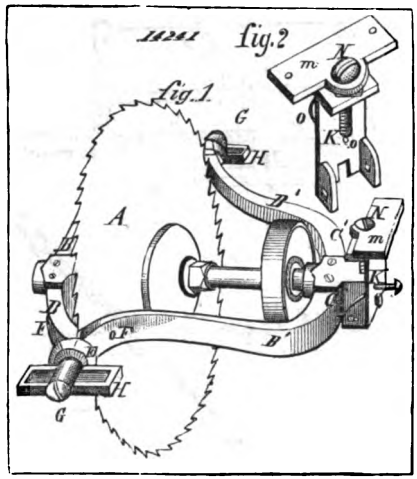

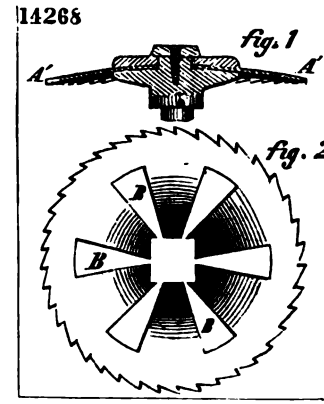

Digitized by Google

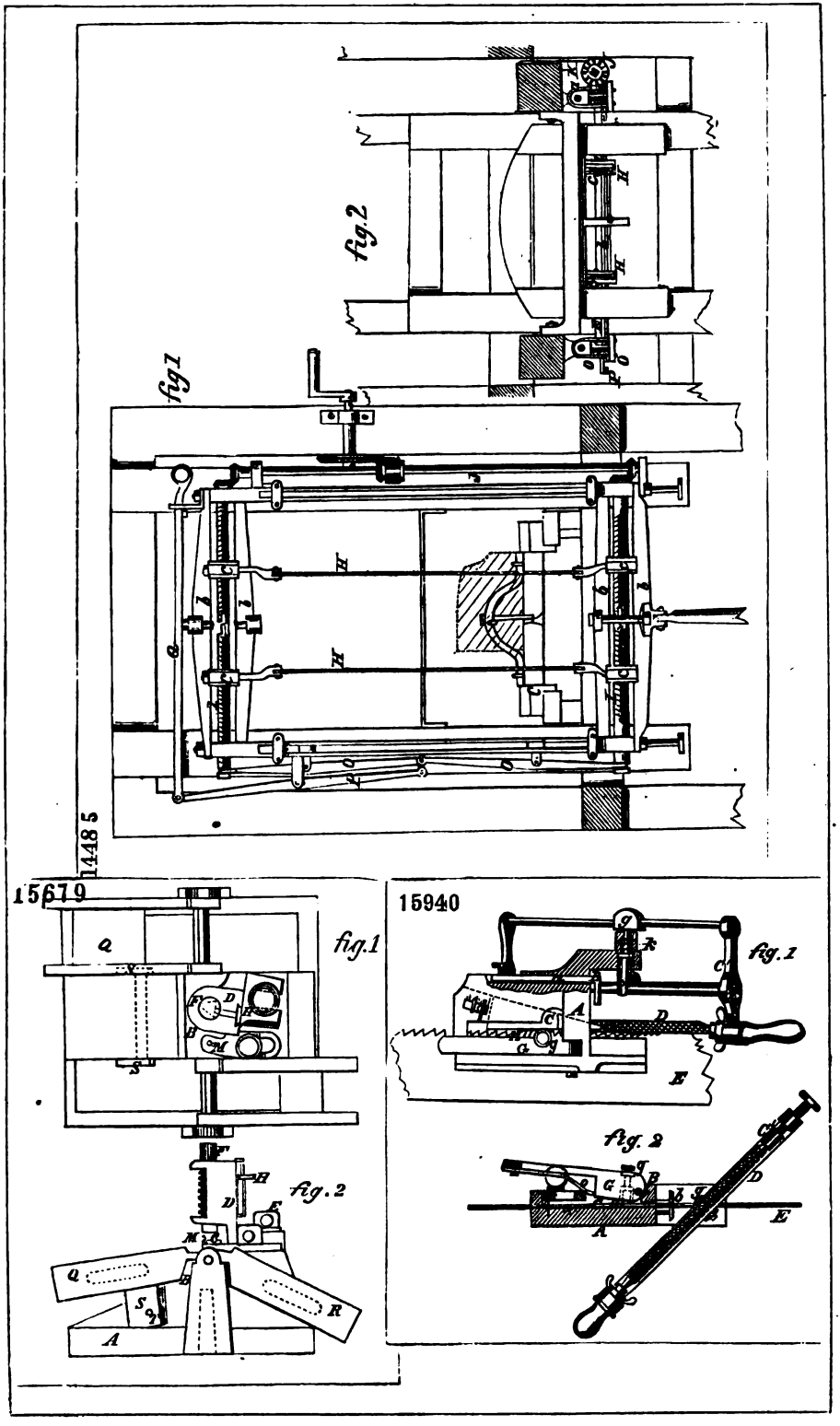

Digitized by Google

14413

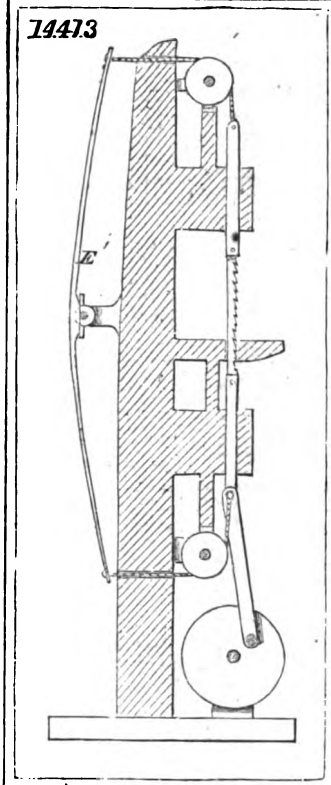

14055

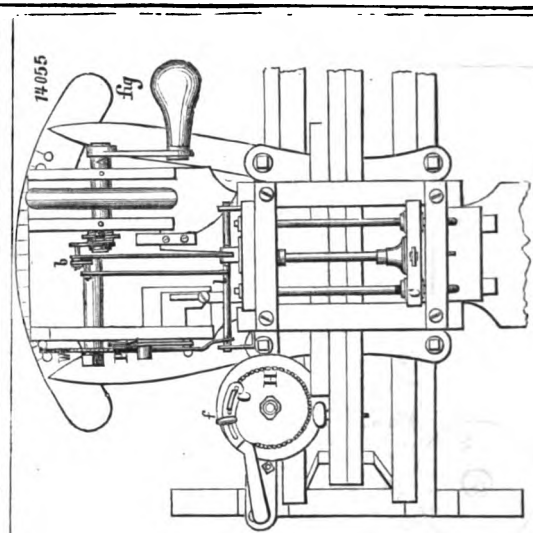

fig 2

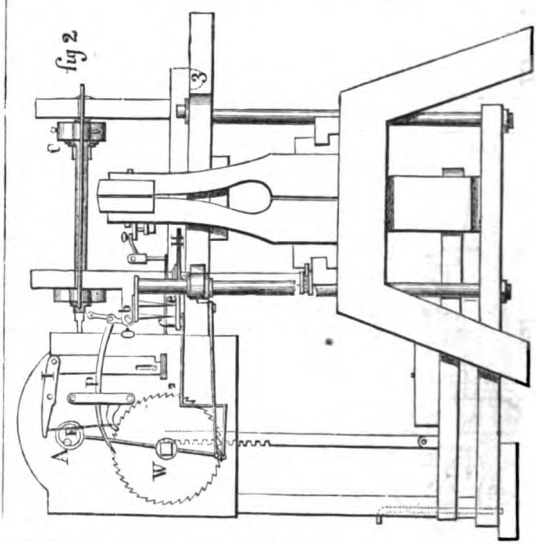

15731

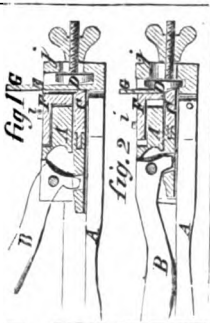

15007

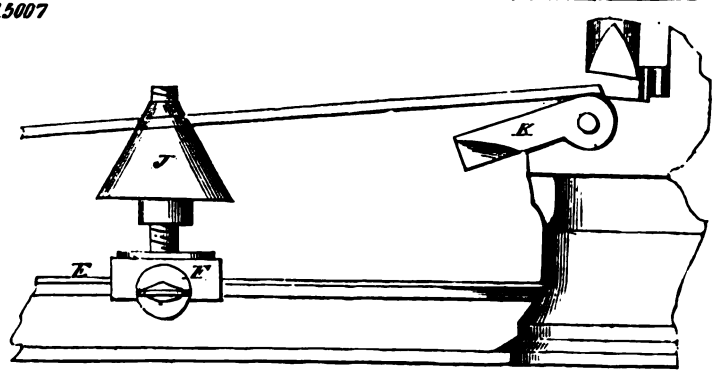

Digitized by Google

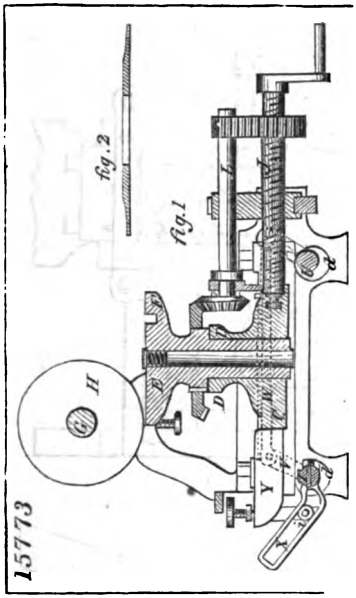

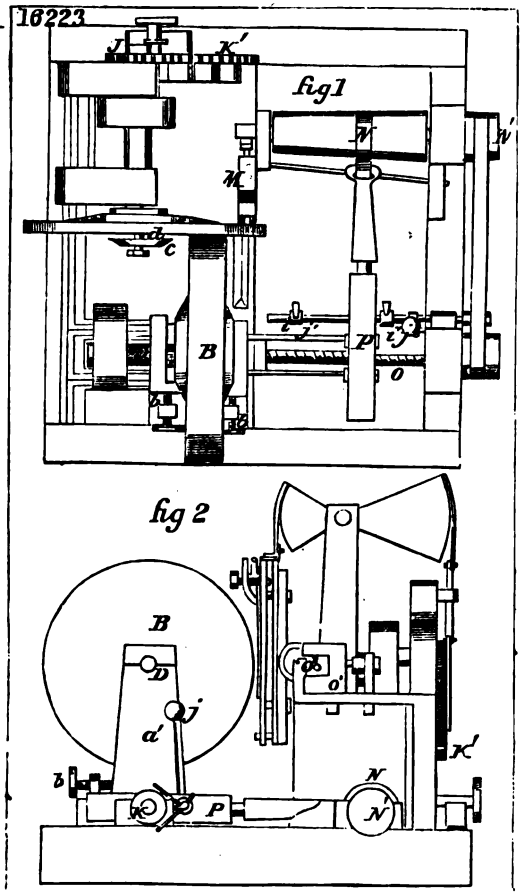

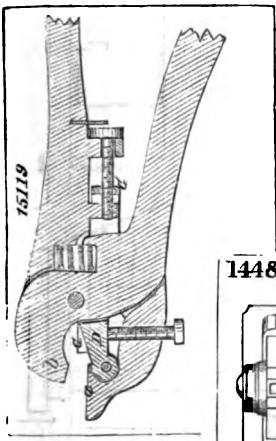

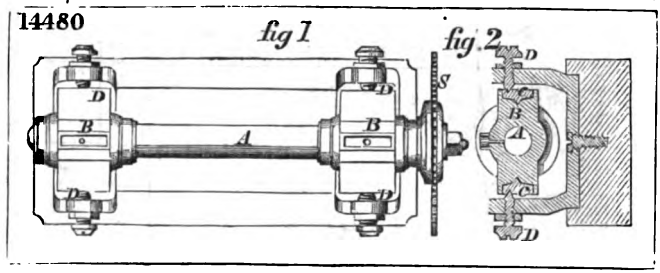

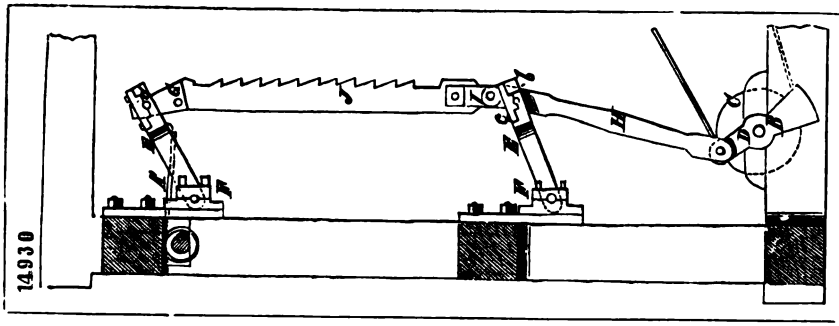

Digitized by Google

16295

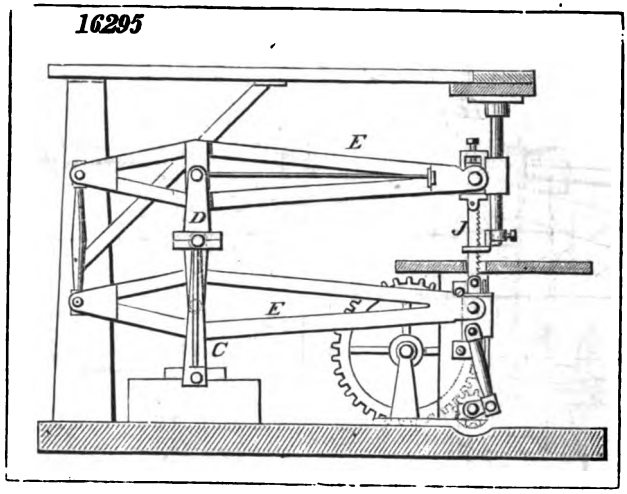

15220

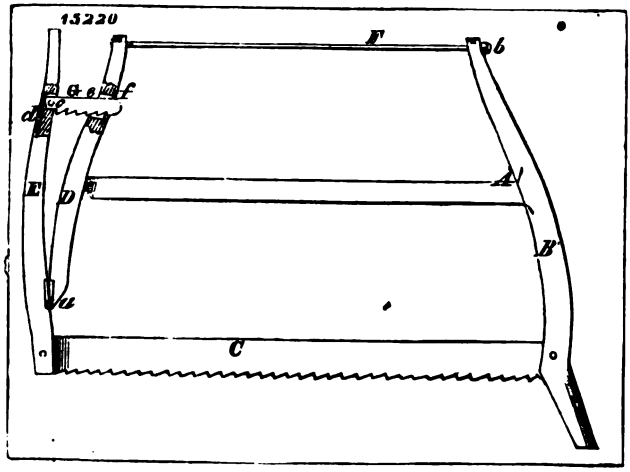

15082

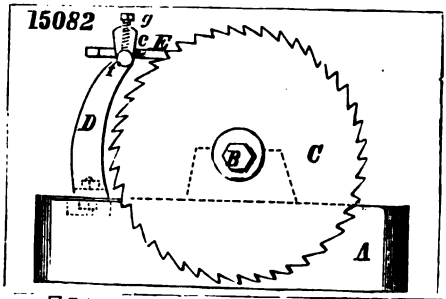

15890

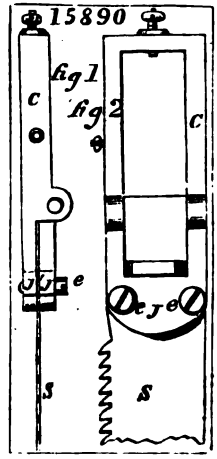

16062

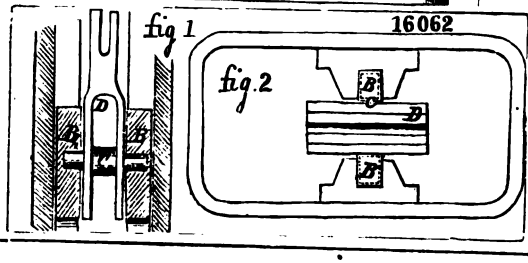

Digitized by Google

14101

fig. 1

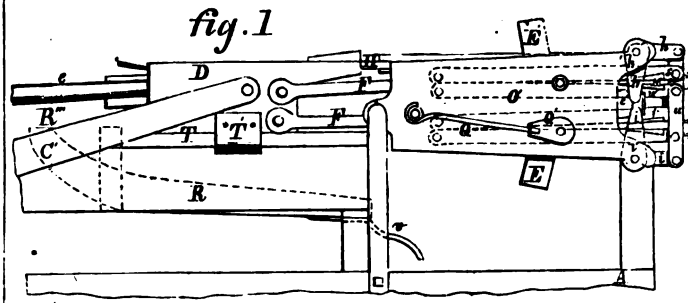

fig. 2.

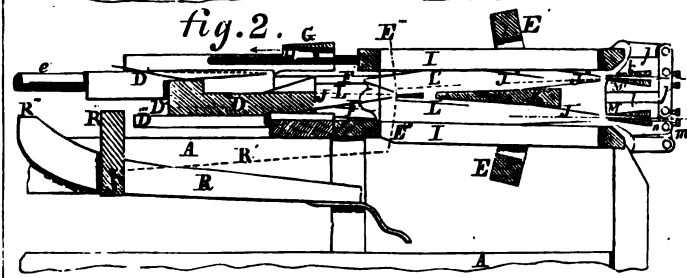

fig. 3

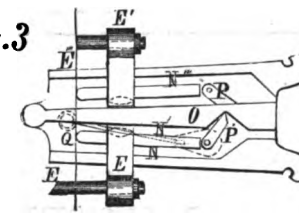

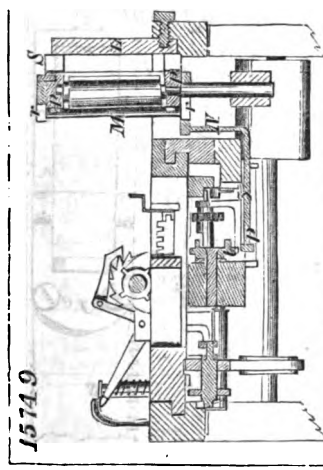

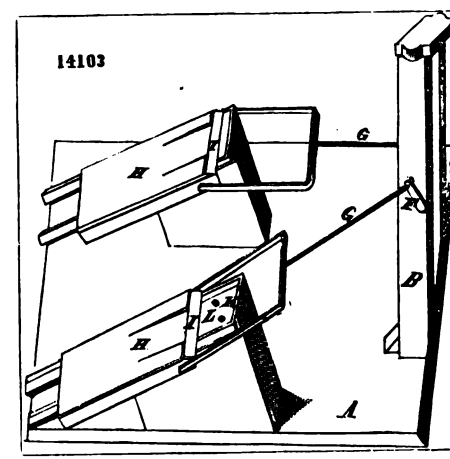

Digitized by Google

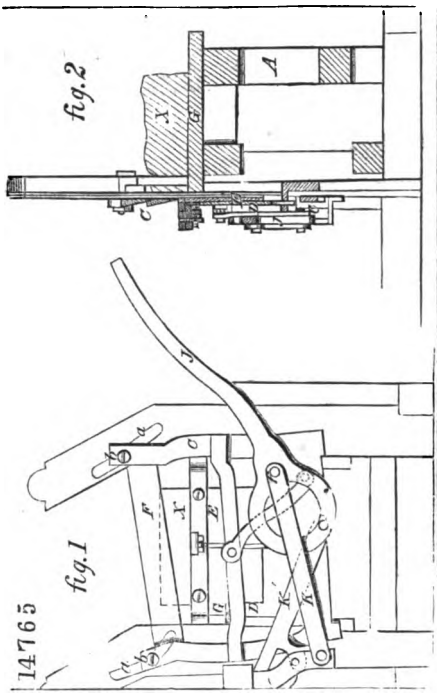

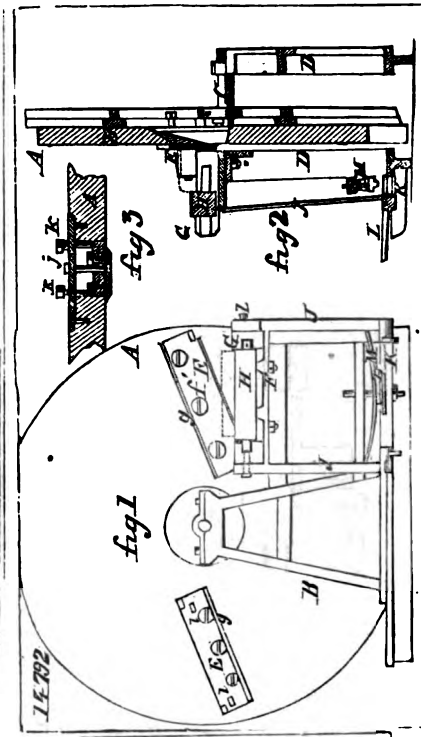

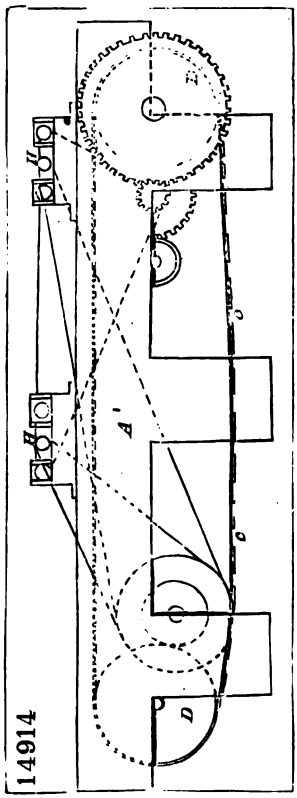

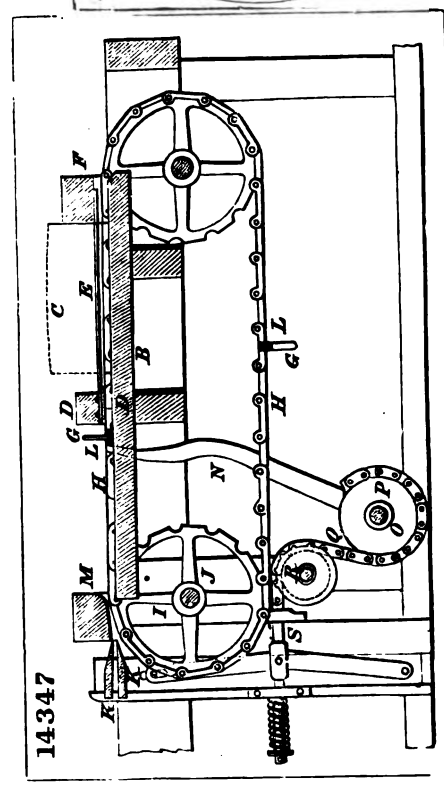

Digitized by Google

14977

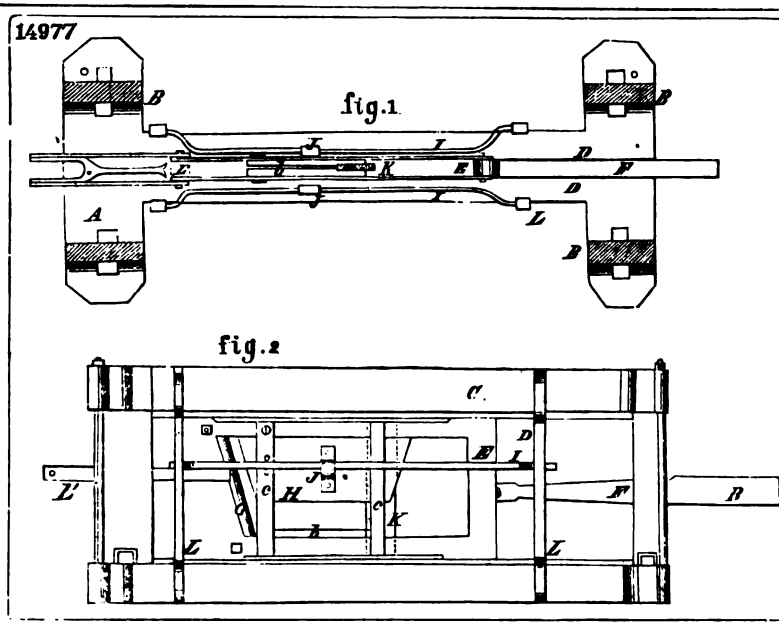

15756

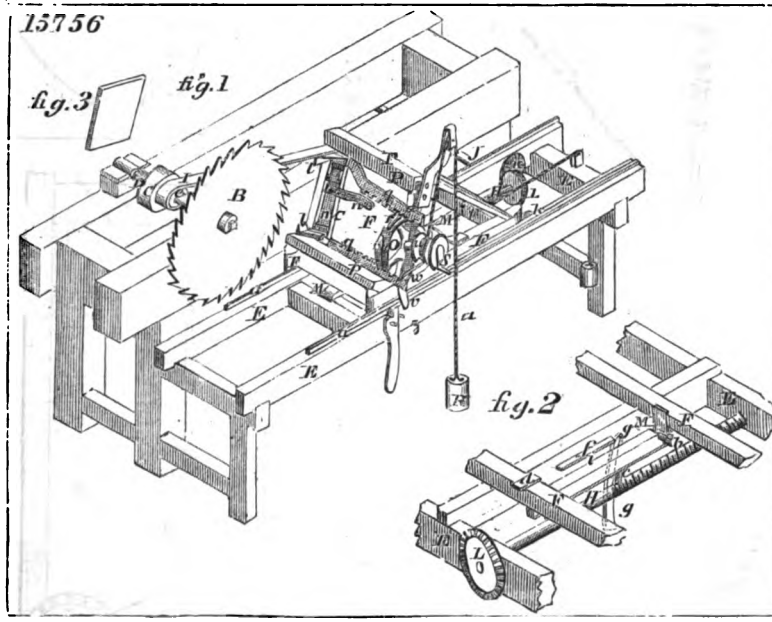

15302

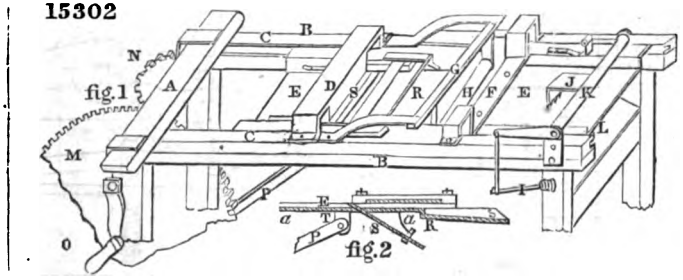

Digitized by Google

15720

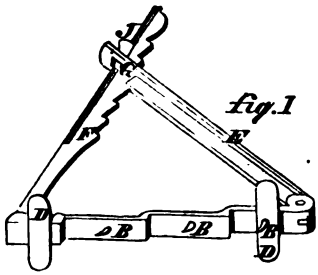

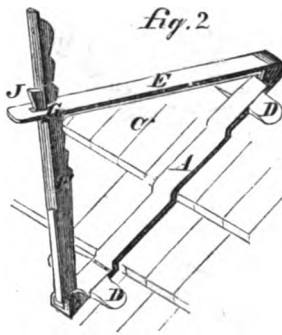

15081

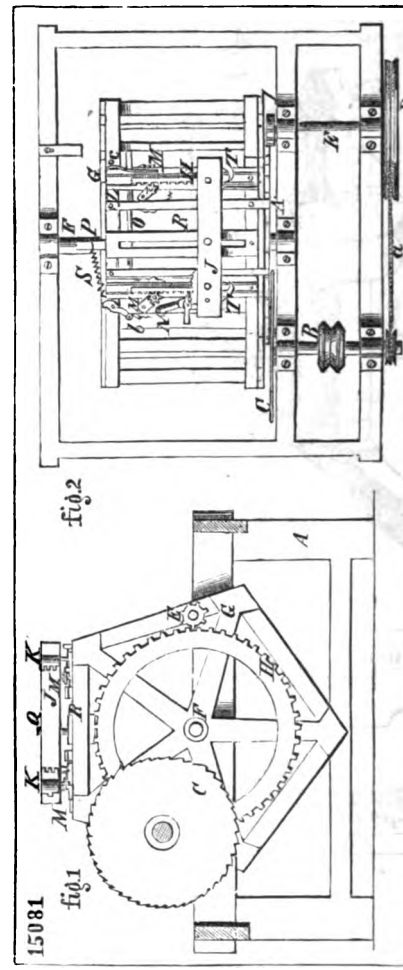

15747

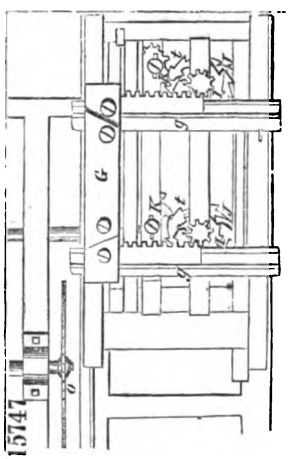

15728

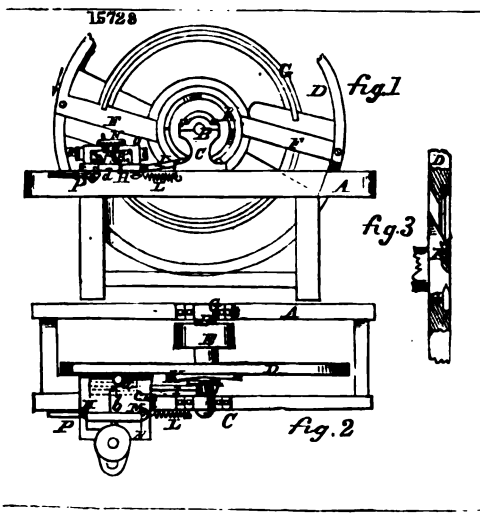

Digitized by Google

16121

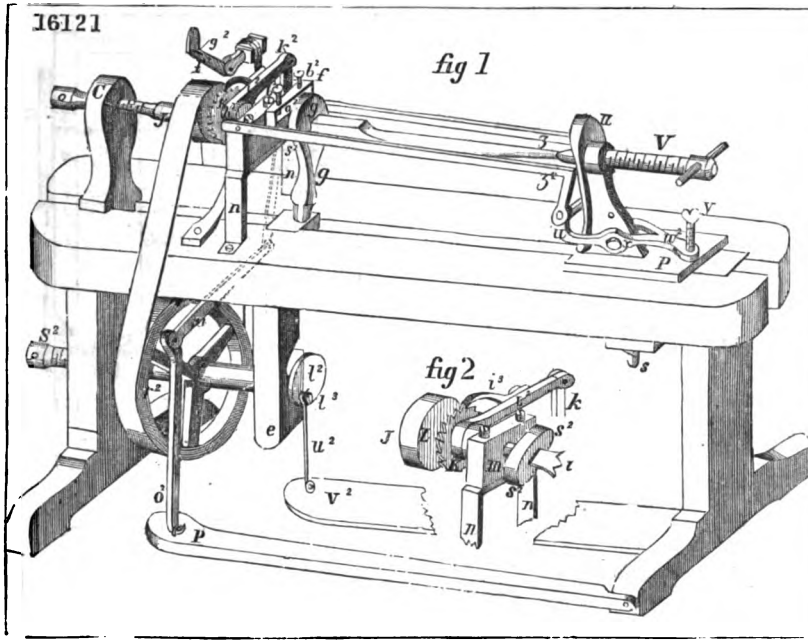

14018

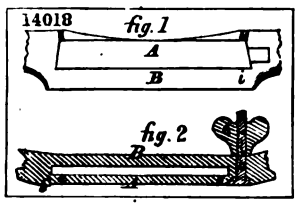

14635

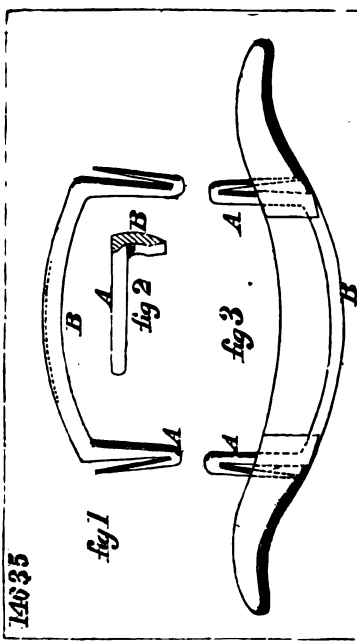

14718

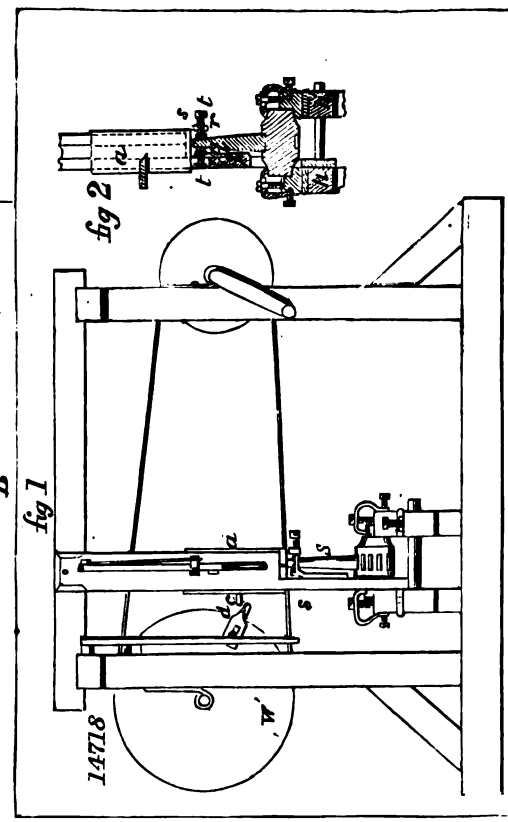

Digitized by Google

15423

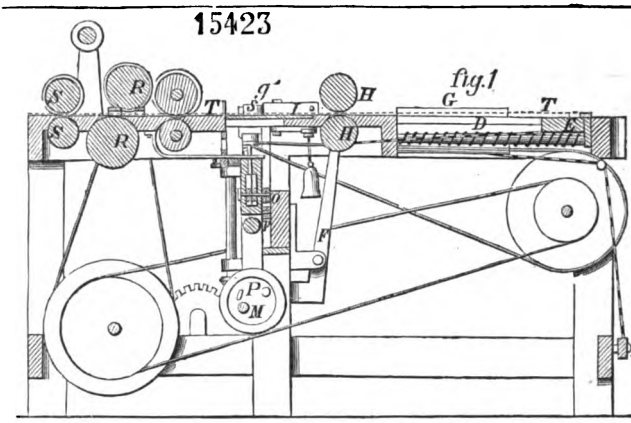

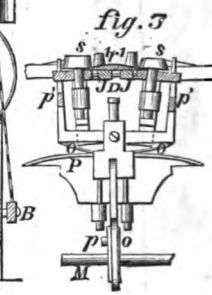

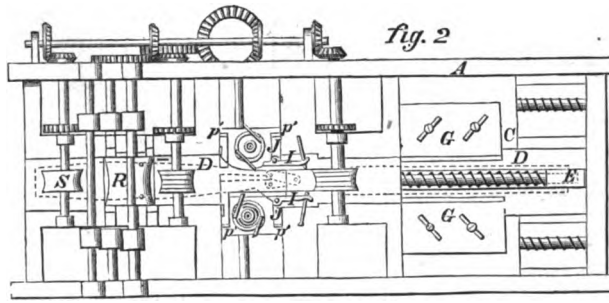

15446

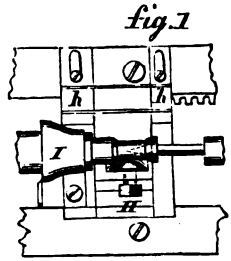

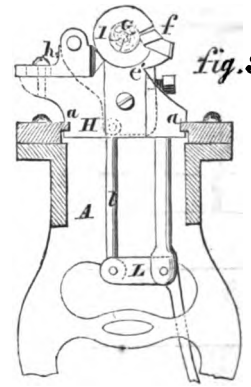

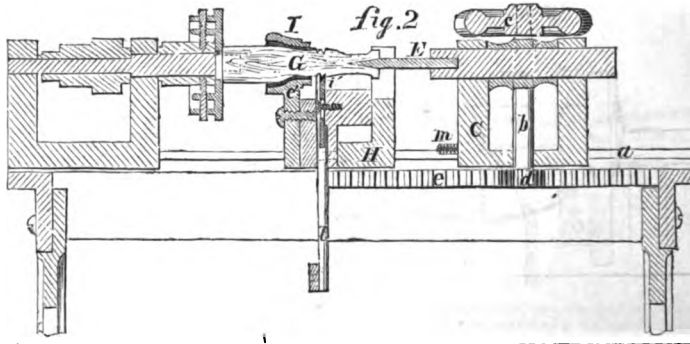

Digitized by Google

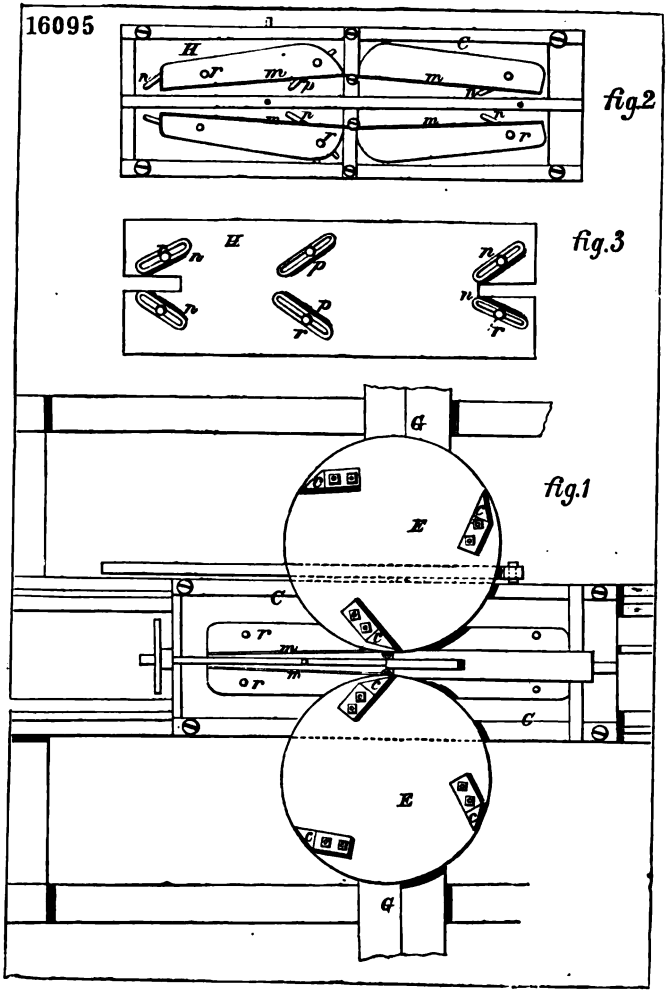

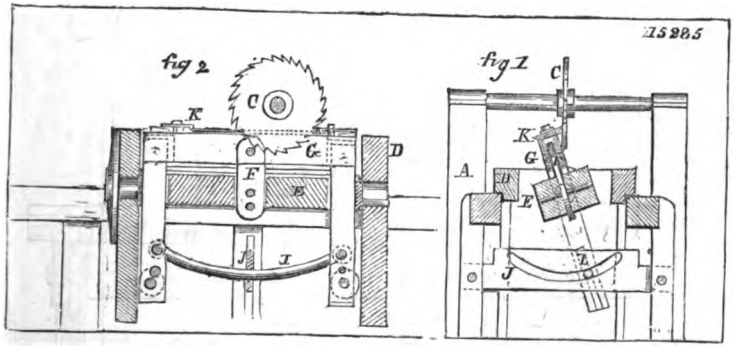

Digitized by Google

14299

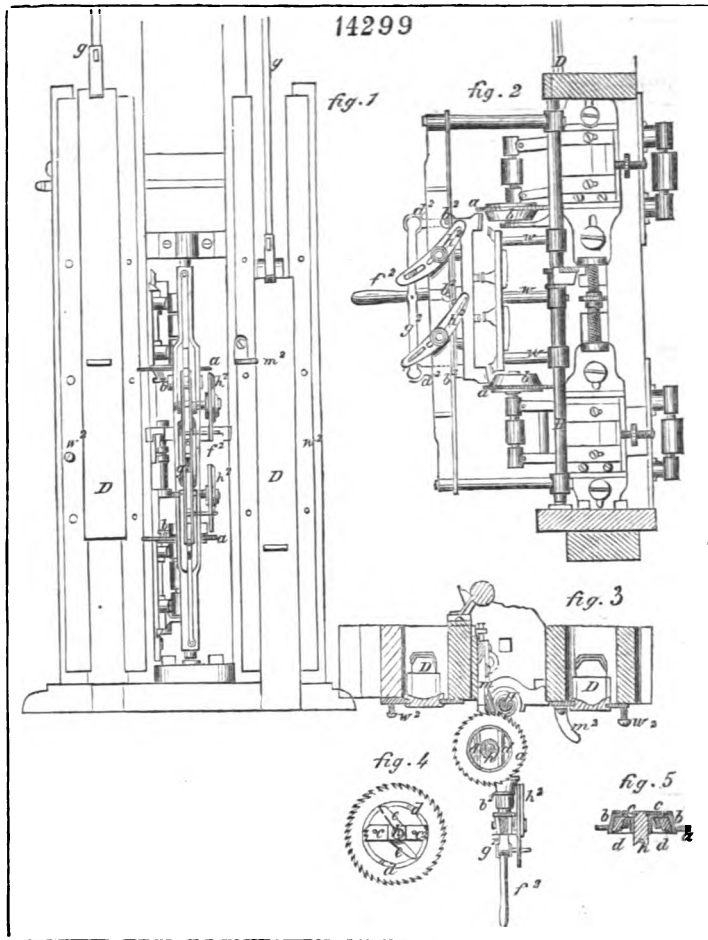

15429

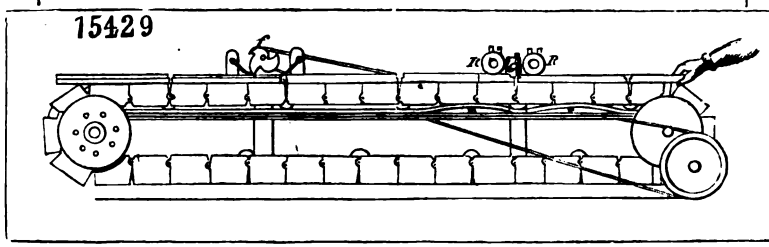

15757

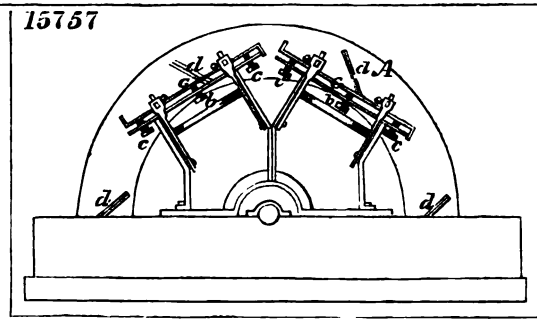

Digitized by Google

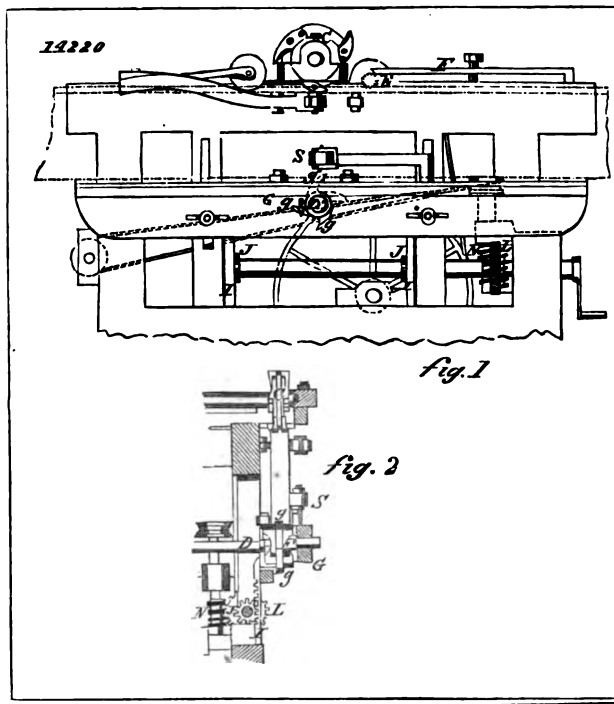

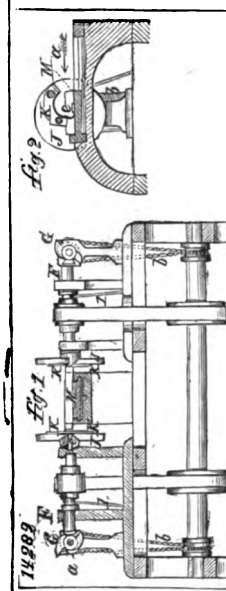

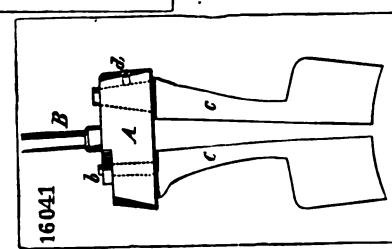

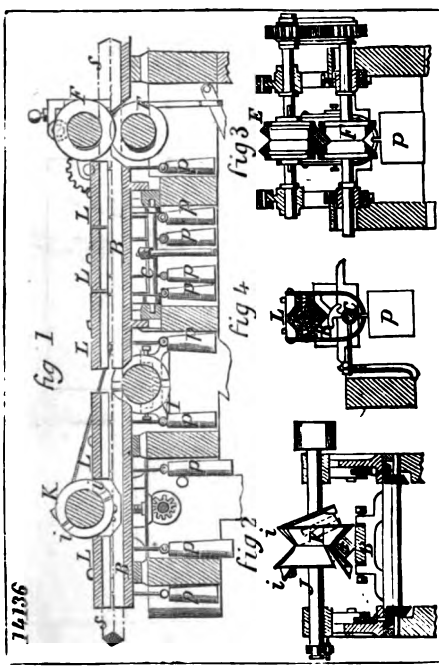

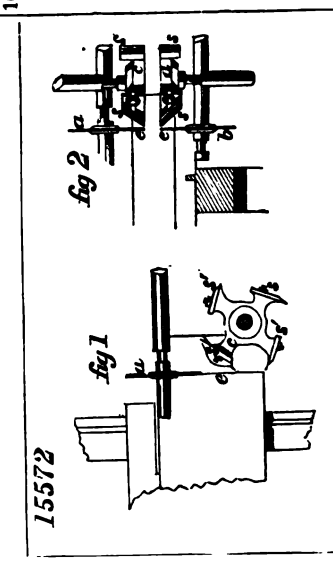

Digitized by Google

14713.

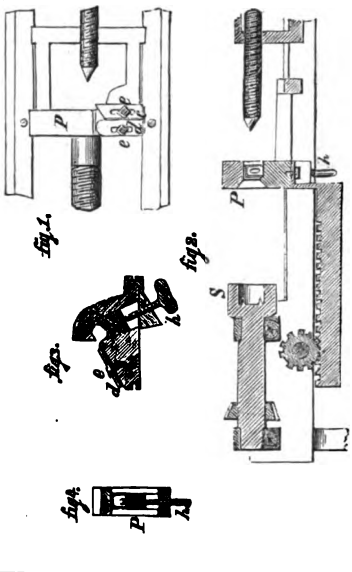

15310

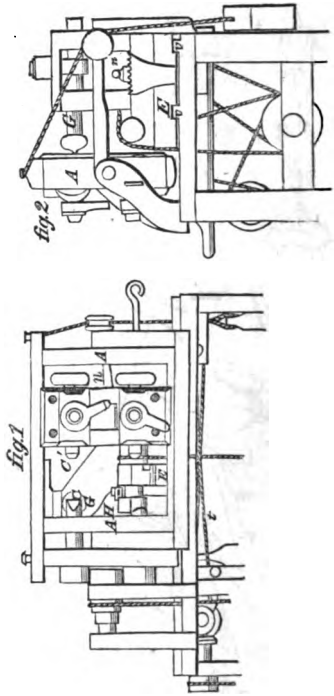

15913.

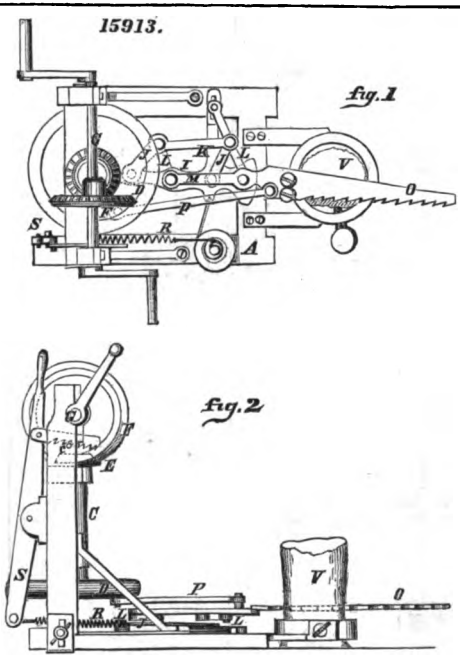

15178

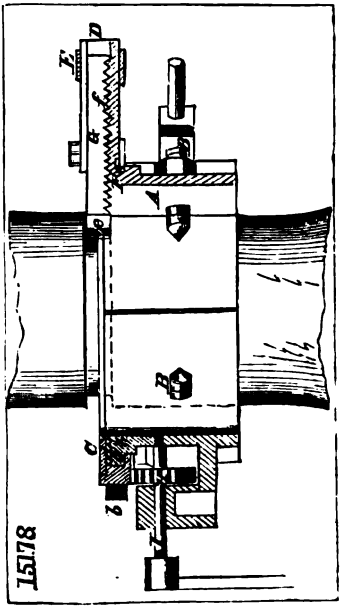

Digitized by Google

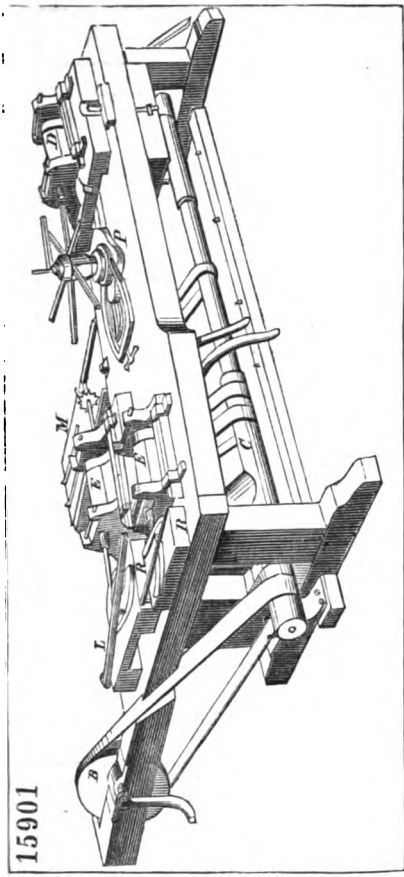

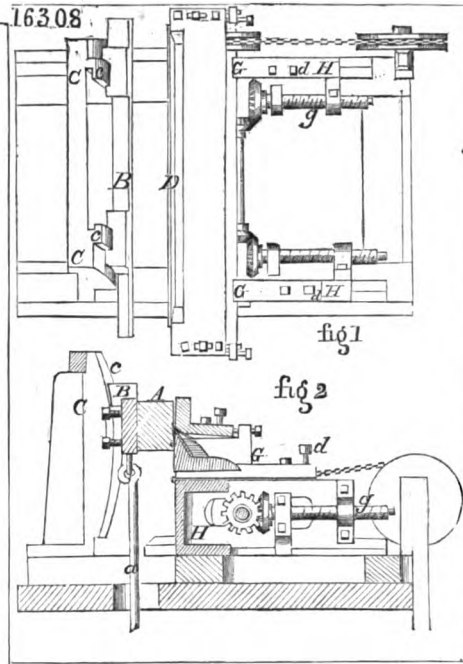

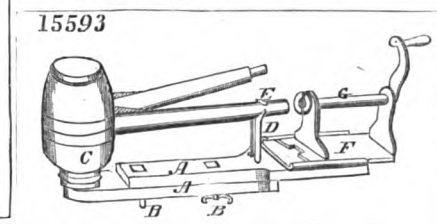

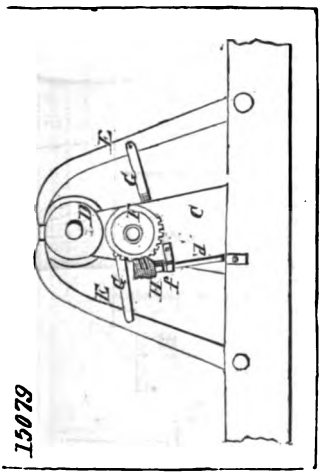

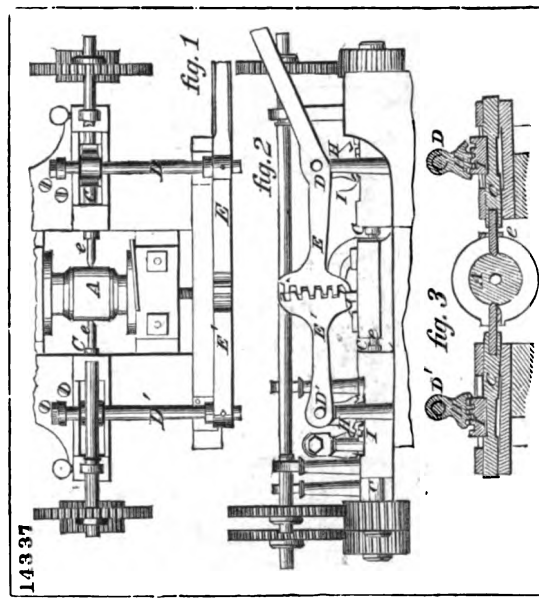

Digitized by Google

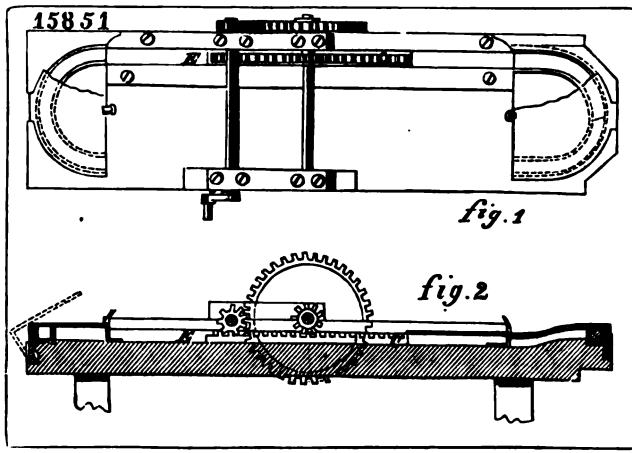

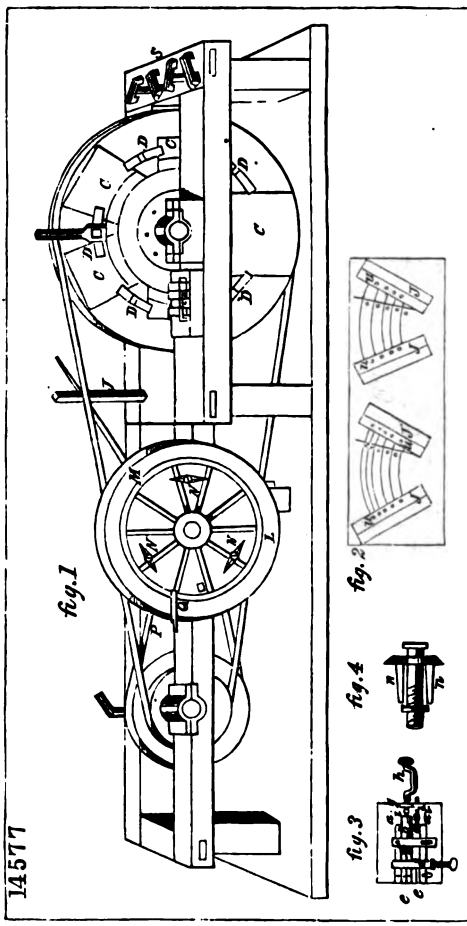

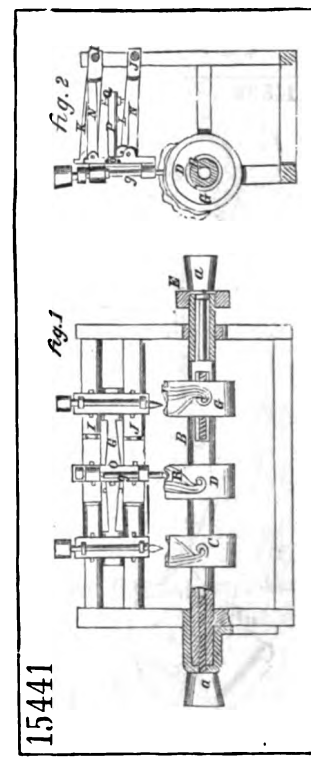

Digitized by Google

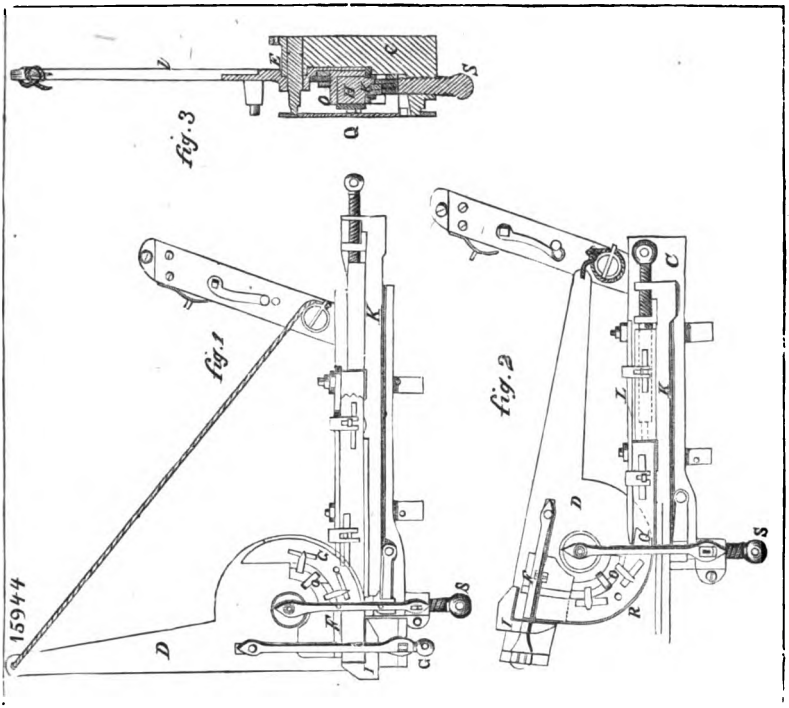

14636

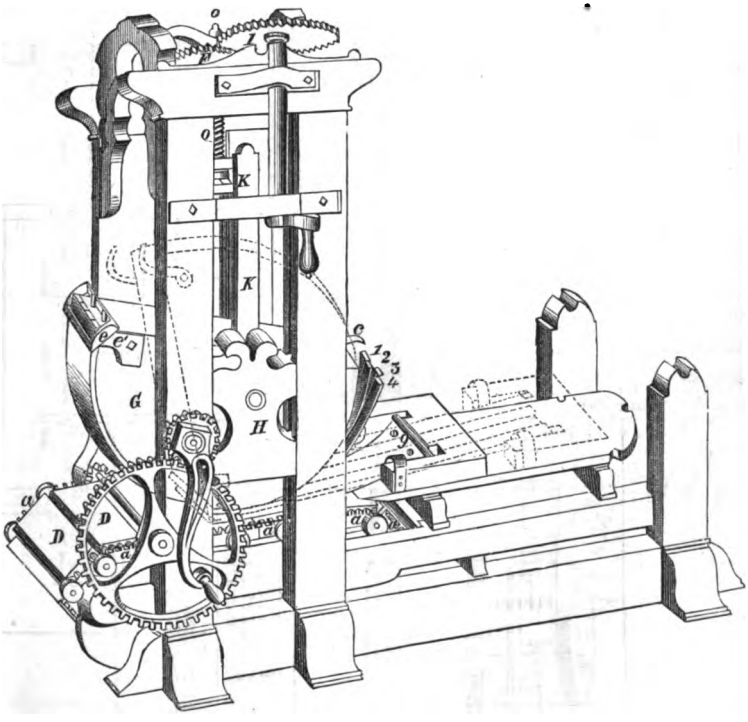

Digitized by Google

16157

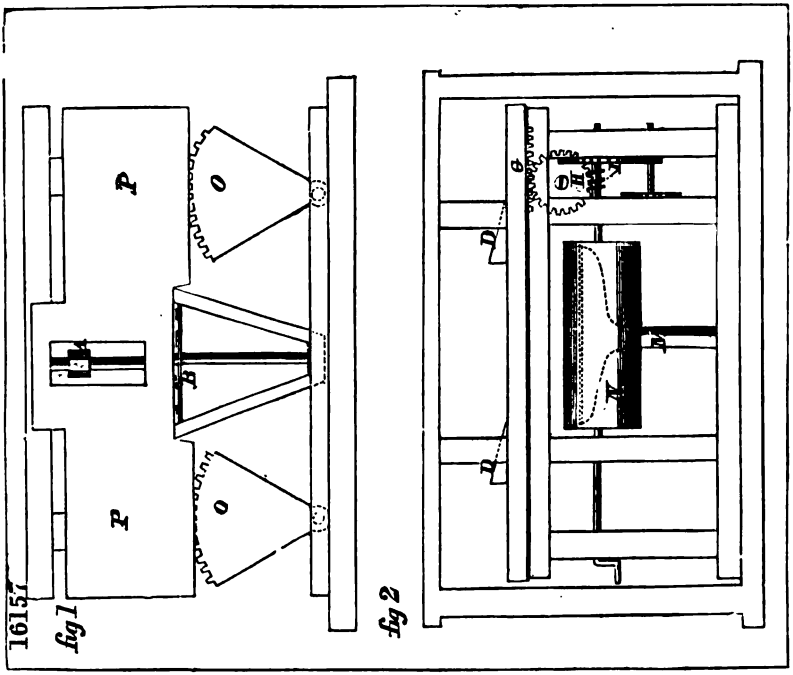

14405

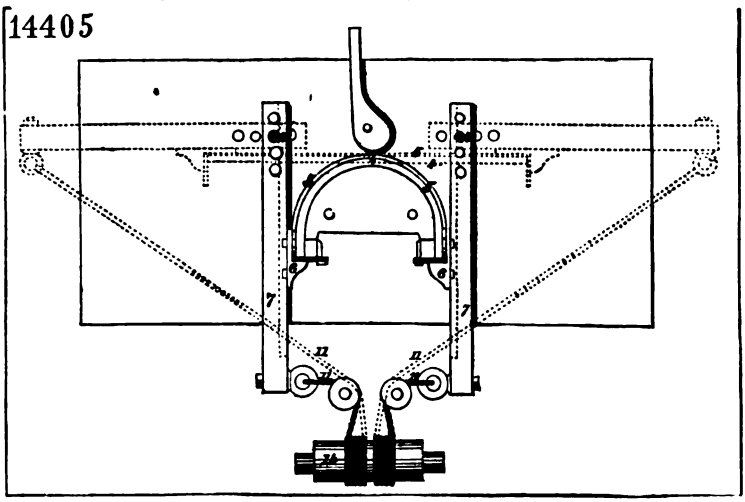

14807

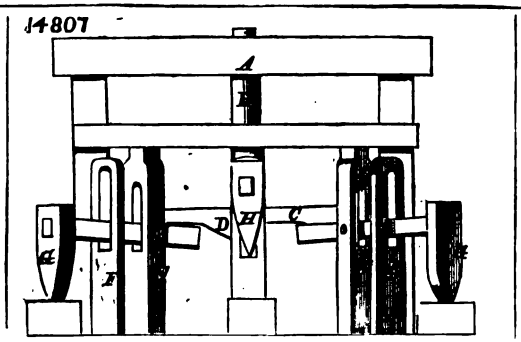

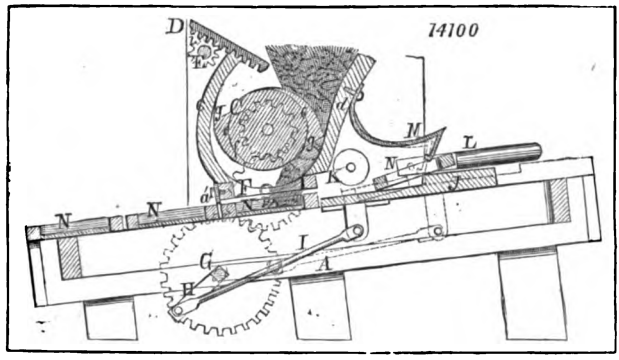

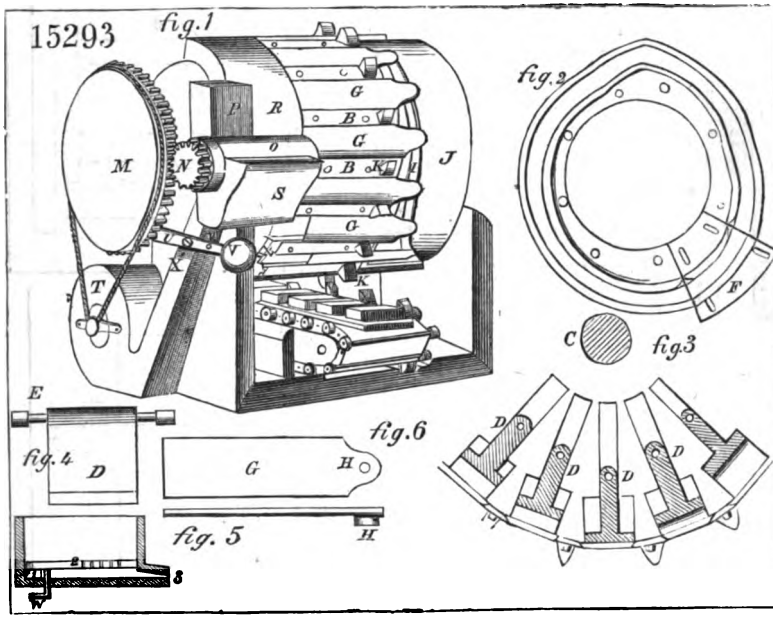

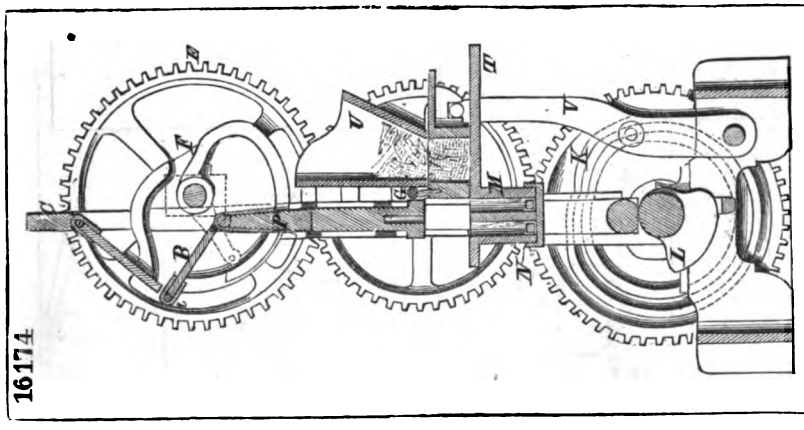

Digitized by Google

14947

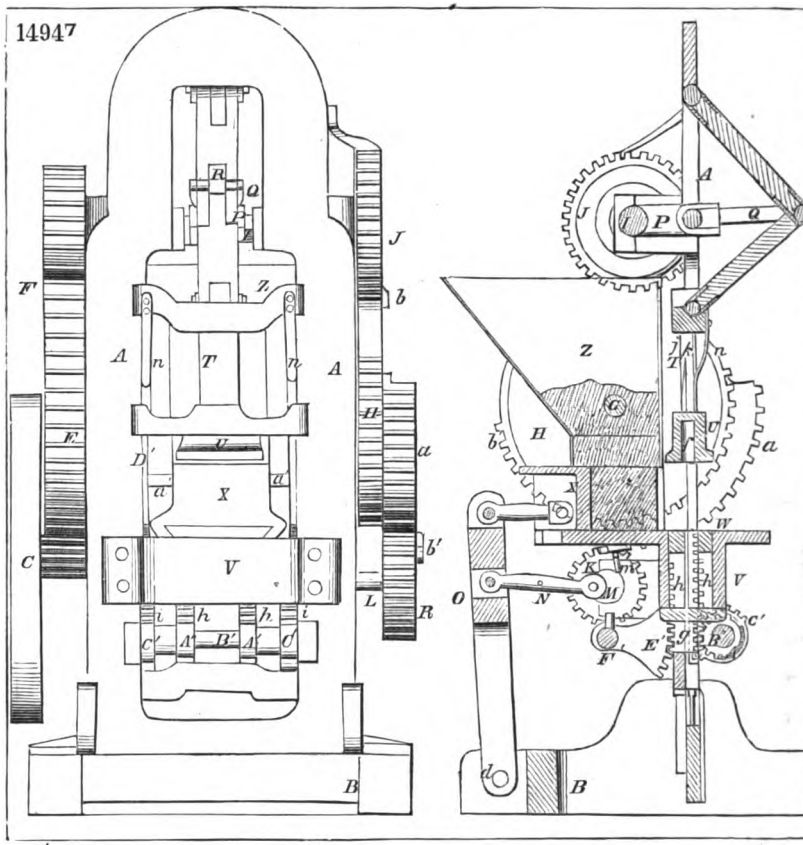

14155

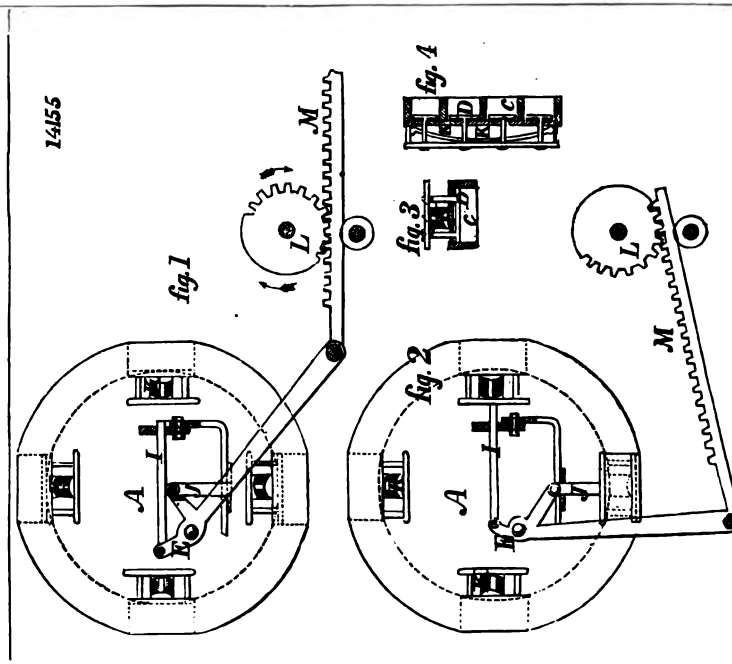

Digitized by Google

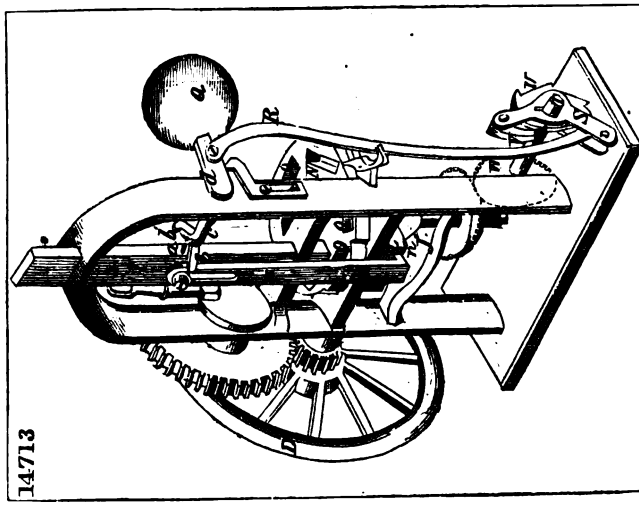

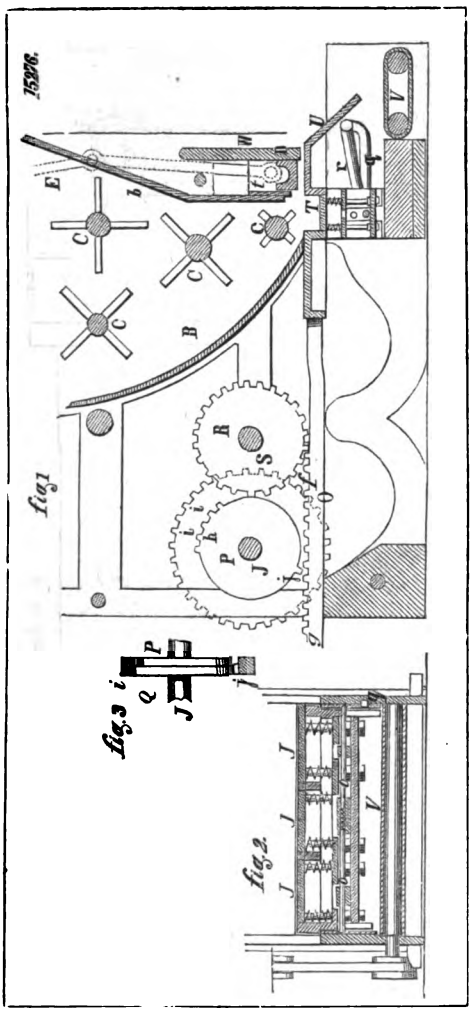

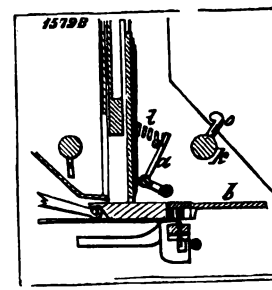

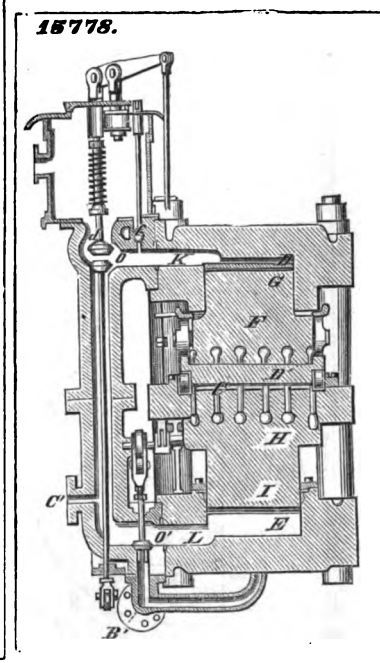

Digitized by Google

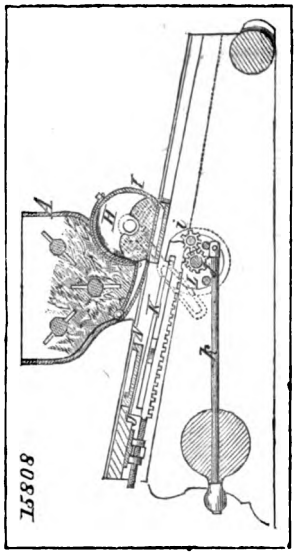

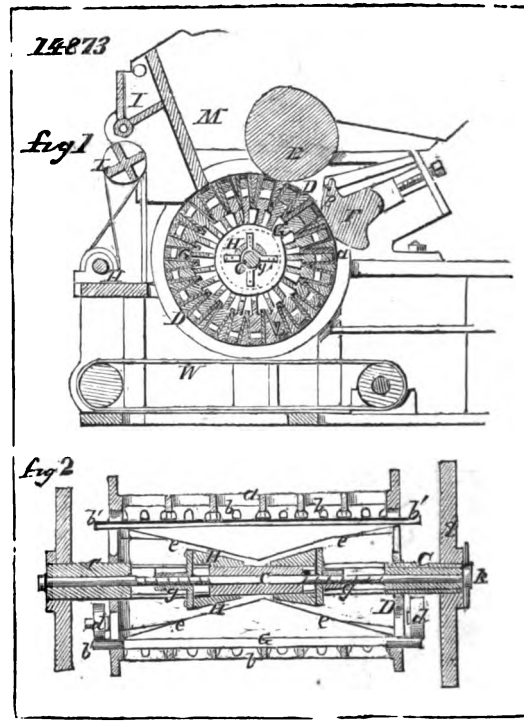

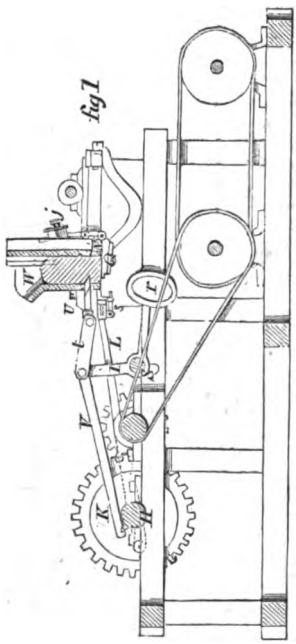

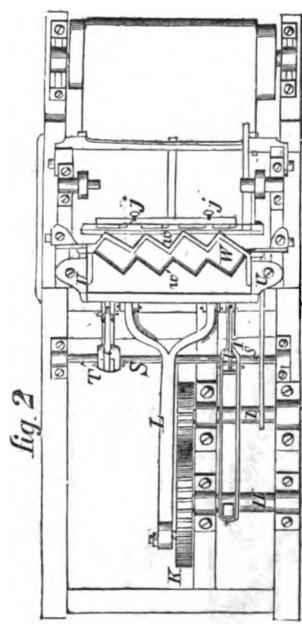

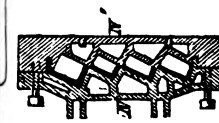

Digitized by Google

14012.

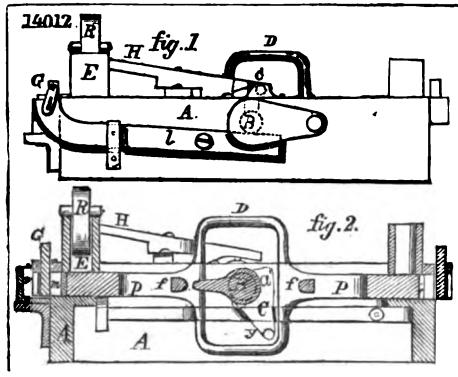

15618

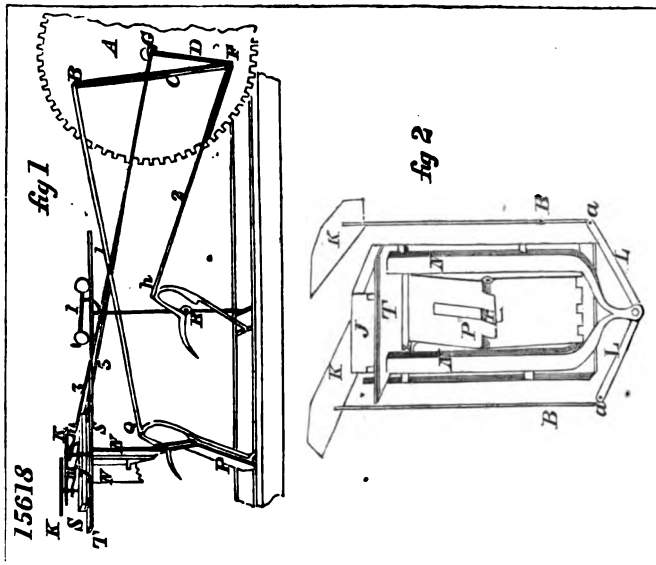

15766.

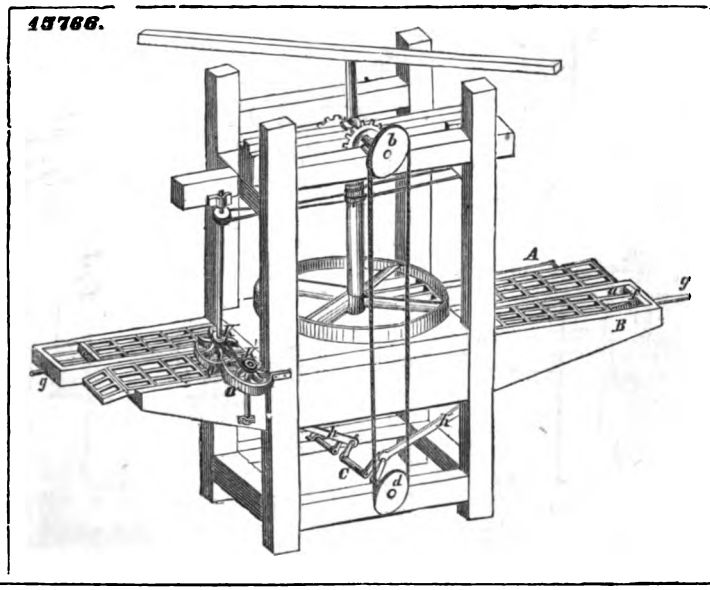

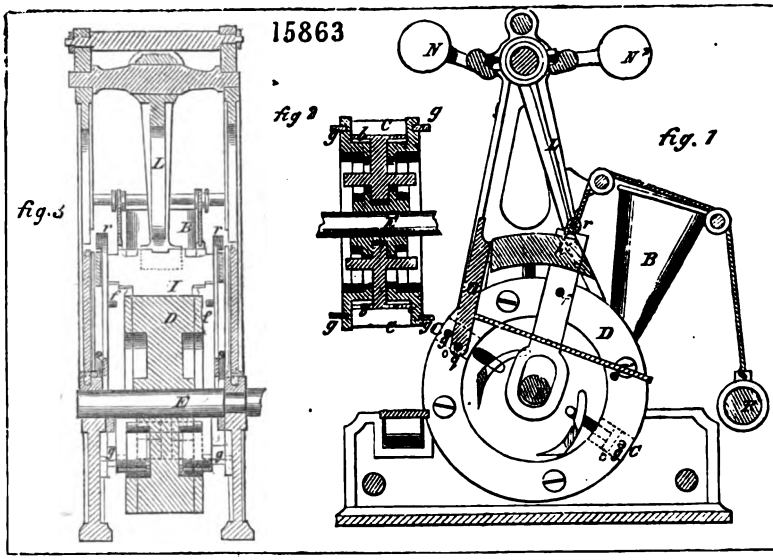

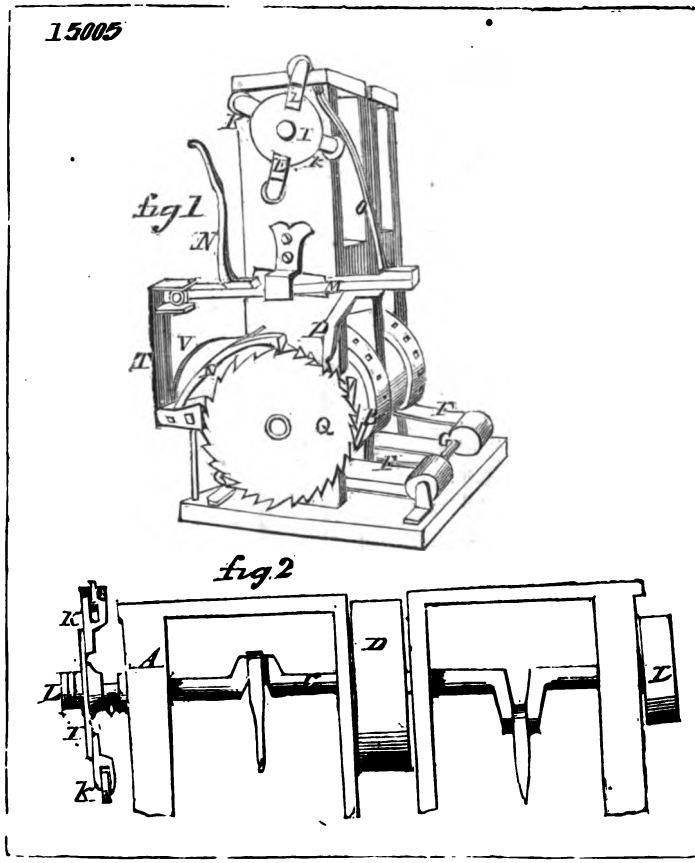

Digitized by Google

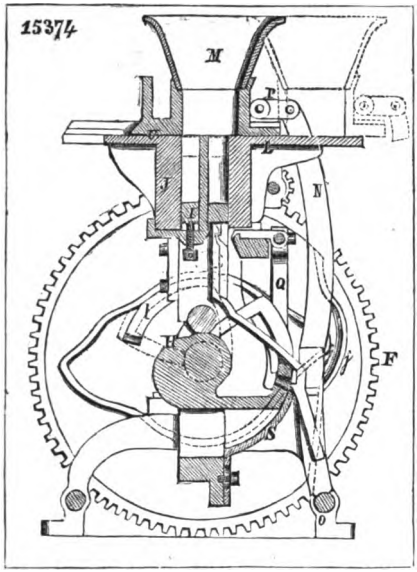

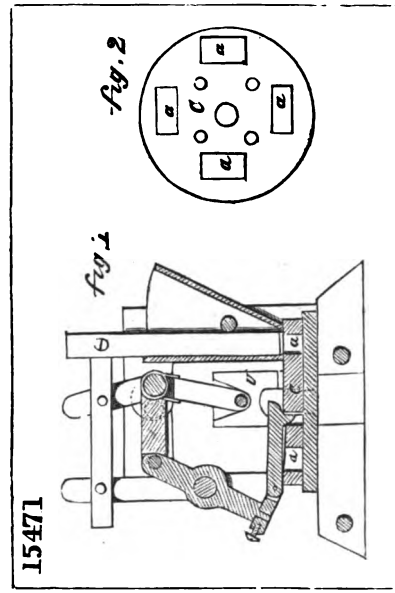

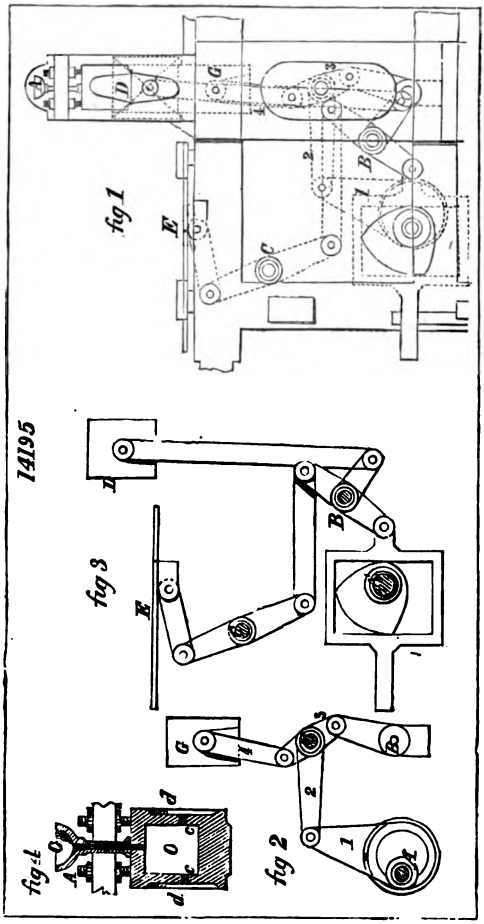

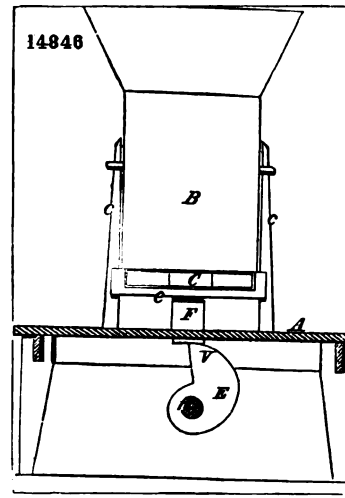

Digitized by Google

15135

fig.1

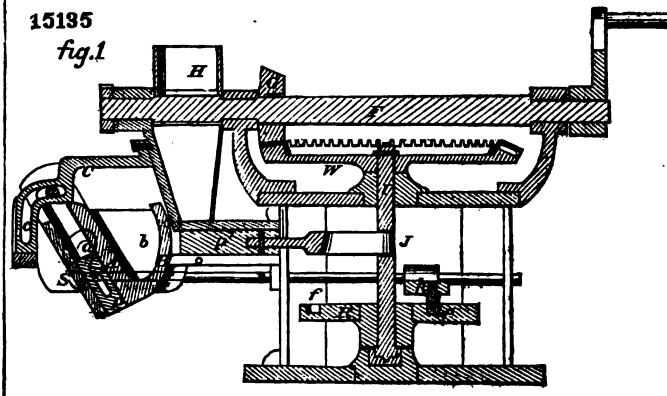

fig.2

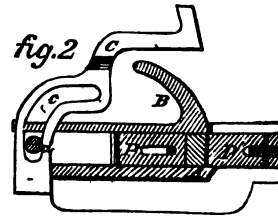

15329.

fig.1

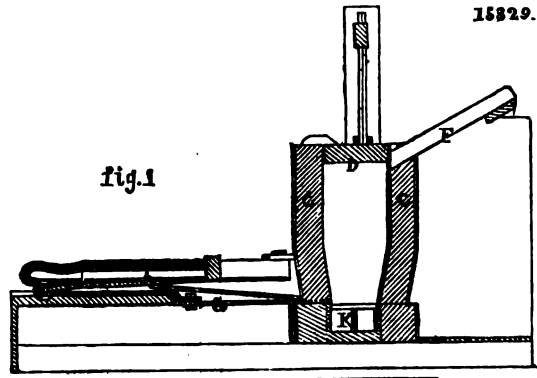

fig.2.

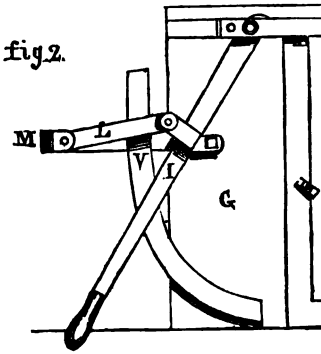

Digitized by Google

15540

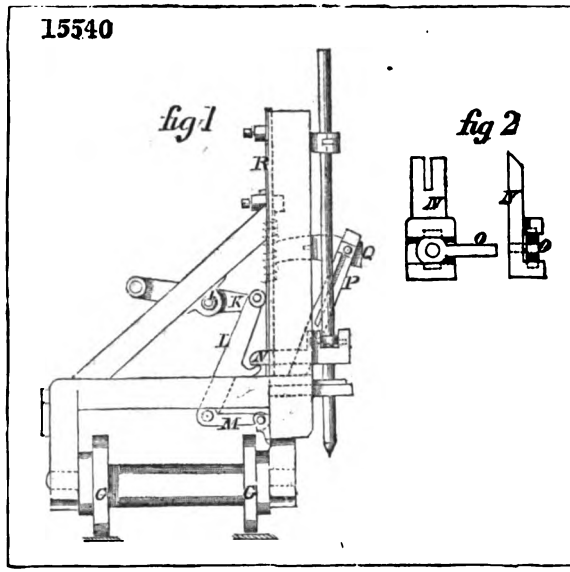

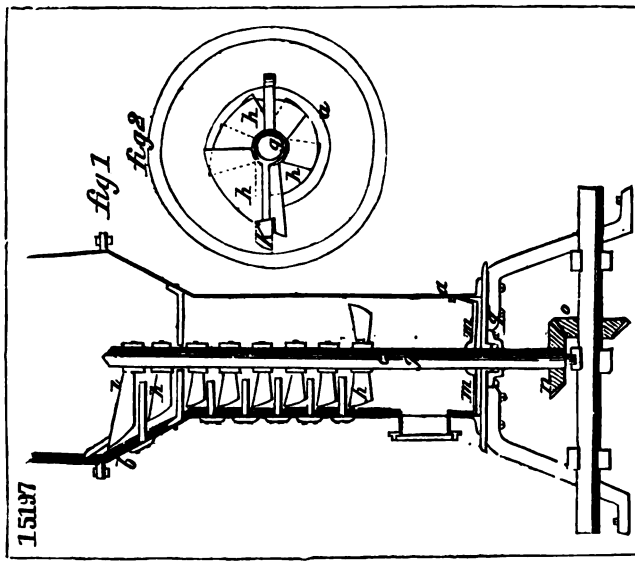

14052

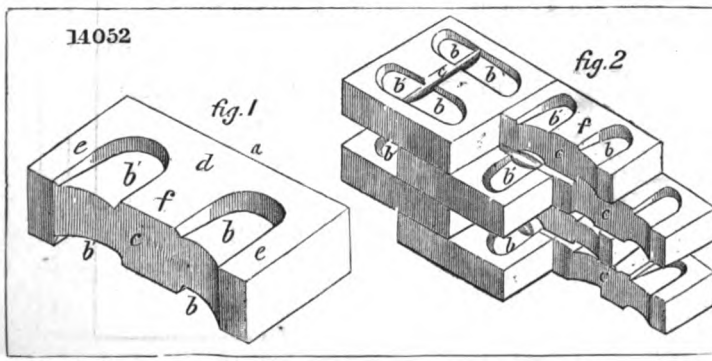
fig. 1
fig. 2
a
b
b
b

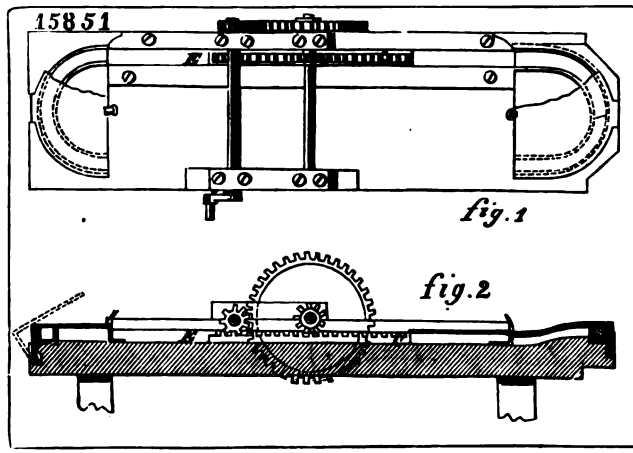

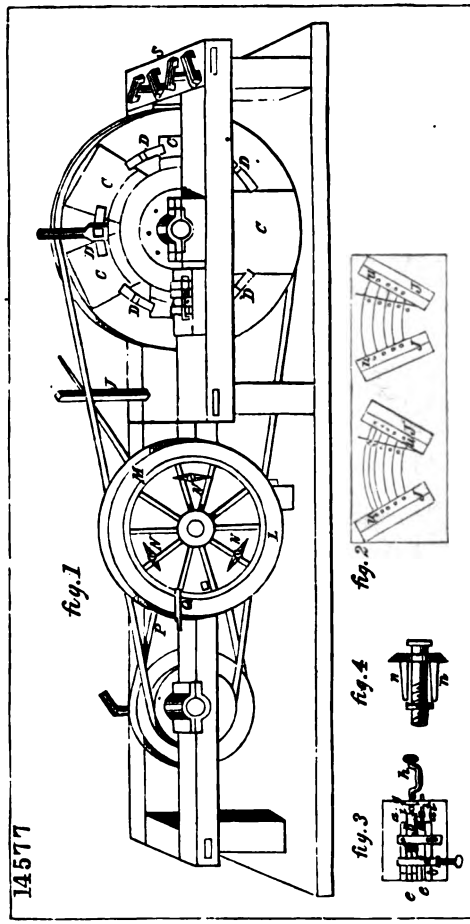

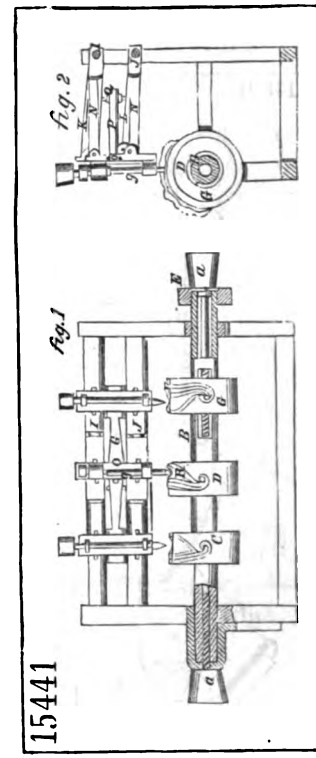

Digitized by Google

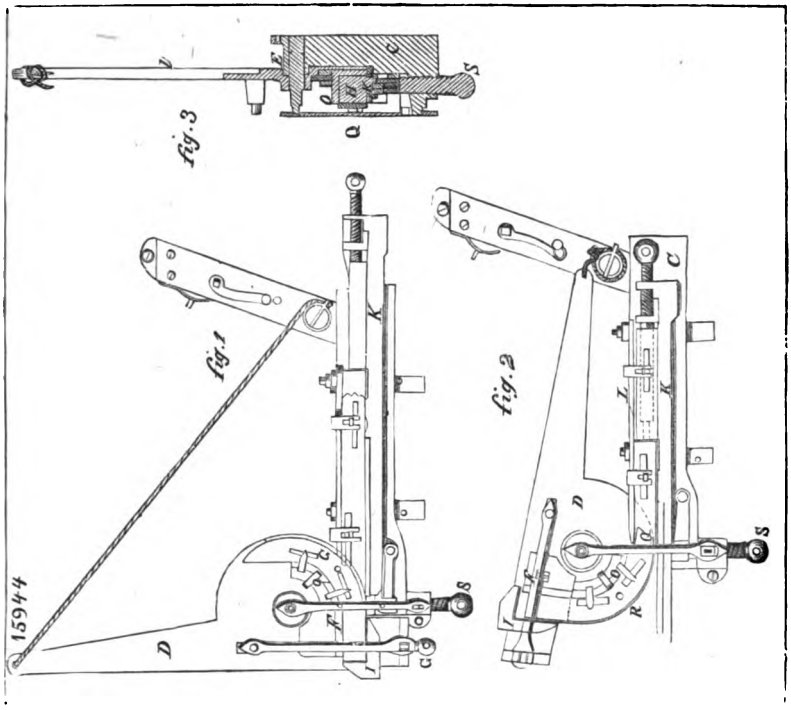

14636

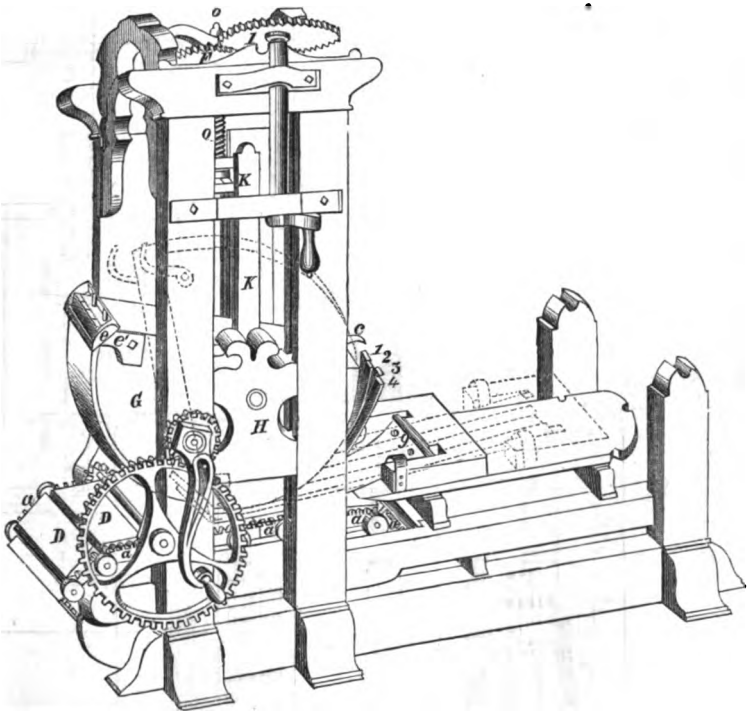

Digitized by Google

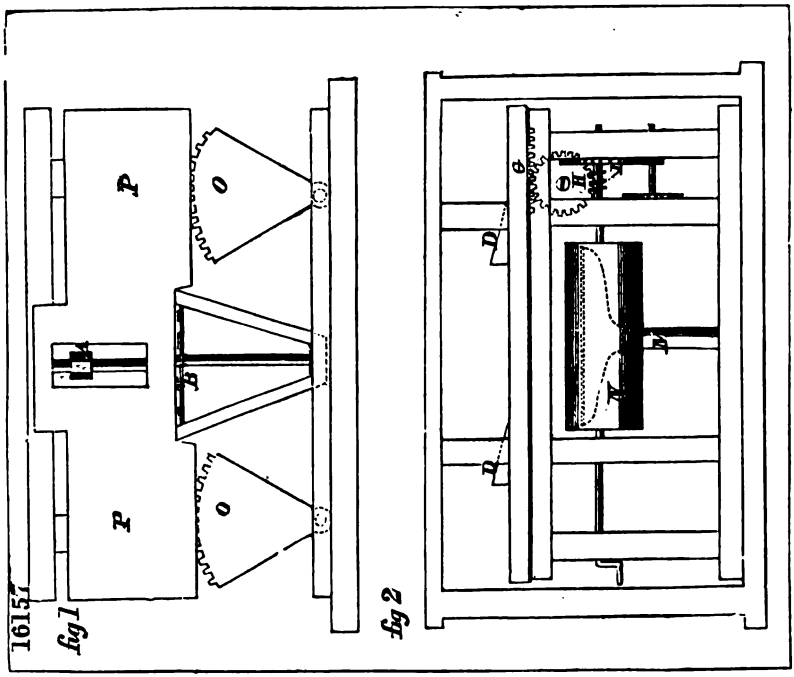
1615
fig 1
fig 2

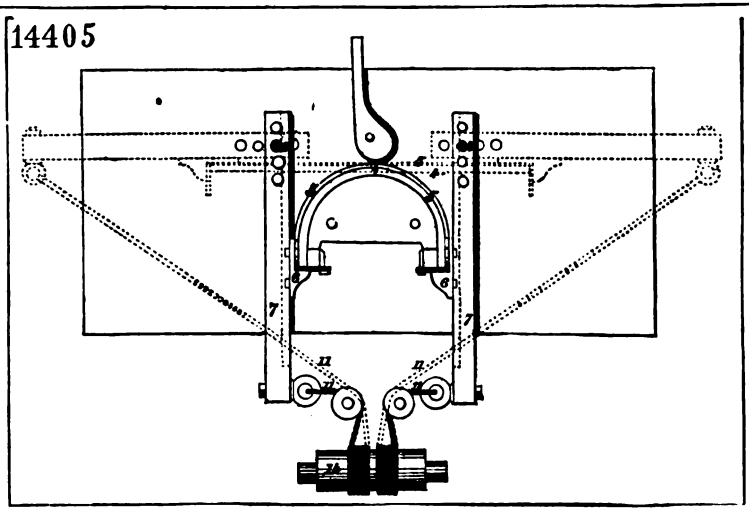
14405

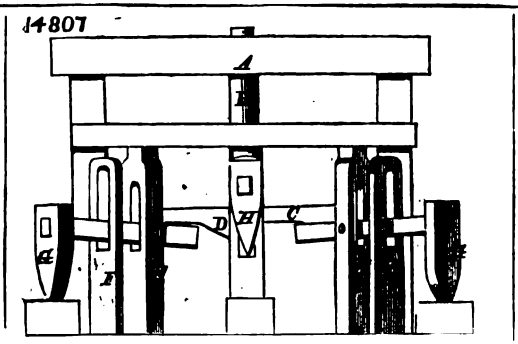
14807

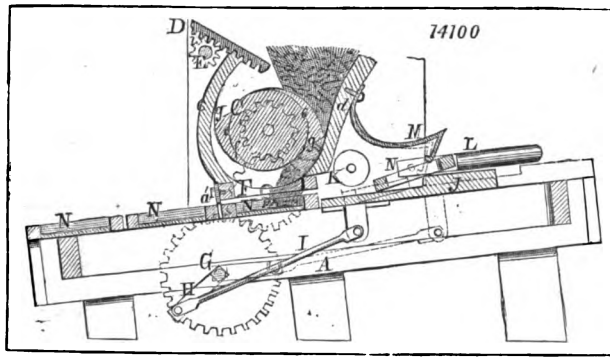

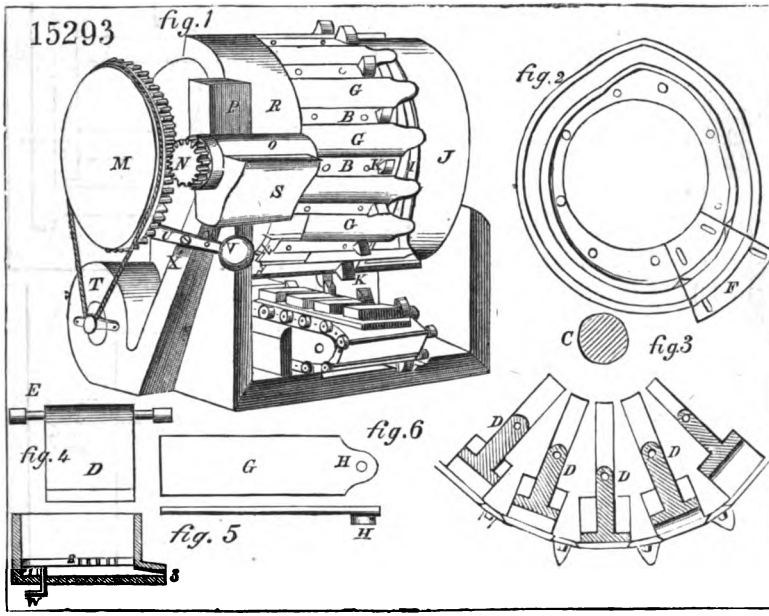

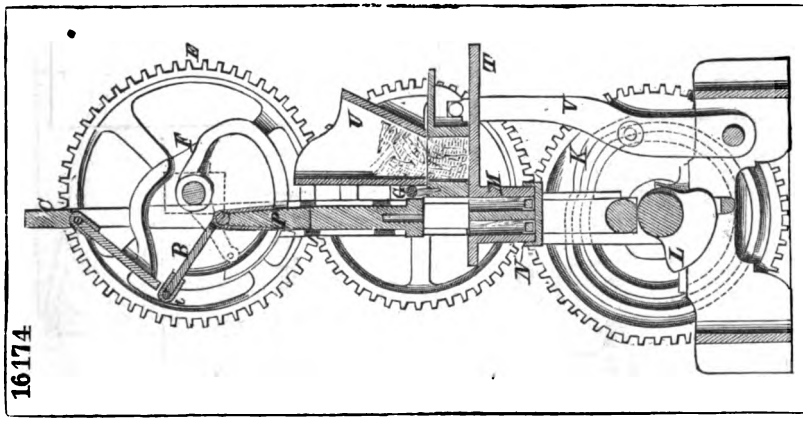

Digitized by Google

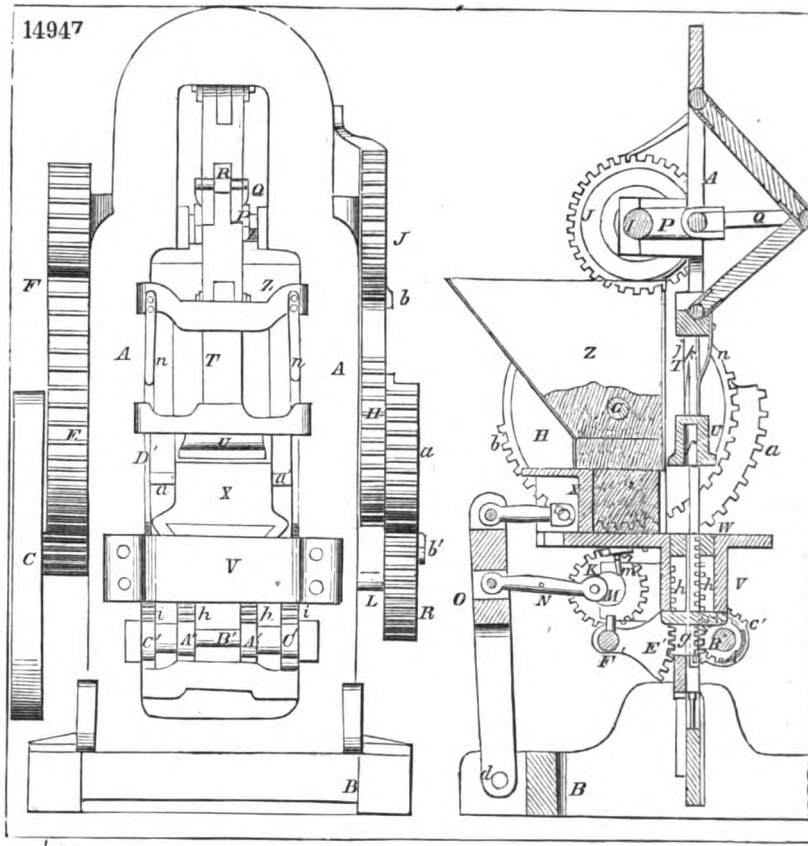

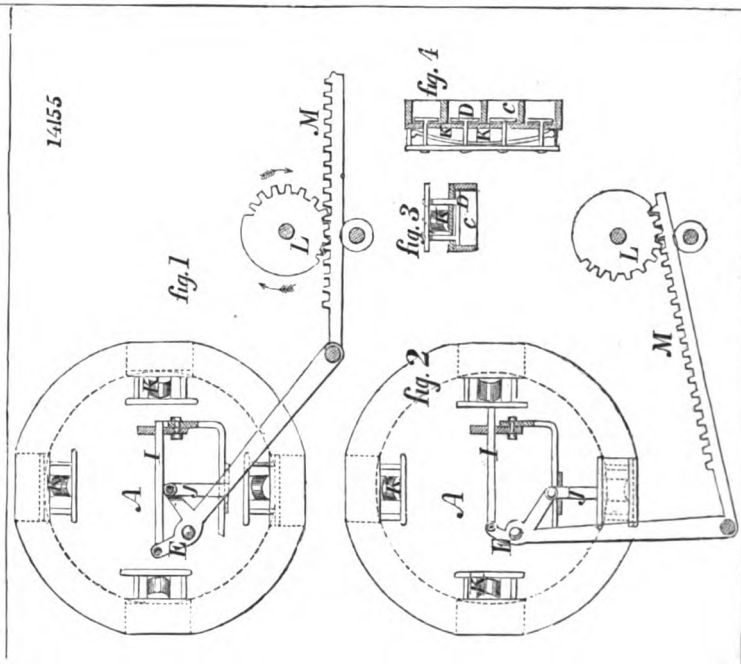

Digitized by Google

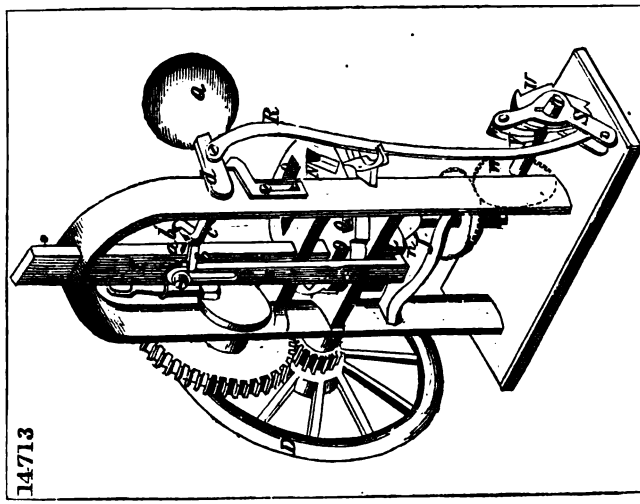

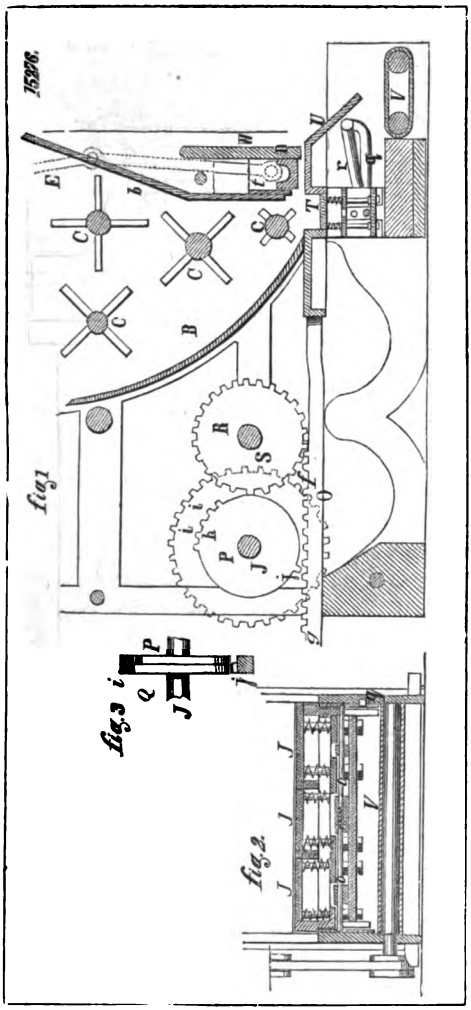

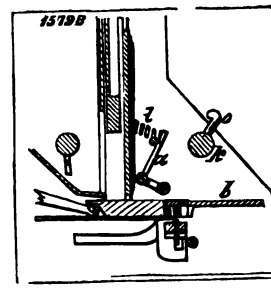

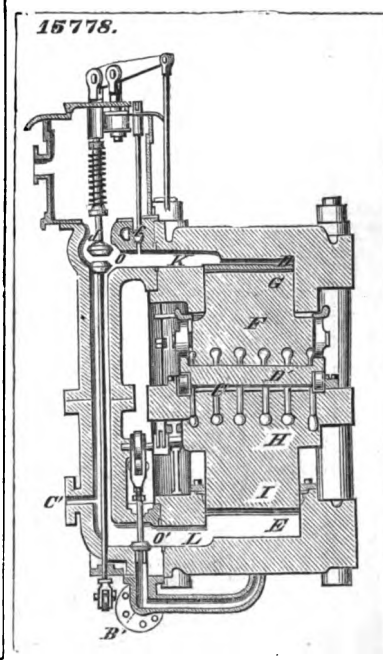

Digitized by Google

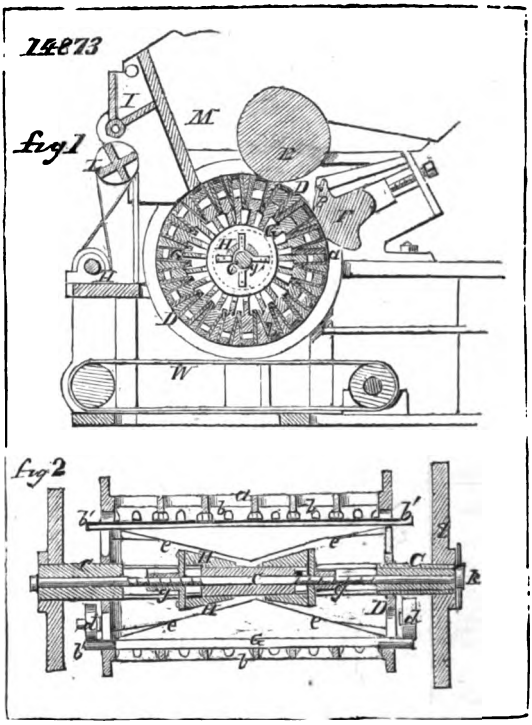

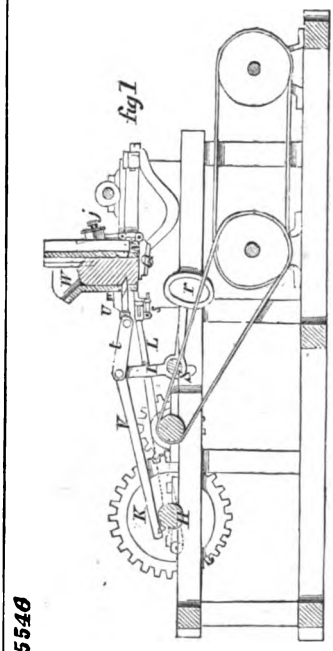

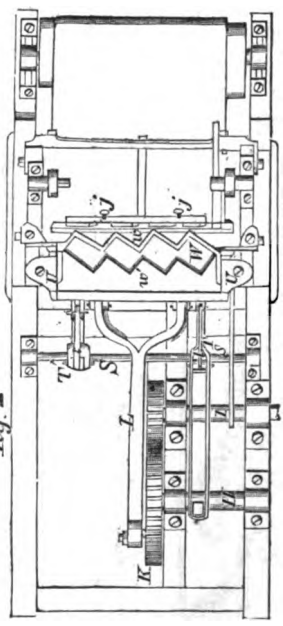

Digitized by Google

14012.

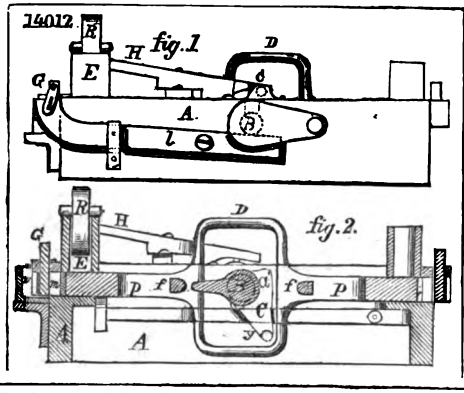

15618

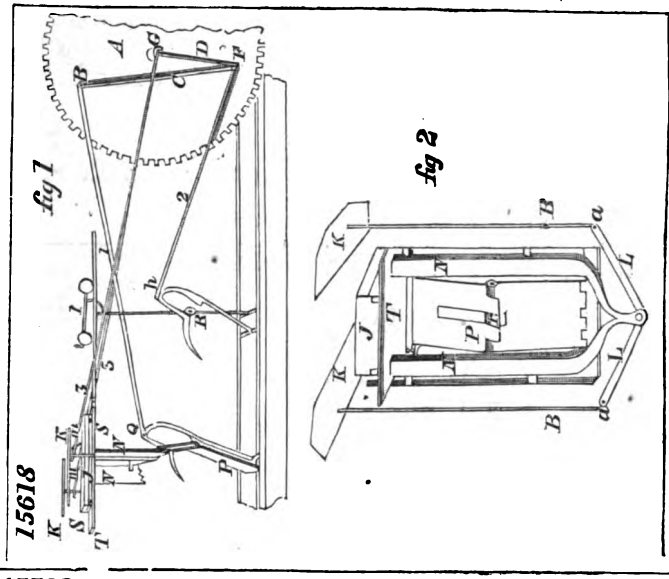

15766.

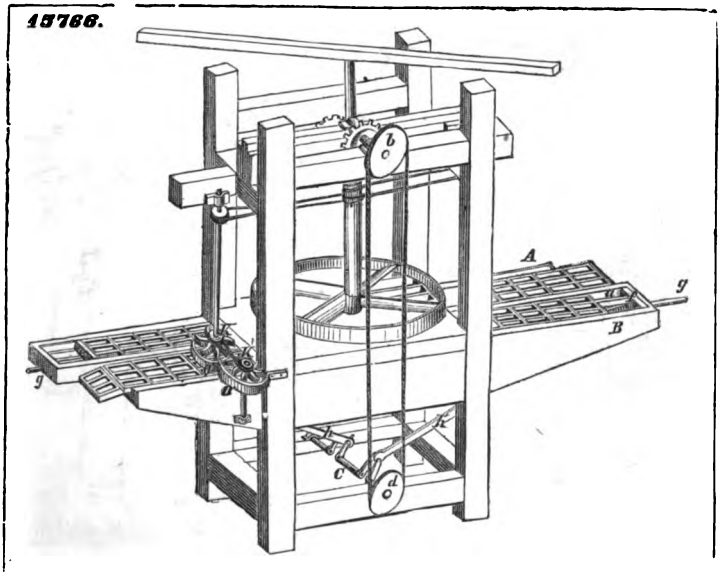

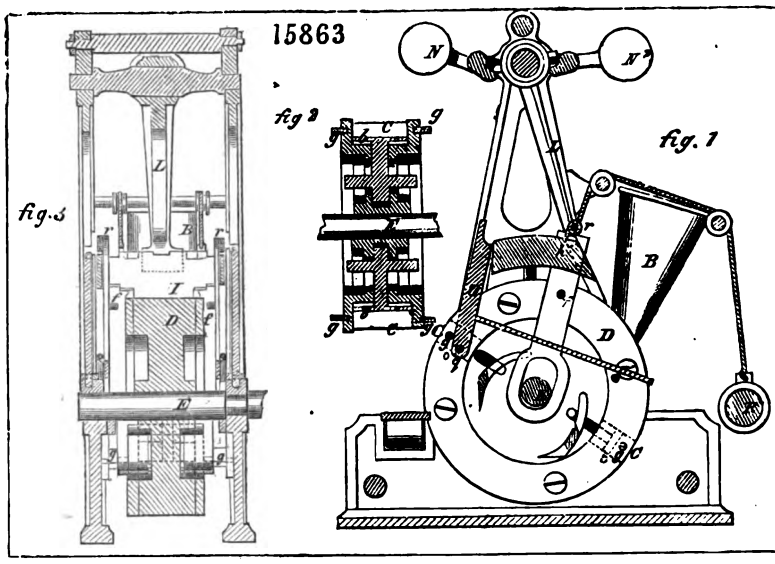
15863
fig. 3
fig 2
fig. 1

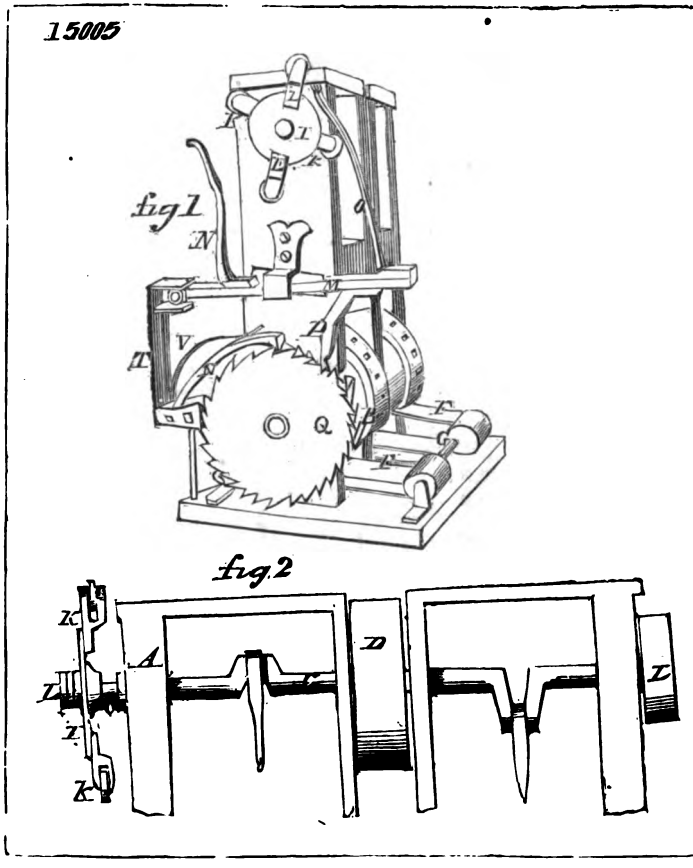
15005
fig 1
fig 2

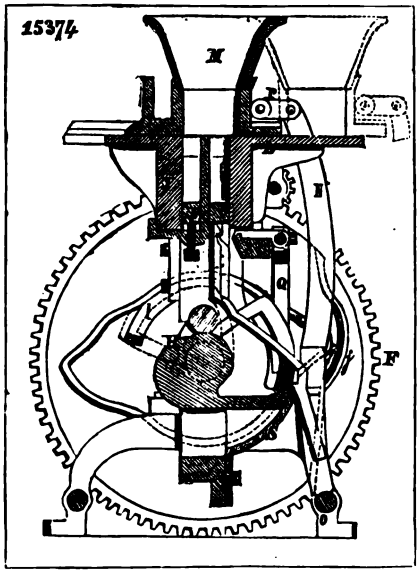

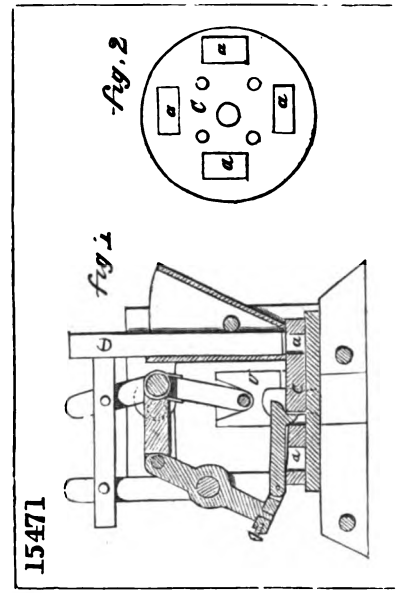

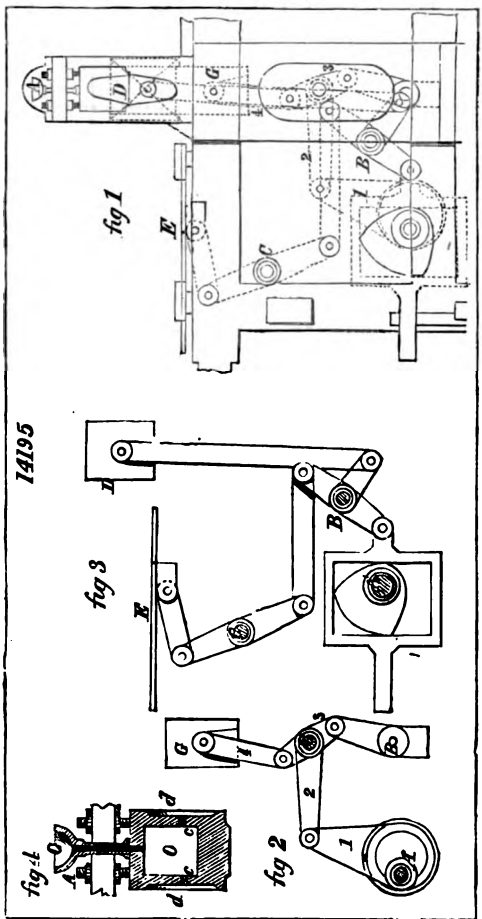

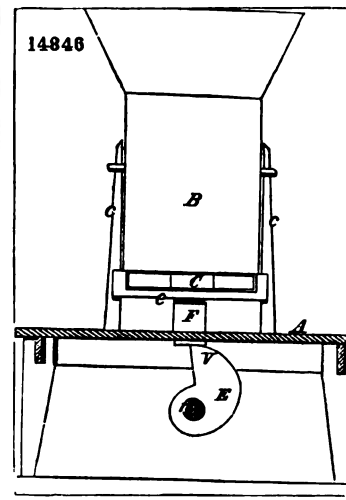

Digitized by Google

15135

fig.1

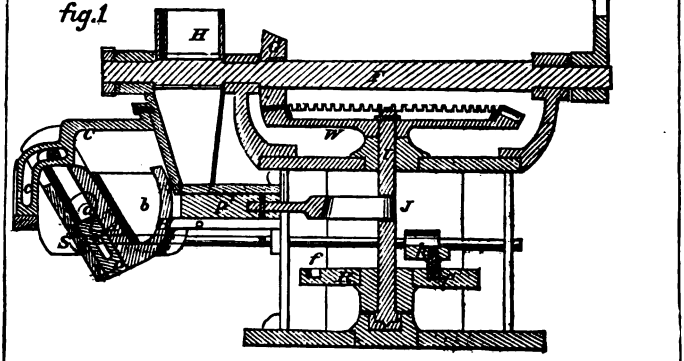

fig.2

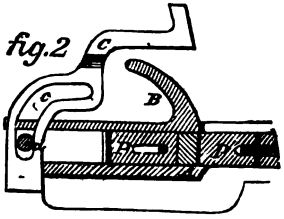

15329.

fig.1

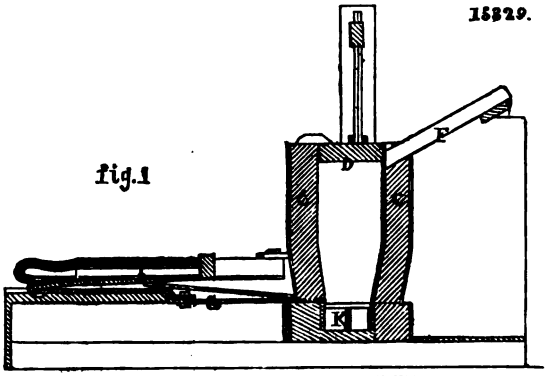

fig.2.

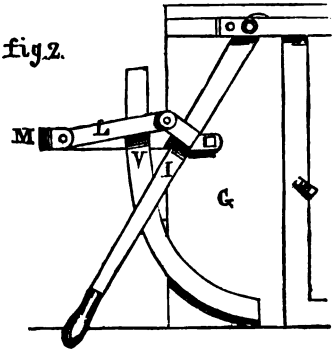

Digitized by Google

15540

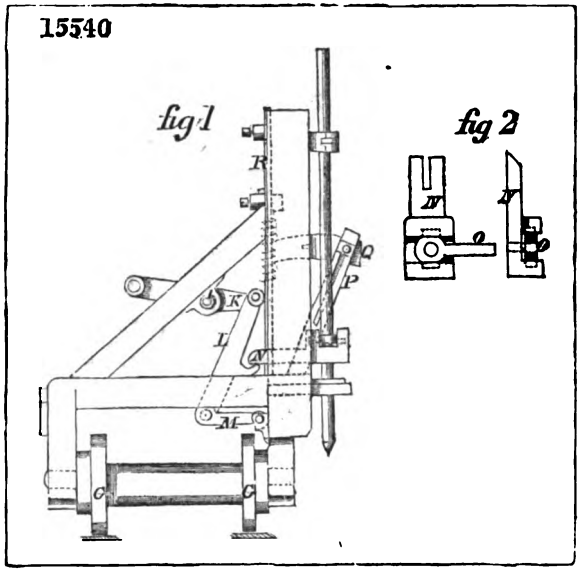

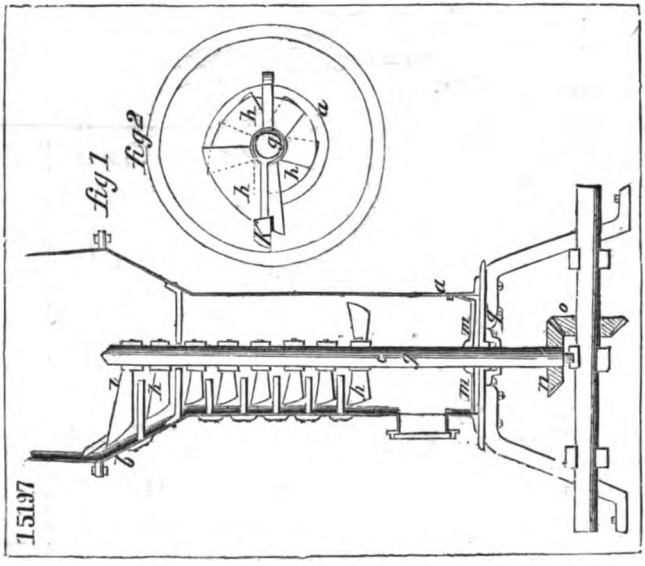

14052

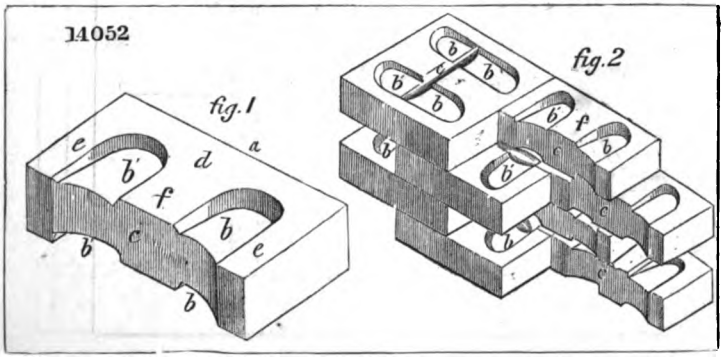

Digitized by Google

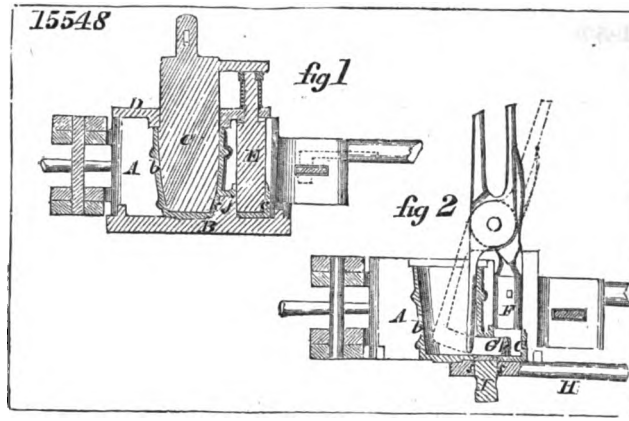

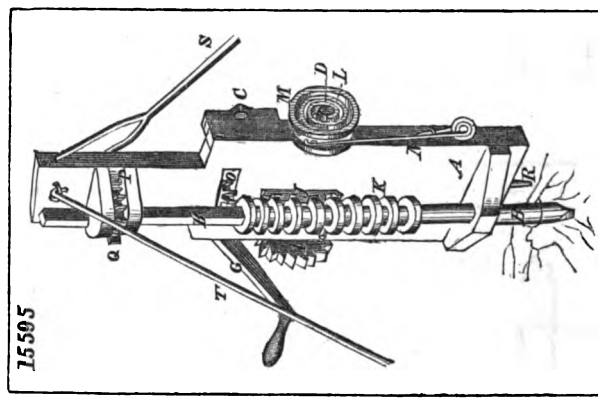

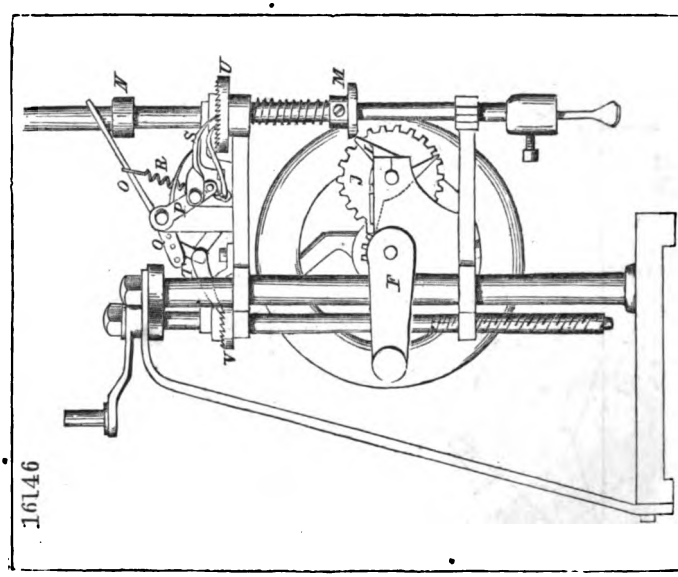

Digitized by Google

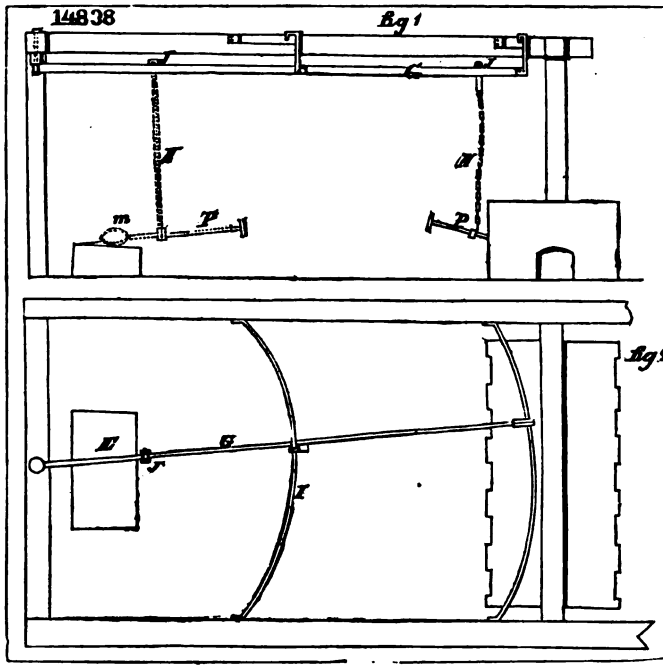

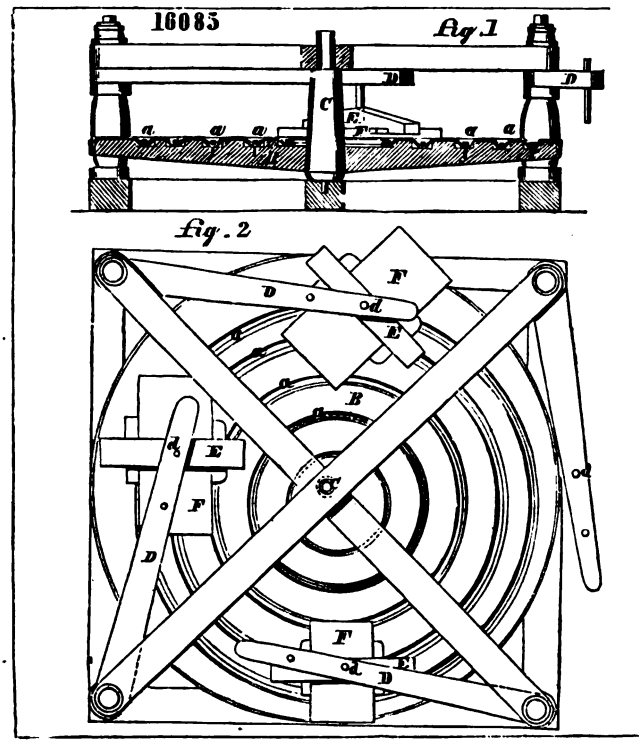

Digitized by Google

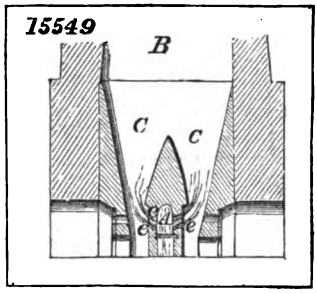

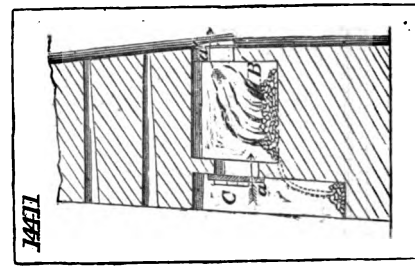

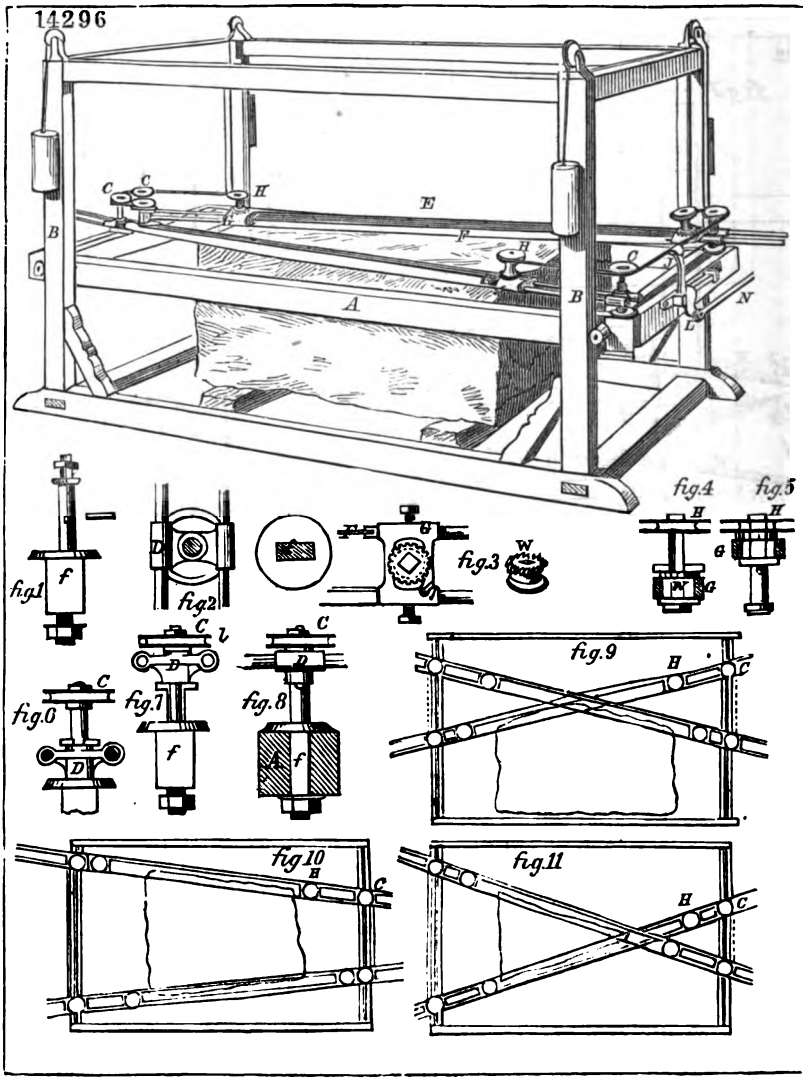

Digitized by Google

14658

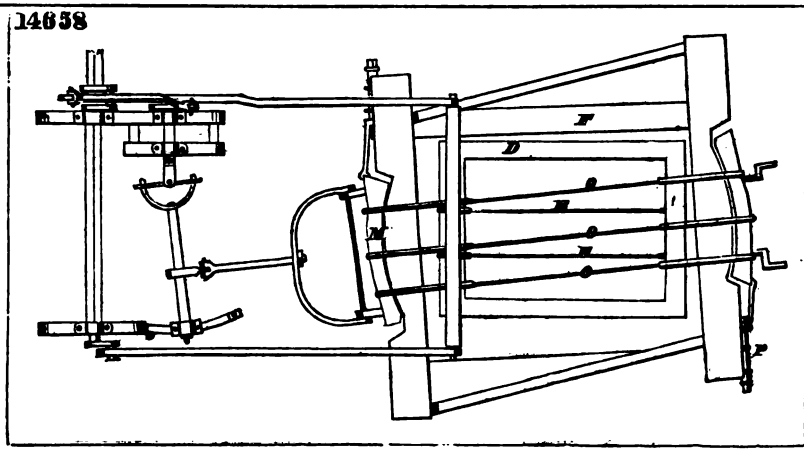

14632.

fig. 1

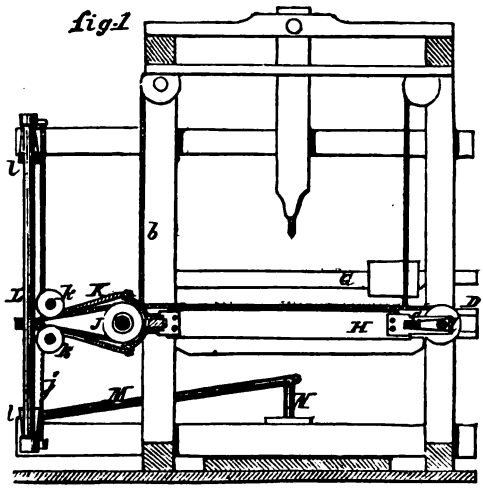

fig. 2

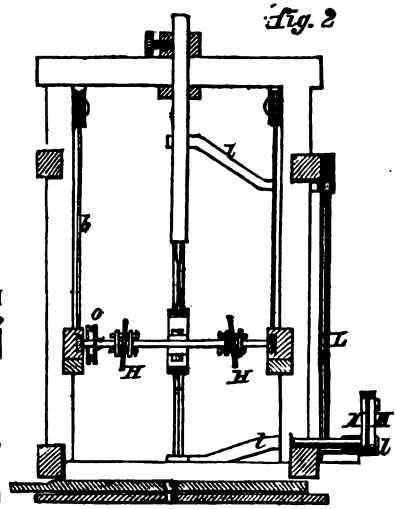

fig. 3

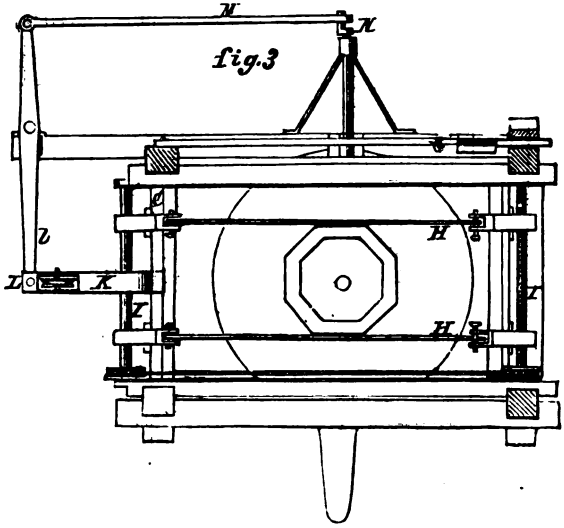

Digitized by Google

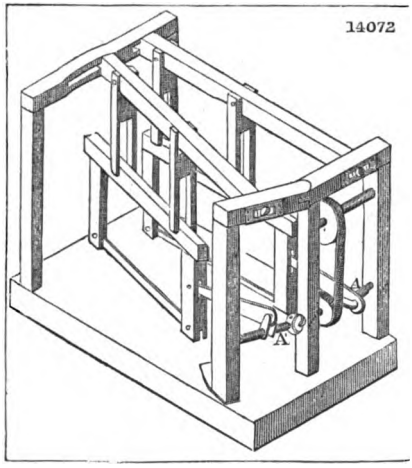

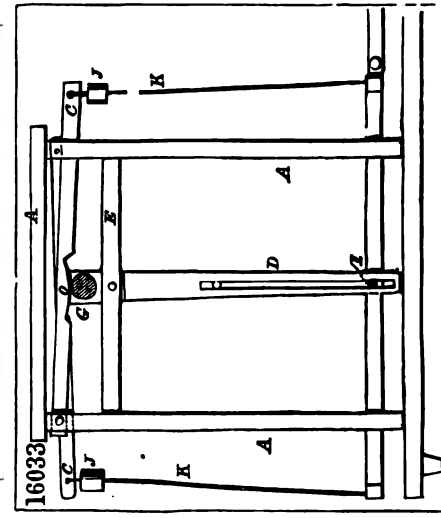

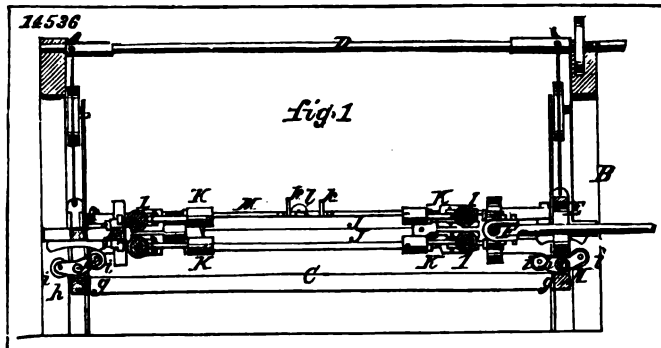

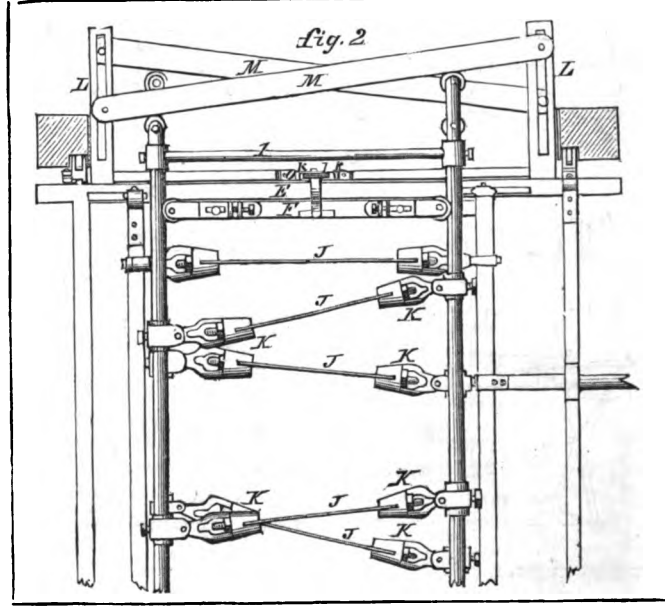

Digitized by Google

14471

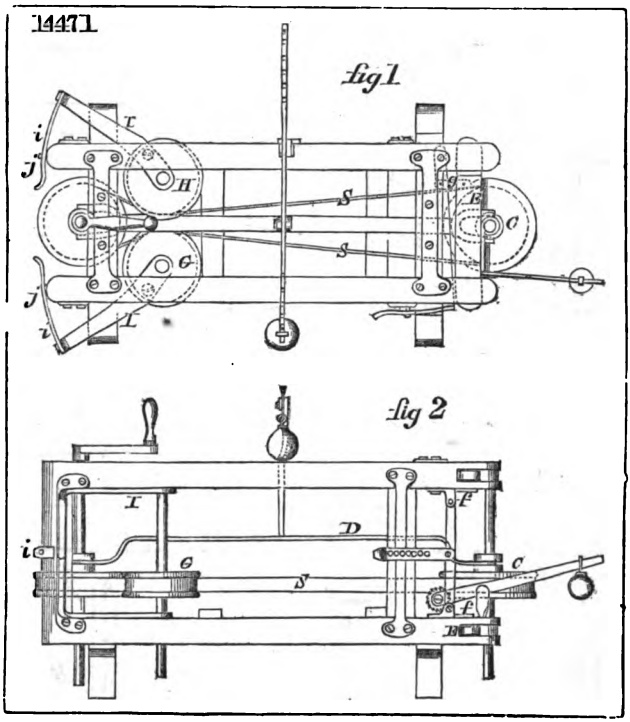

14729

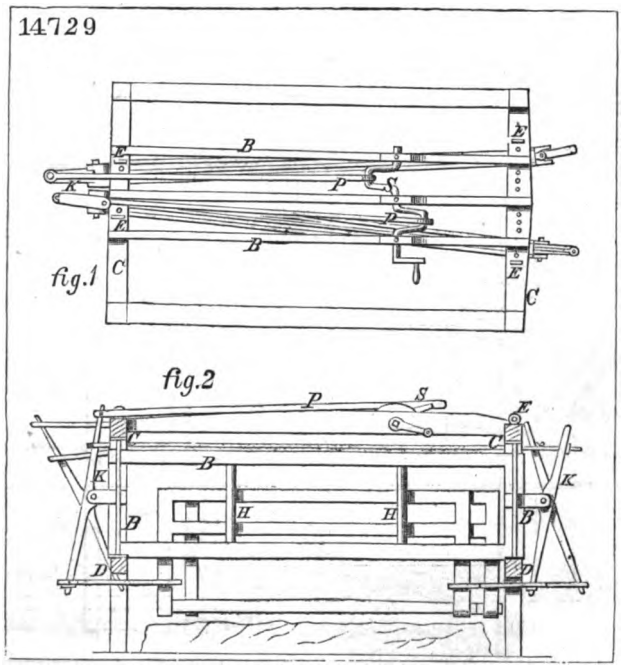

Digitized by Google

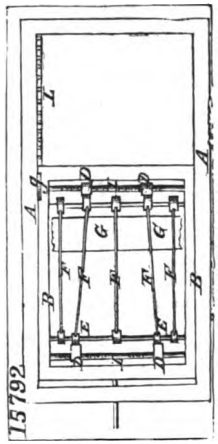

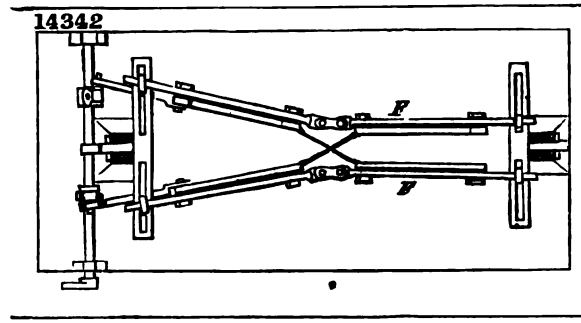

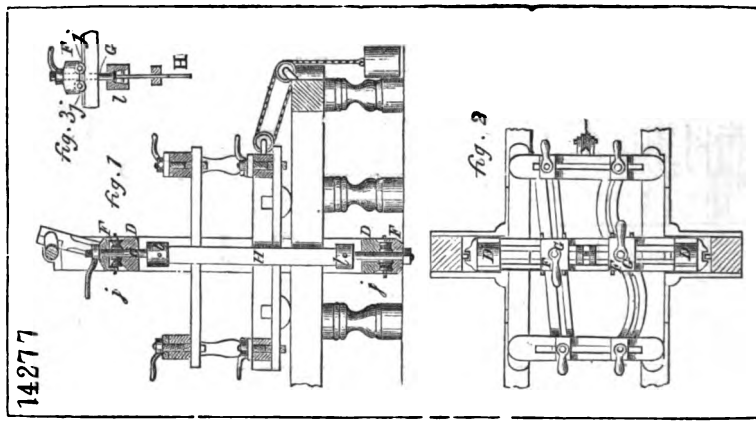

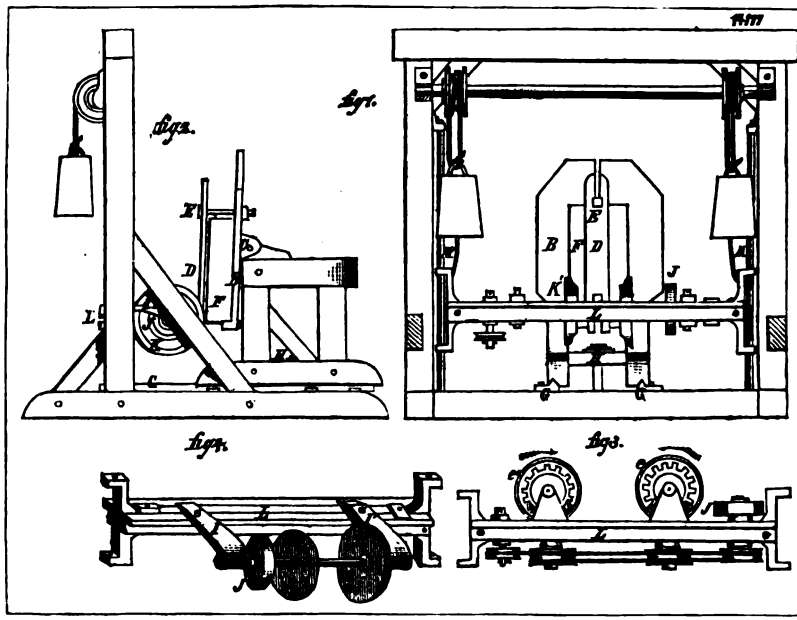

Digitized by Google

15814 fig. 1

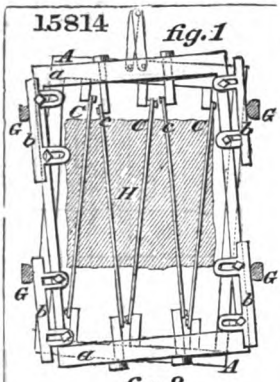

fig. 2

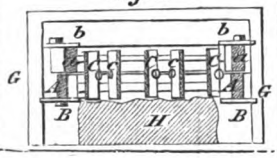

14688

fig 2

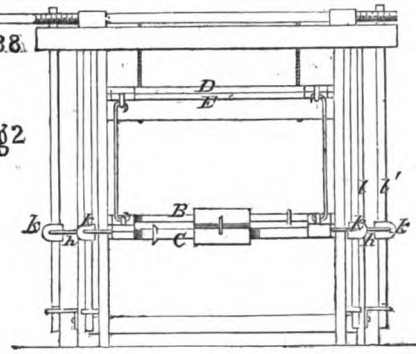

fig 3

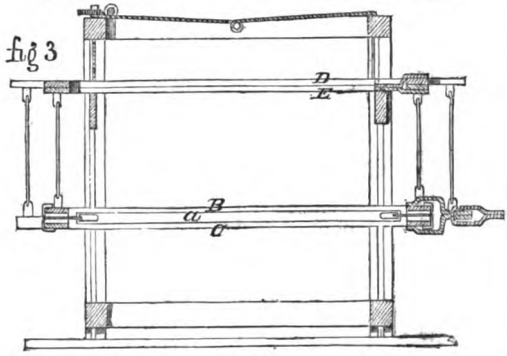

fig 1

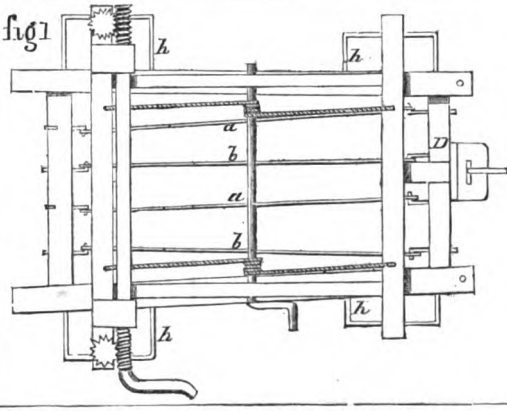

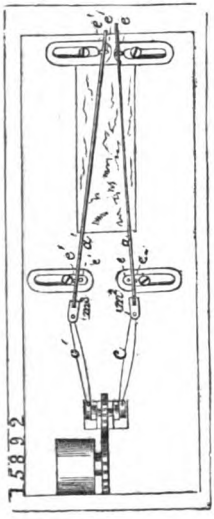

15115

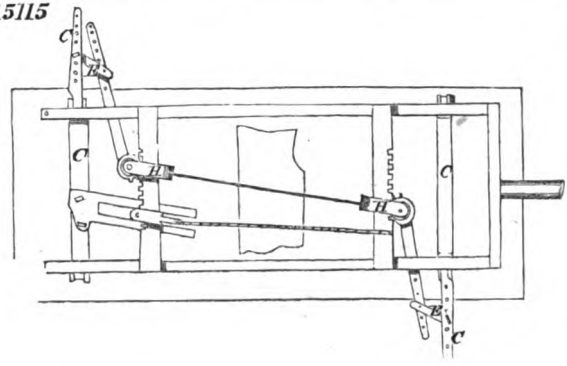

Digitized by Google

15242

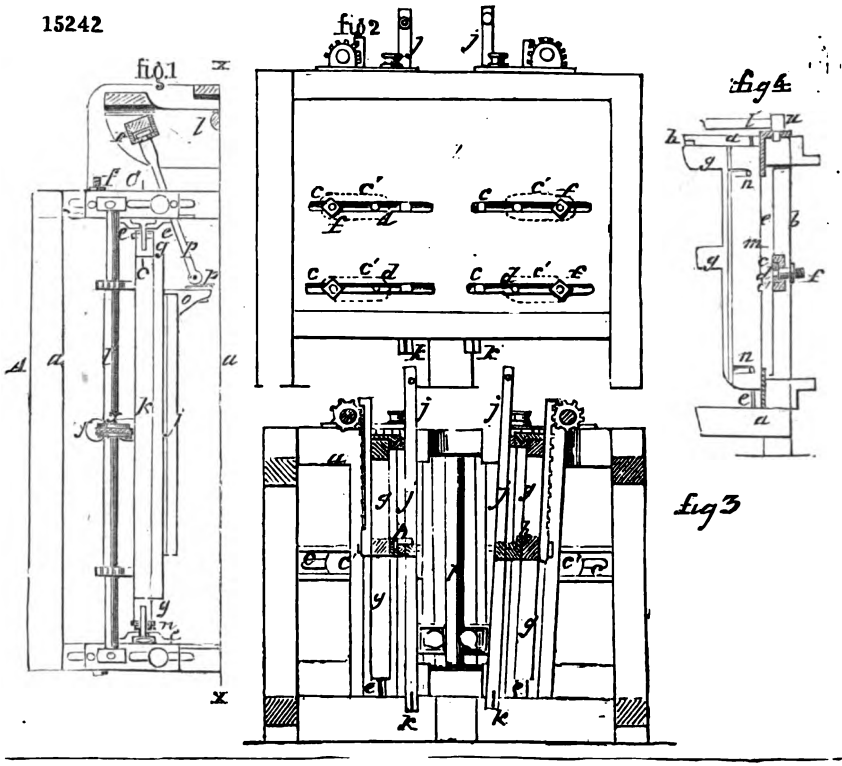

14836

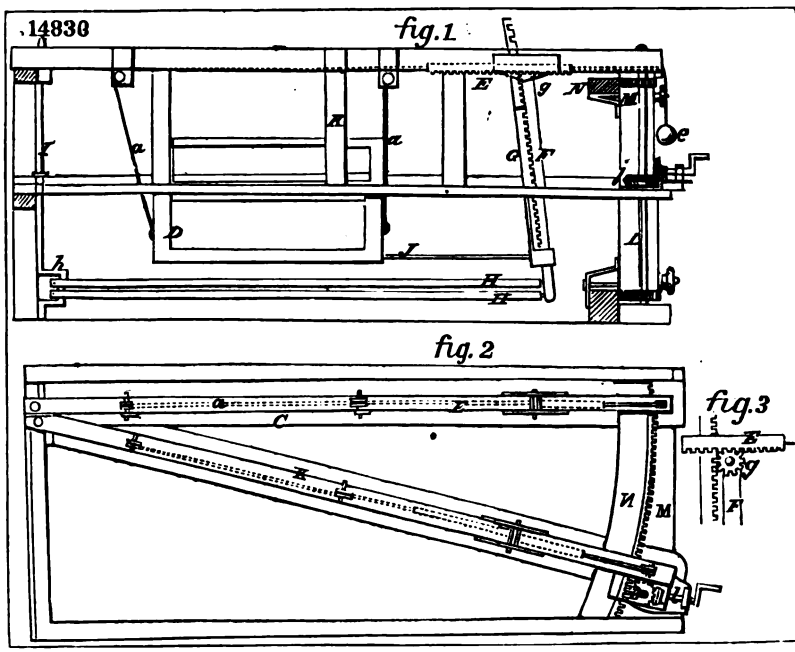

Digitized by Google

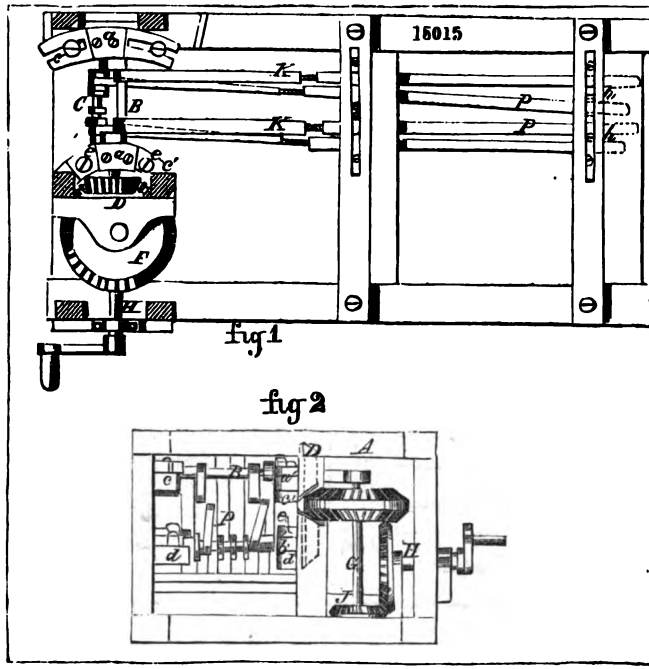

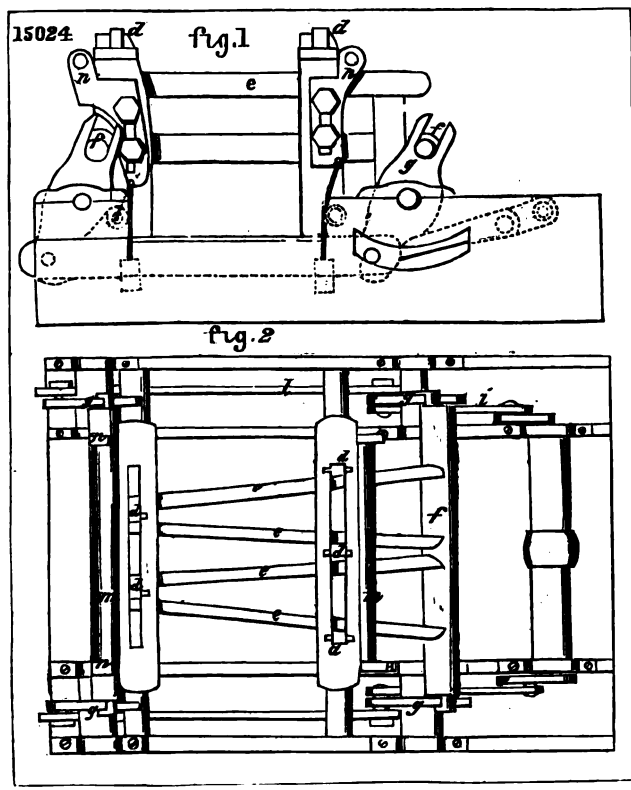

Digitized by Google

15328

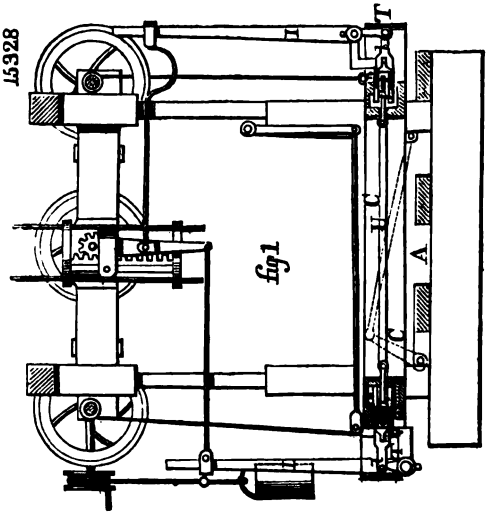

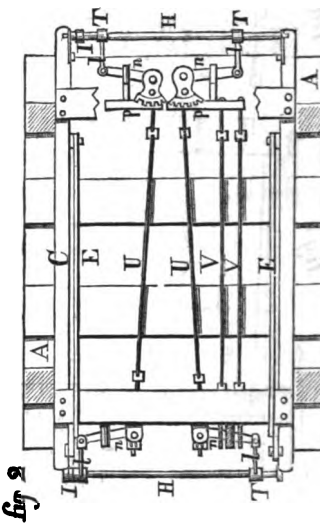

14995

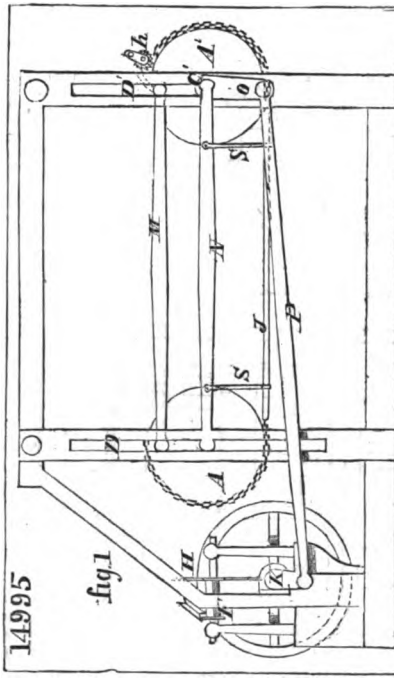

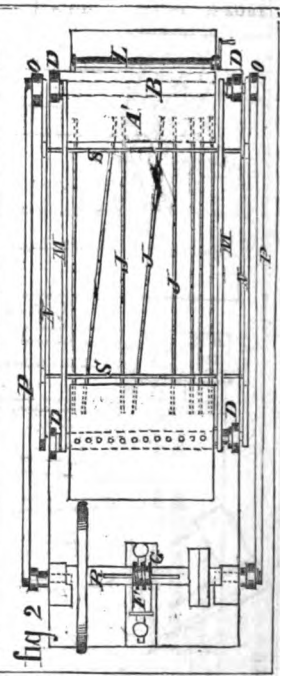

Digitized by Google

15419

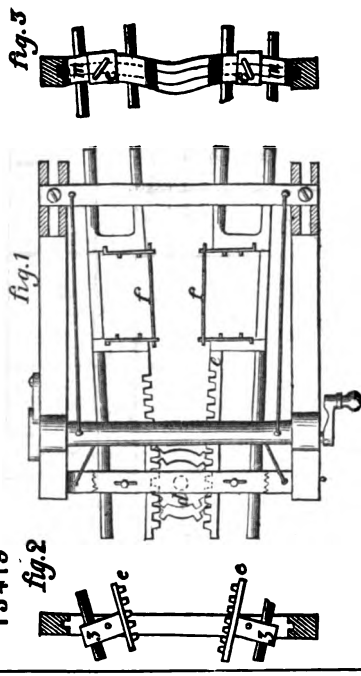

15713

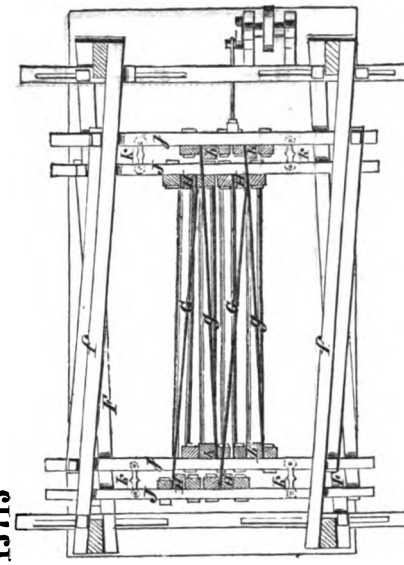

16086

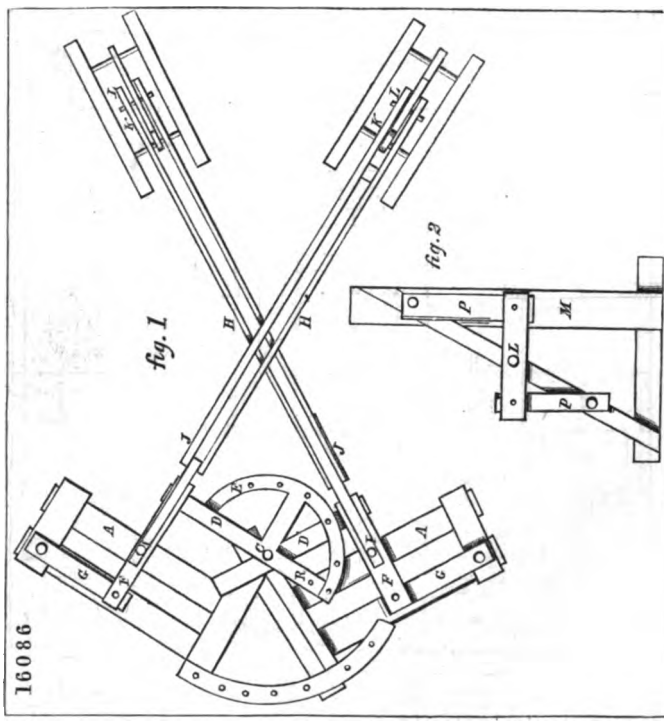

Digitized by Google

14823

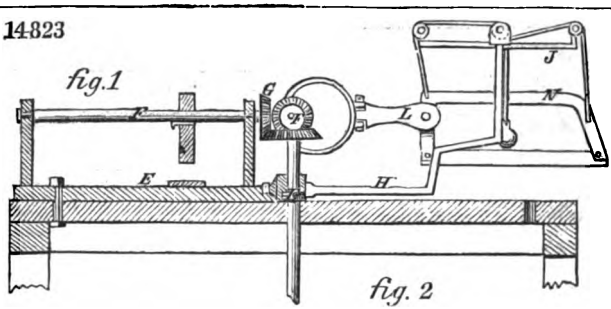

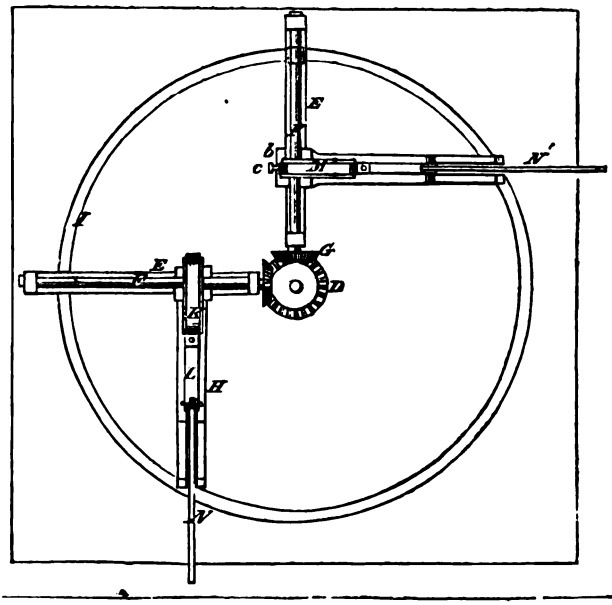

15383

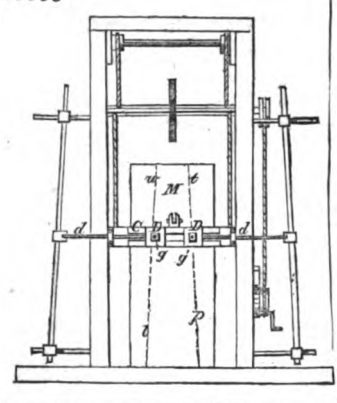

15410

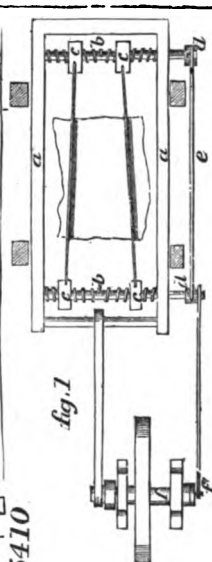

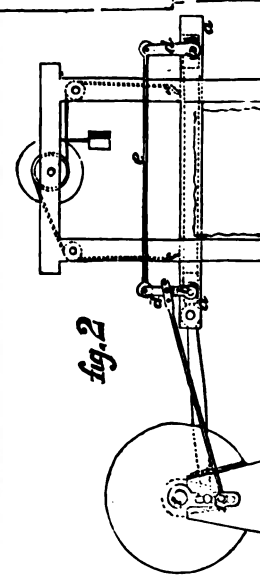

Digitized by Google

14656

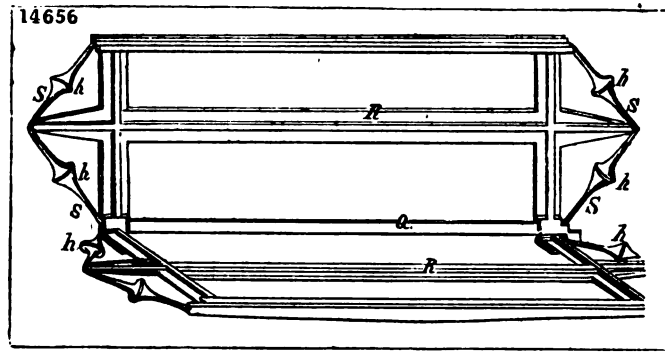

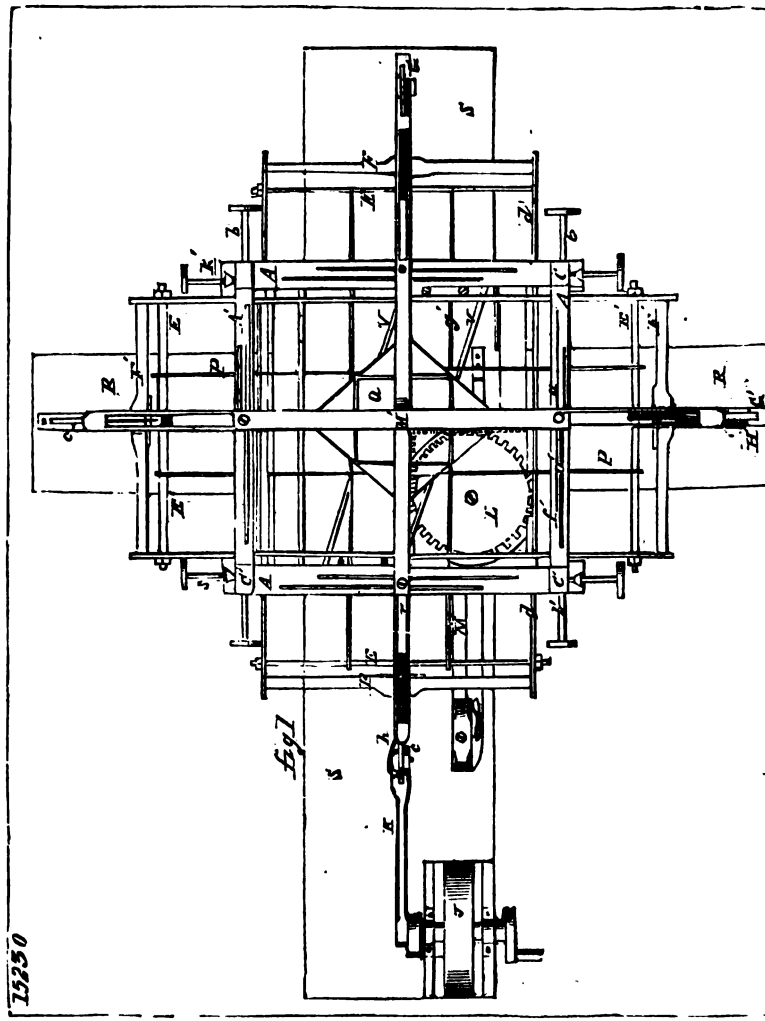

15250

Digitized by Google

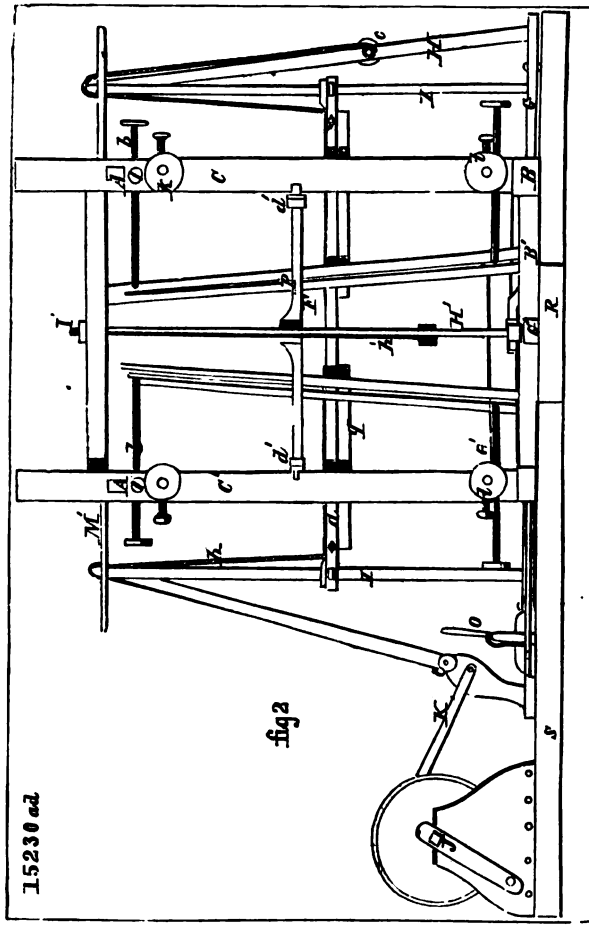

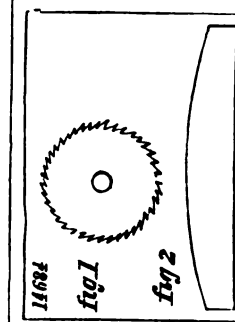

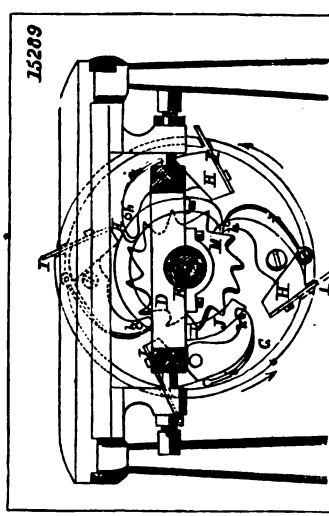

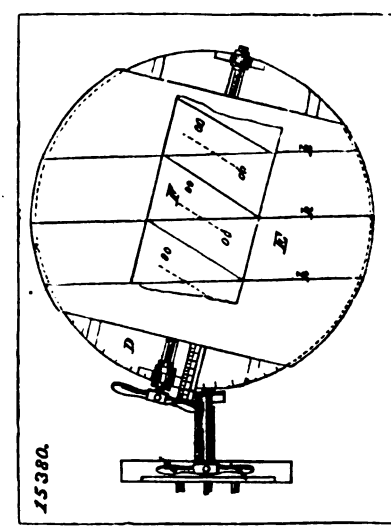

Digitized by Google

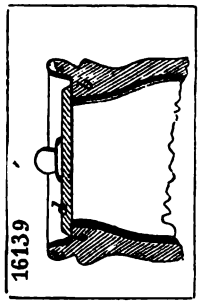

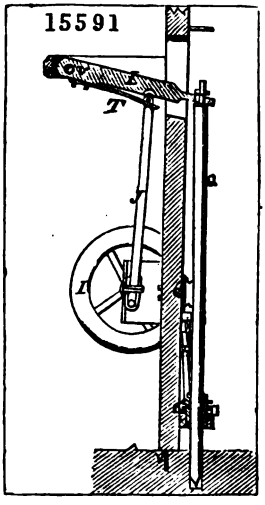

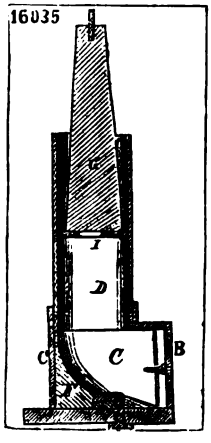

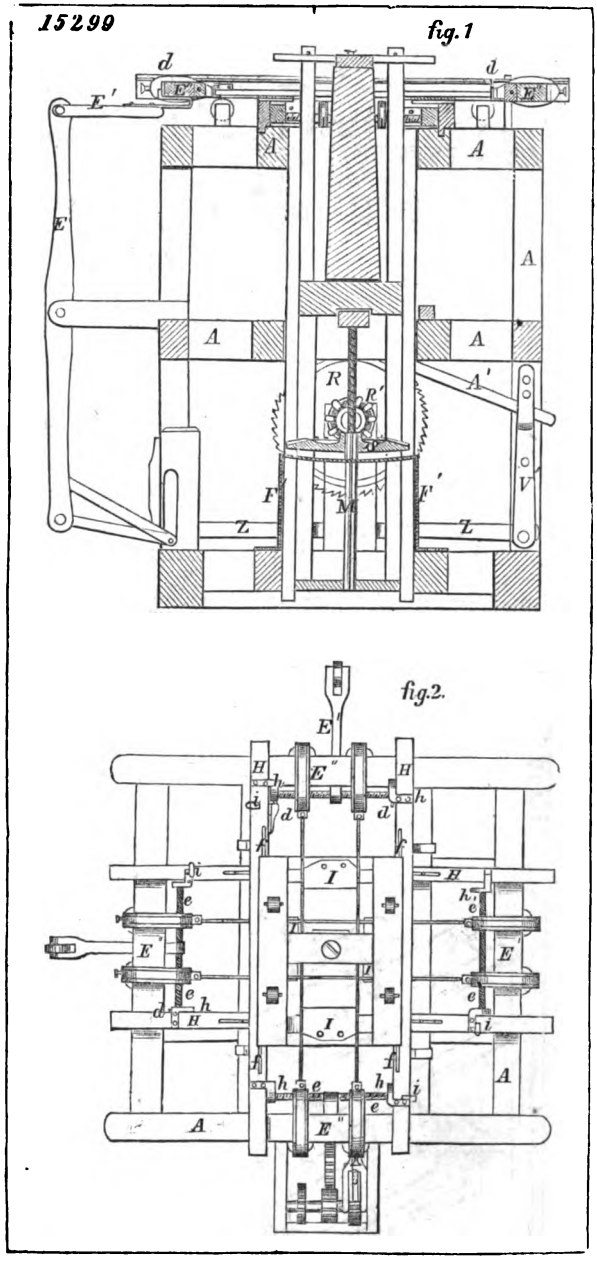

Digitized by Google

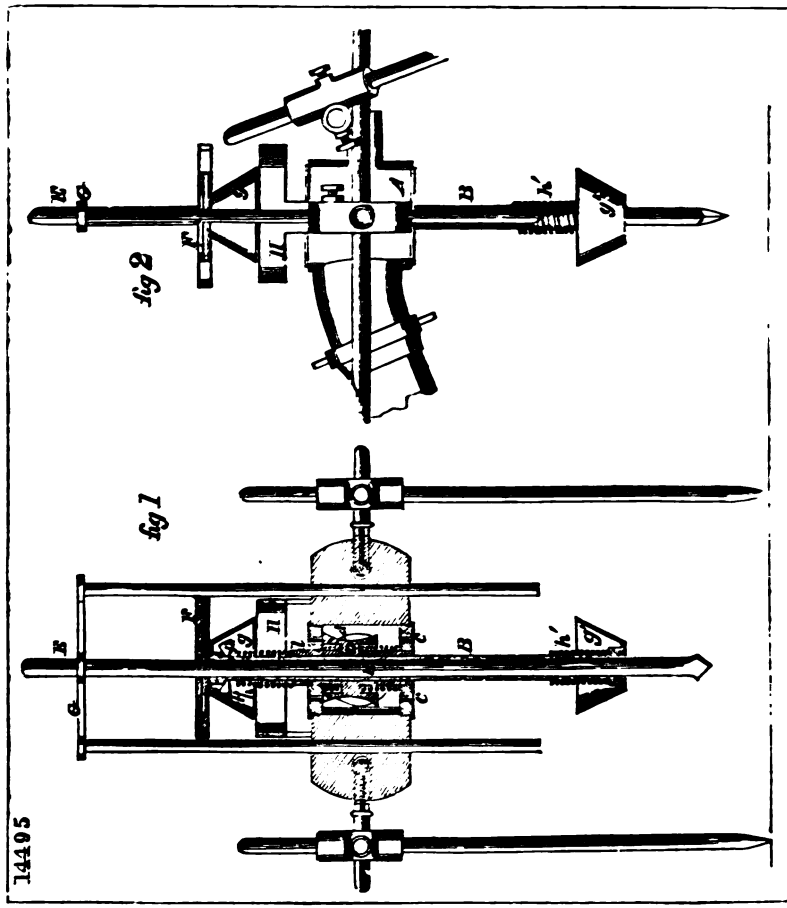

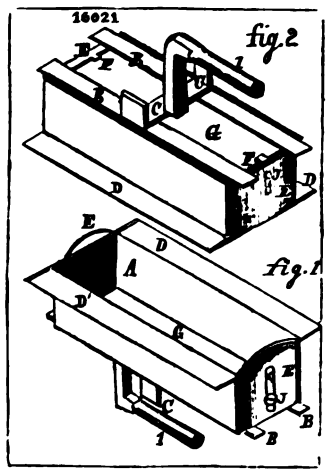

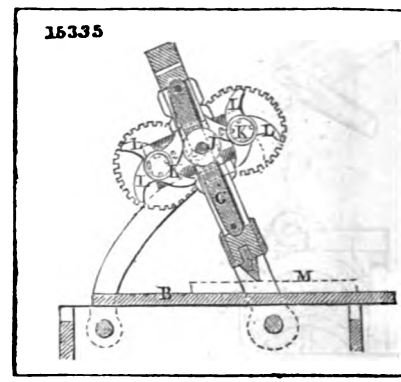

Digitized by Google

14619

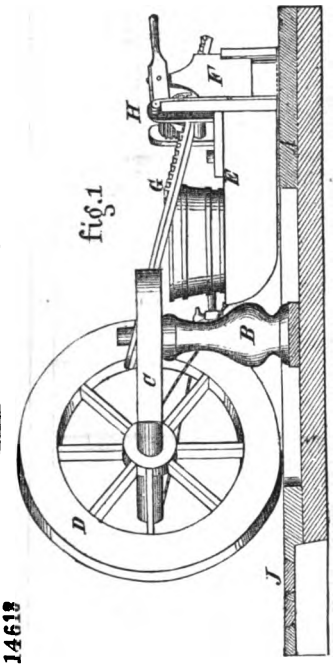

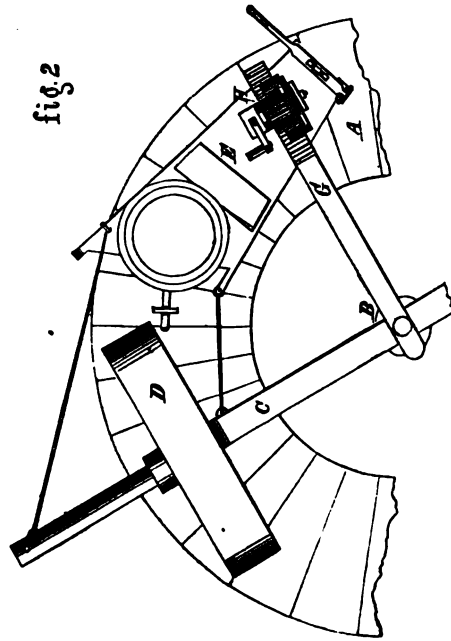

15847

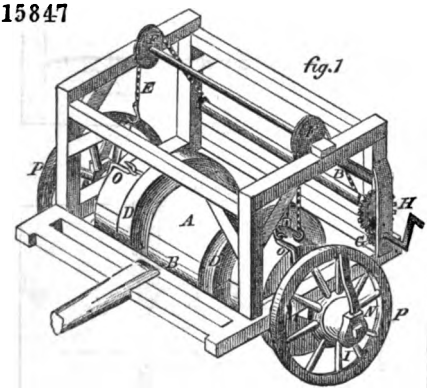

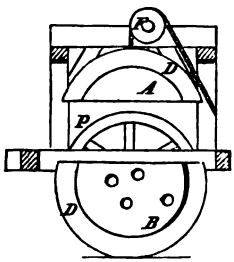

14537

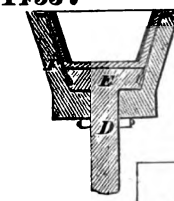

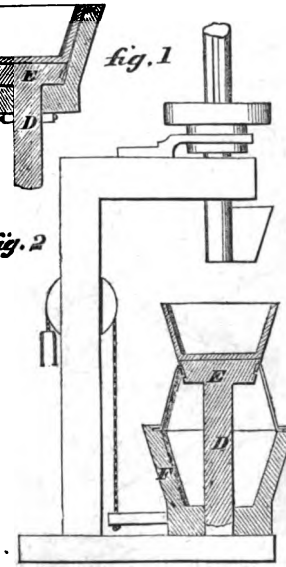

Digitized by Google

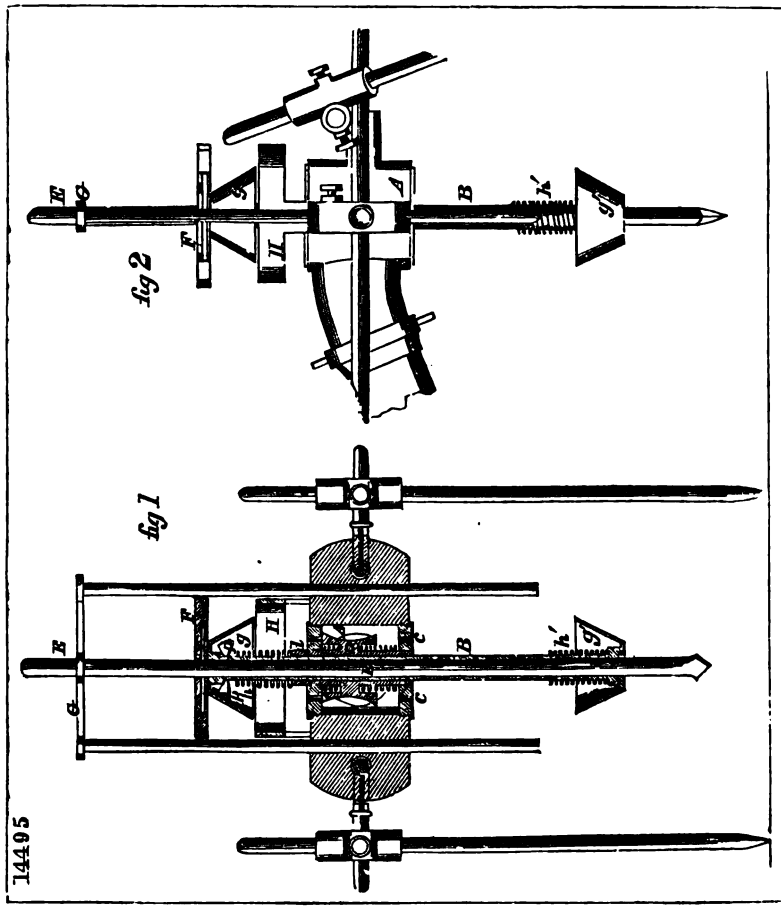

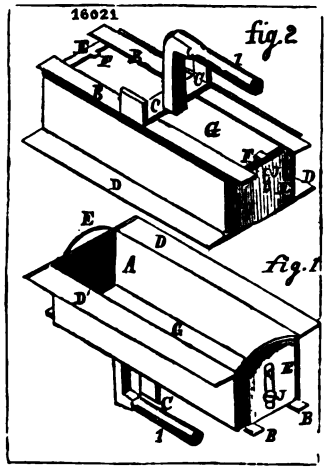

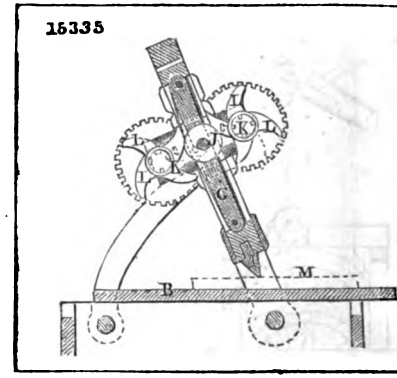

Digitized by Google

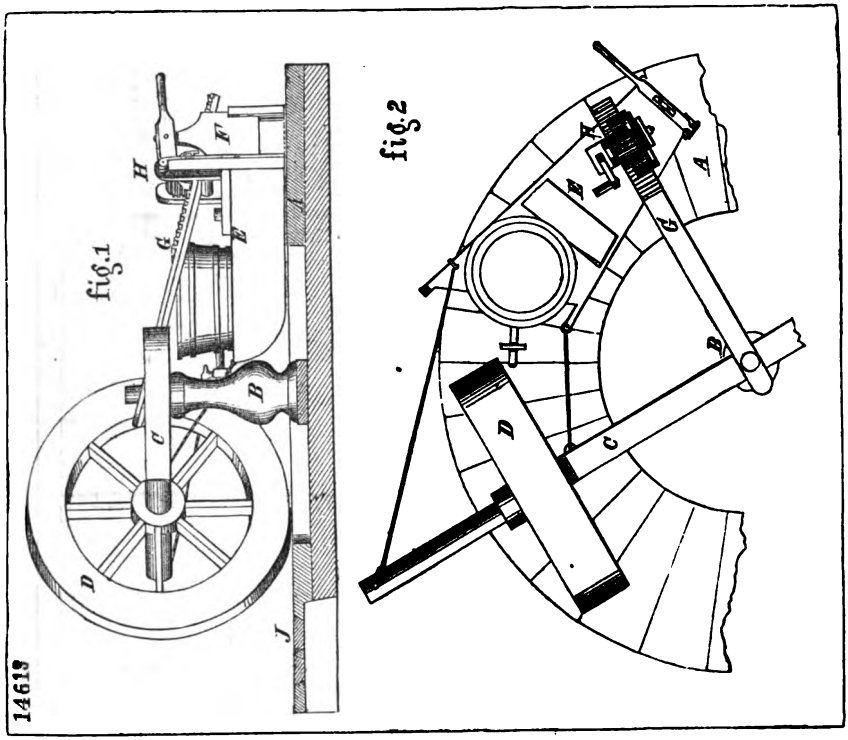

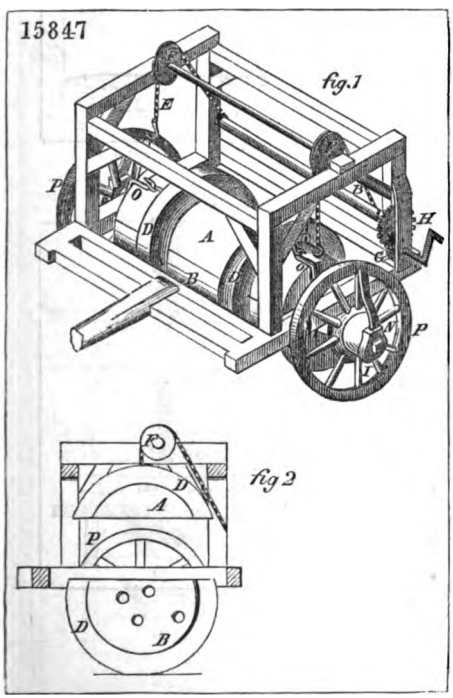

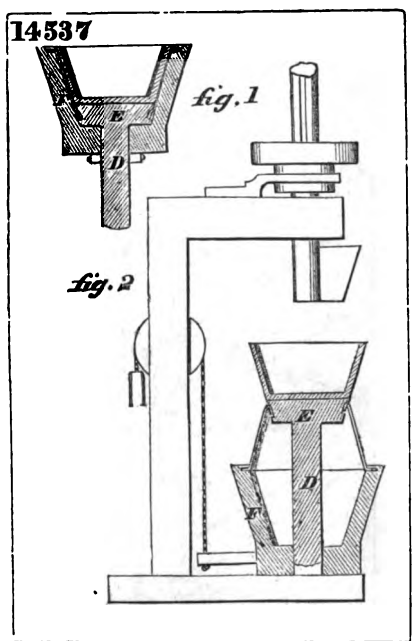

Digitized by Google

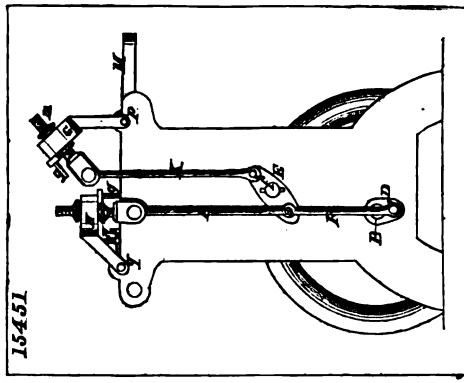

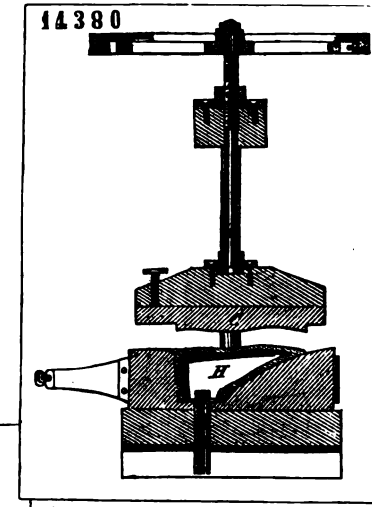

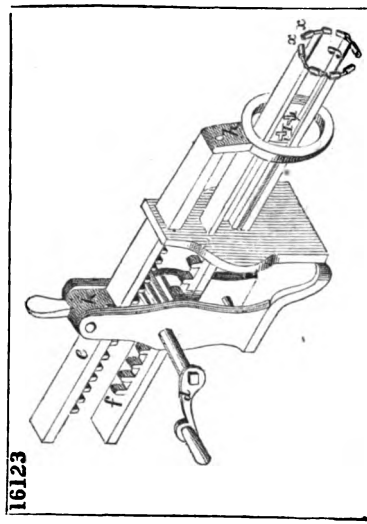

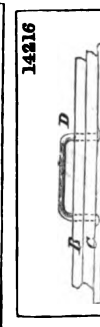

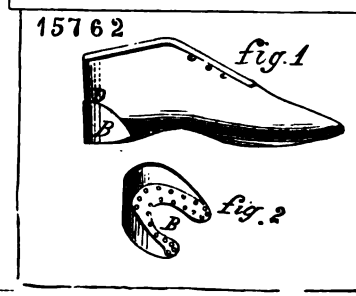

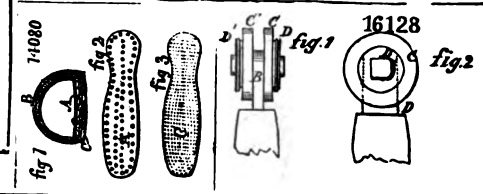

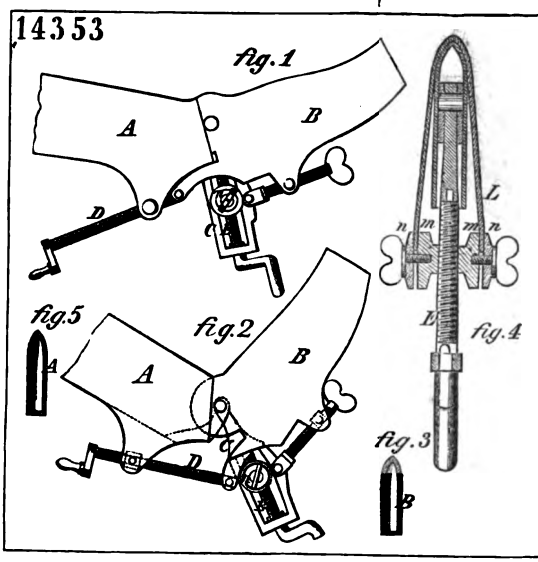

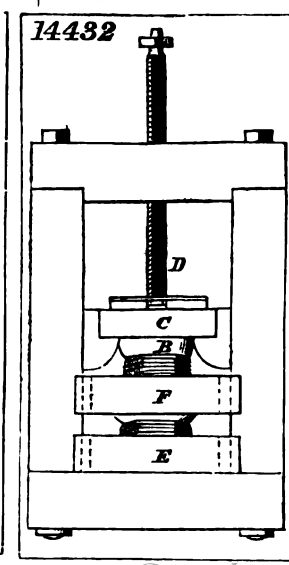

Digitized by Google

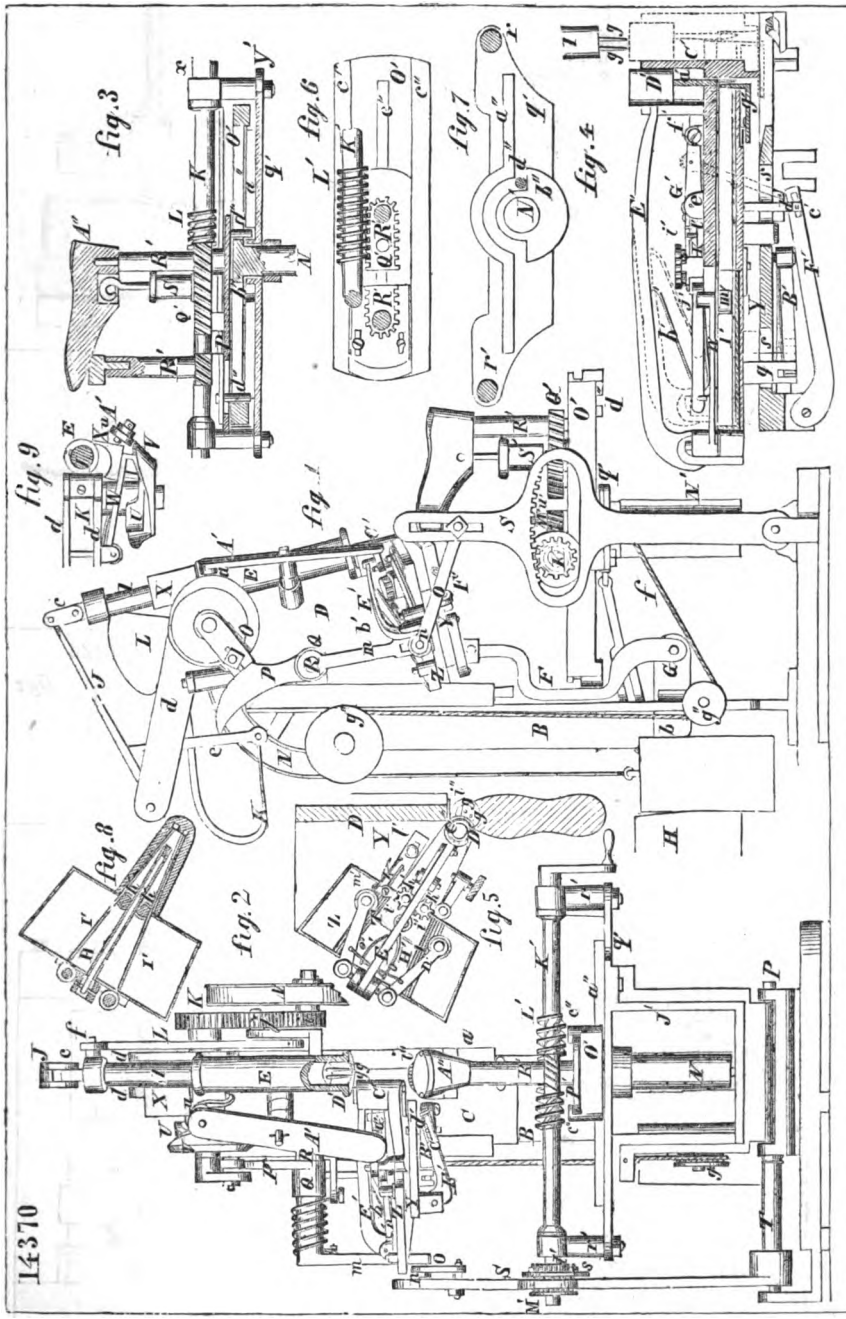

Digitized by Google

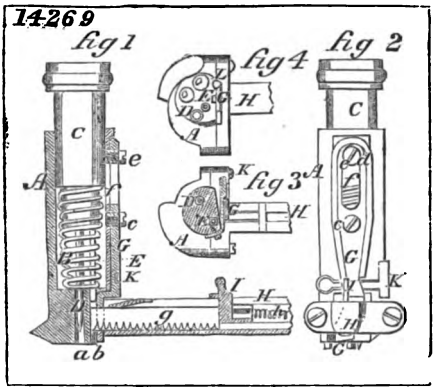

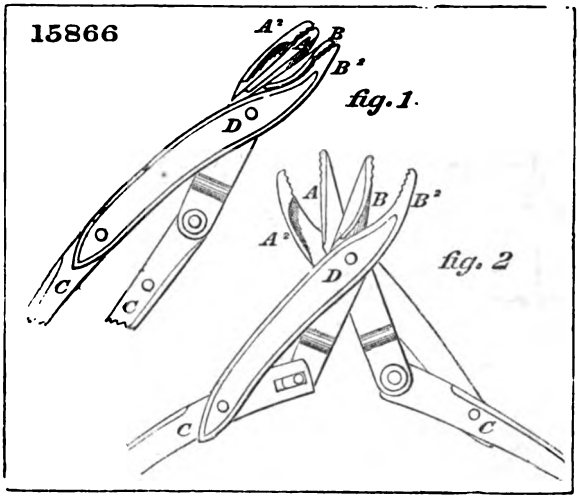

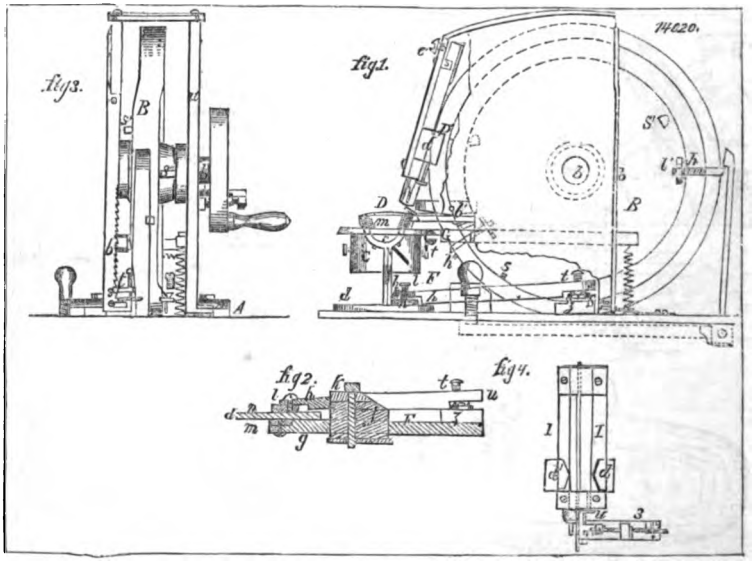

Digitized by Google

14951

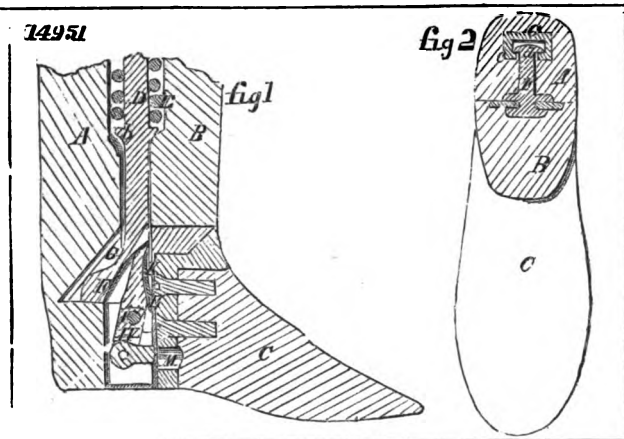

14149

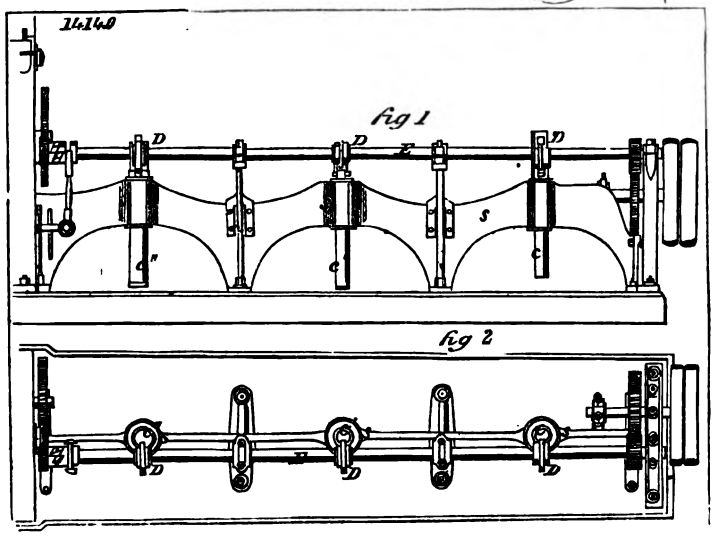

14426

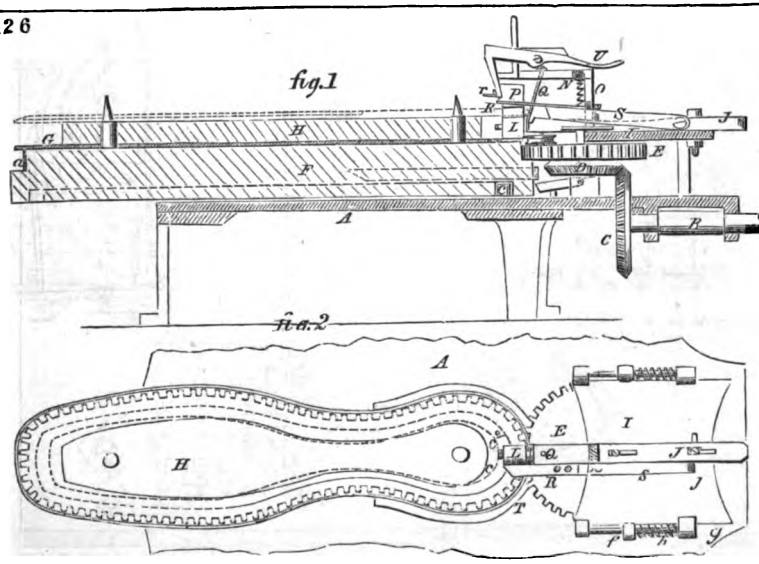

Digitized by Google

14823

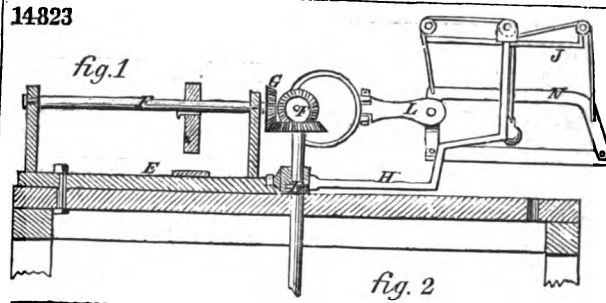

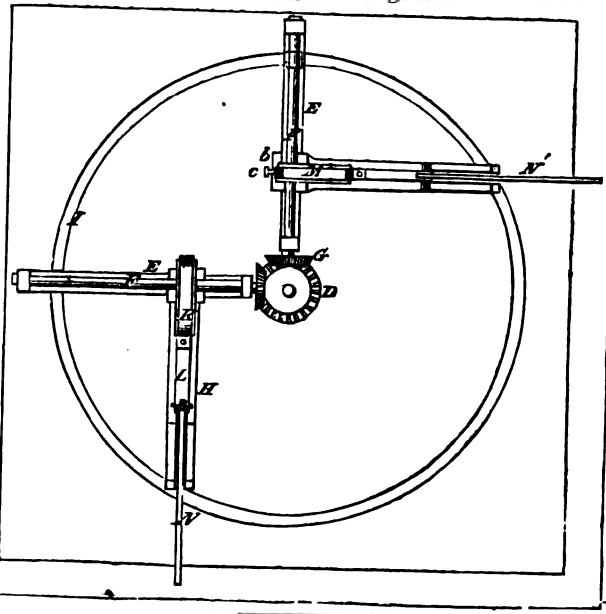

15383

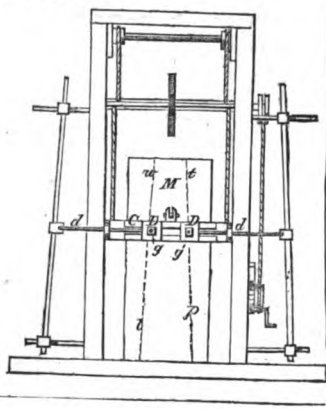

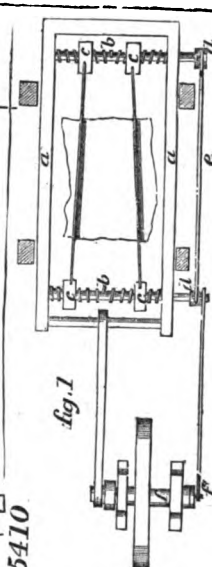

15410

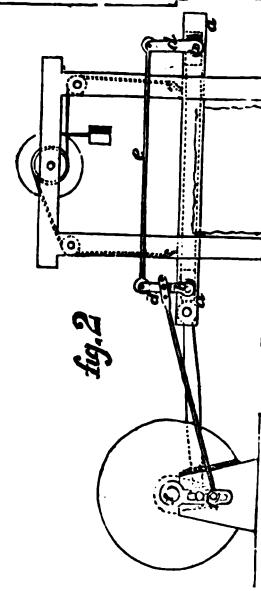

Digitized by Google

14656

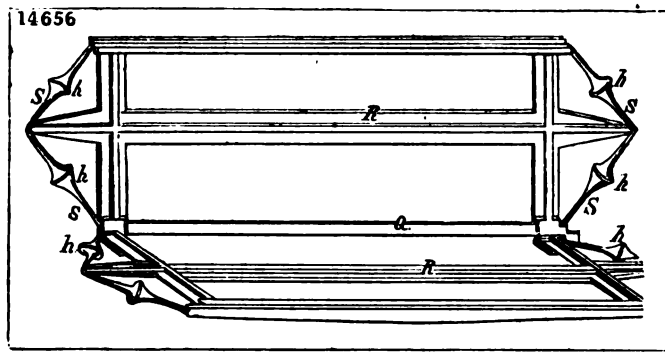

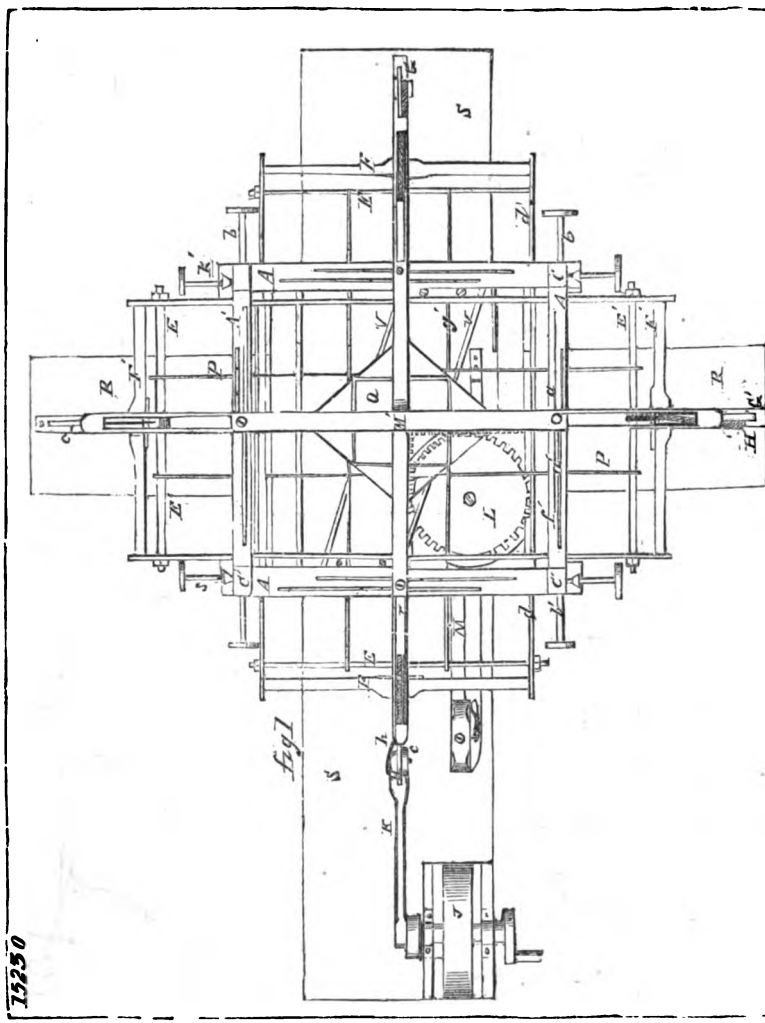

15250

Digitized by Google

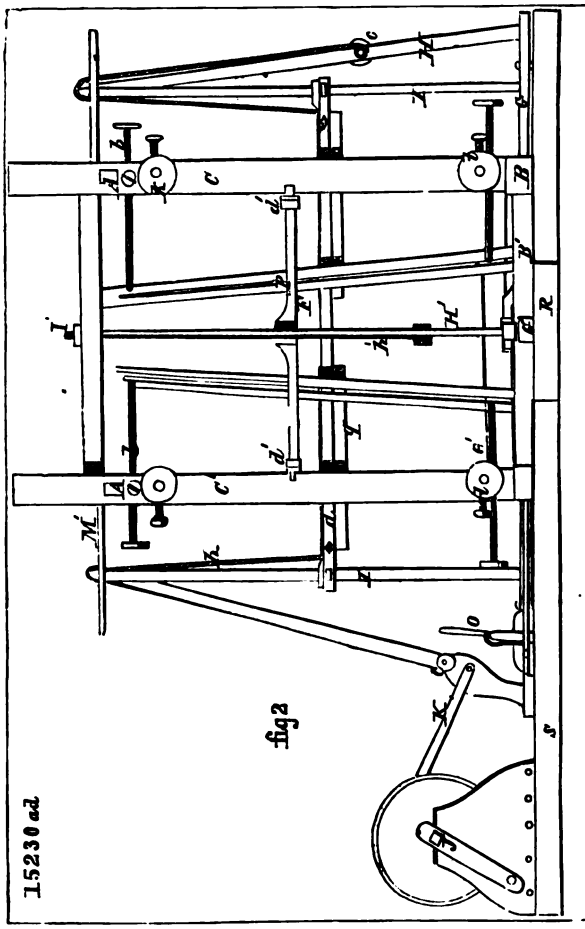

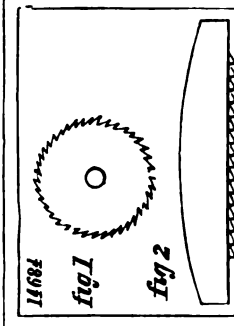

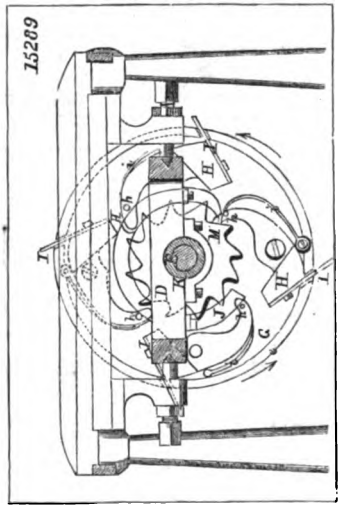

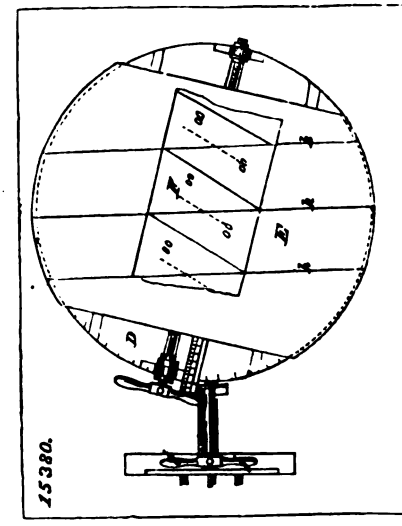

Digitized by Google

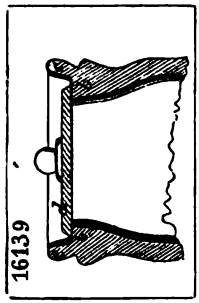

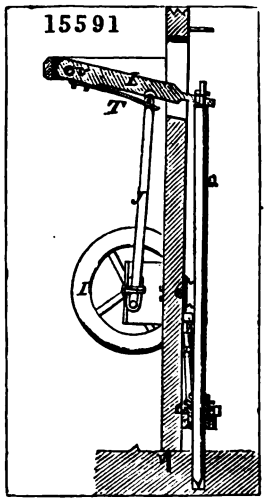

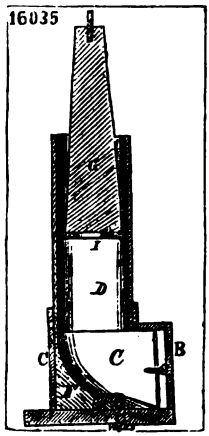

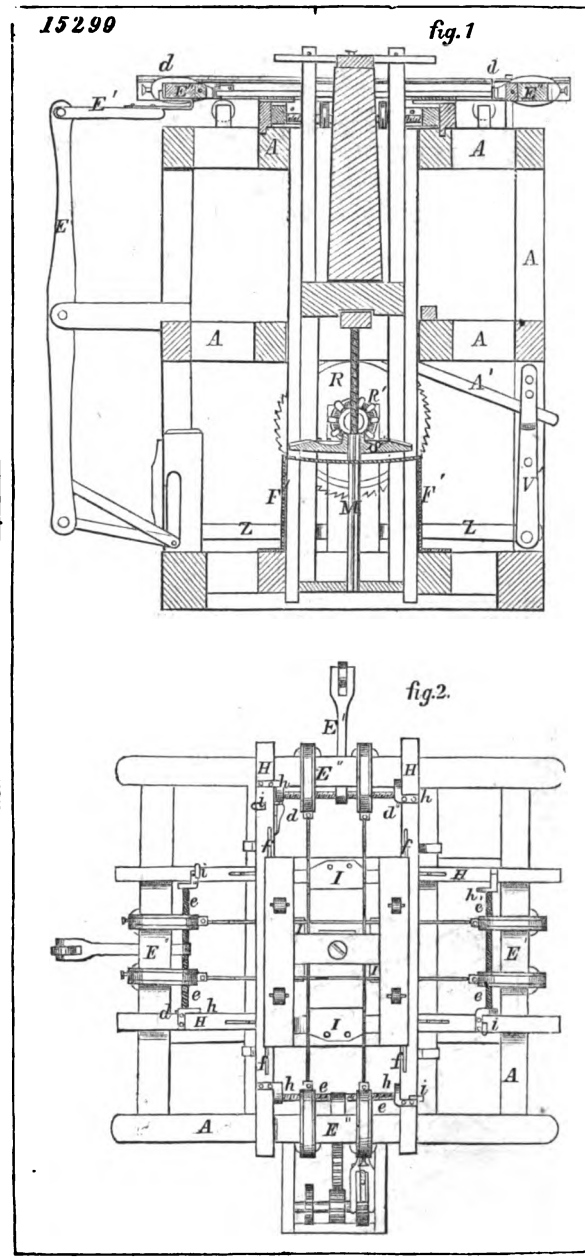

Digitized by Google

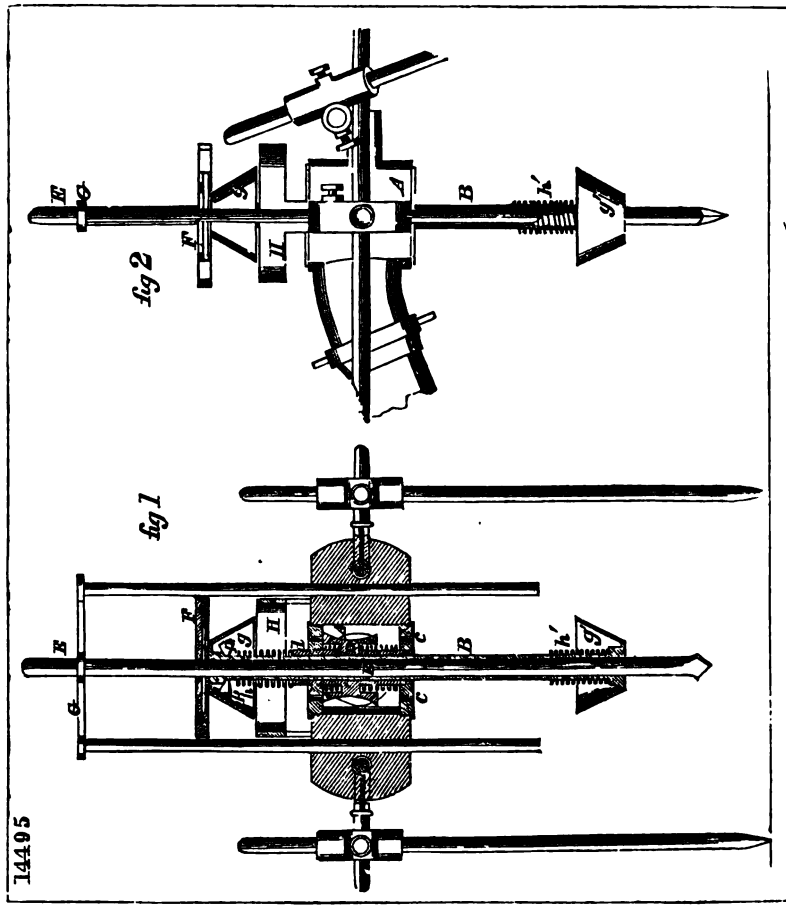

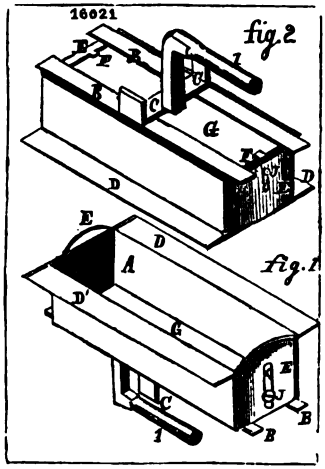

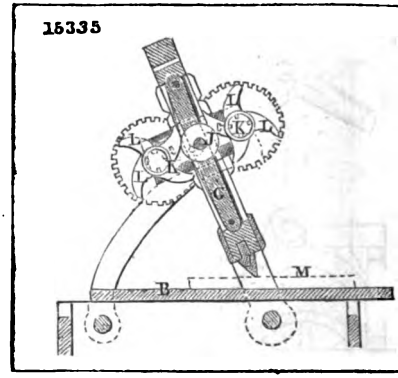

Digitized by Google

14618

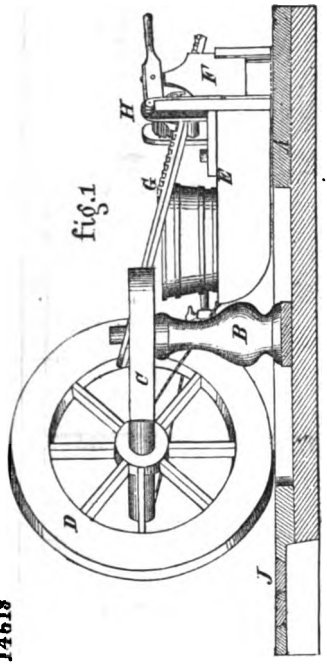

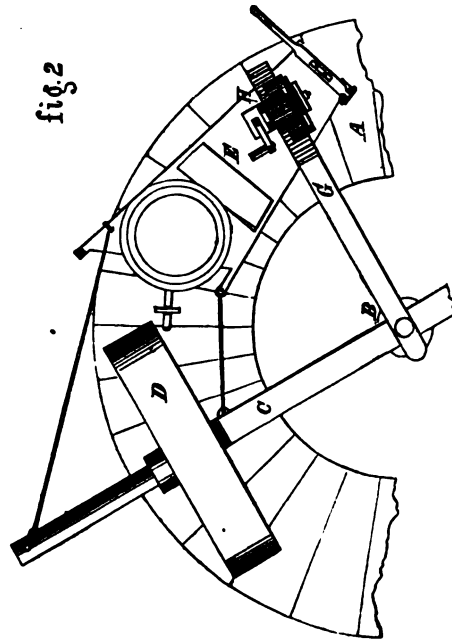

15847

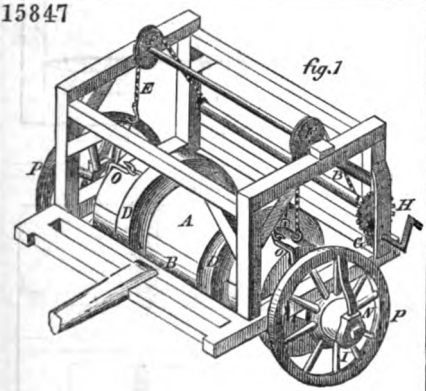

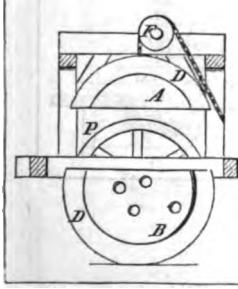

14537

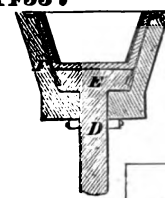

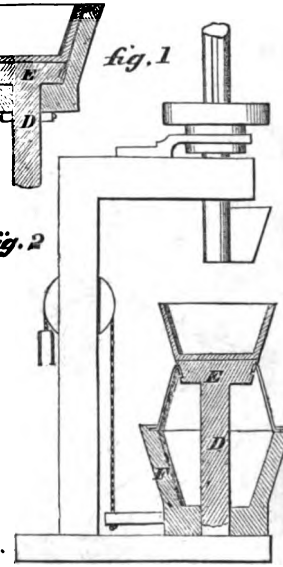

Digitized by Google

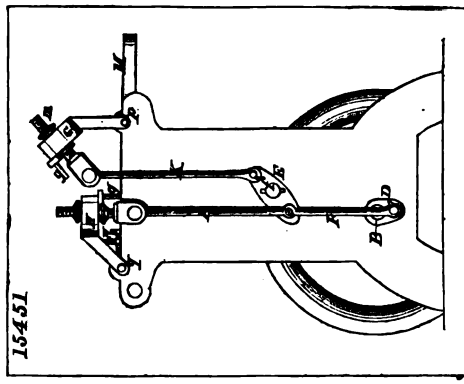

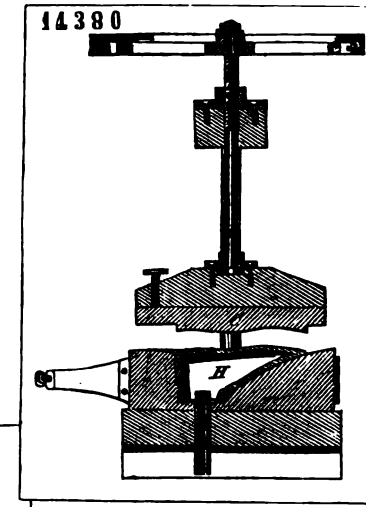

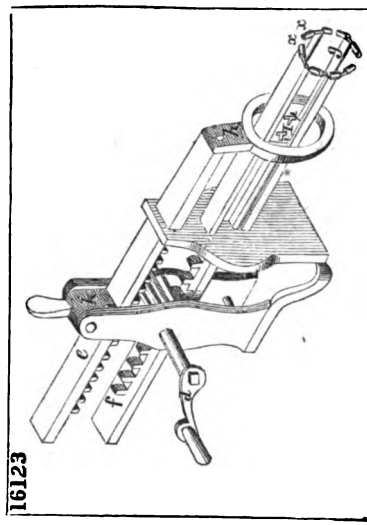

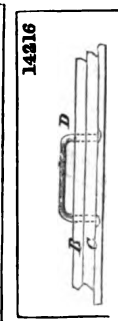

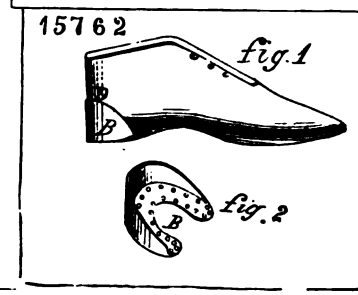

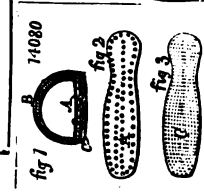

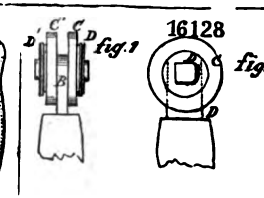

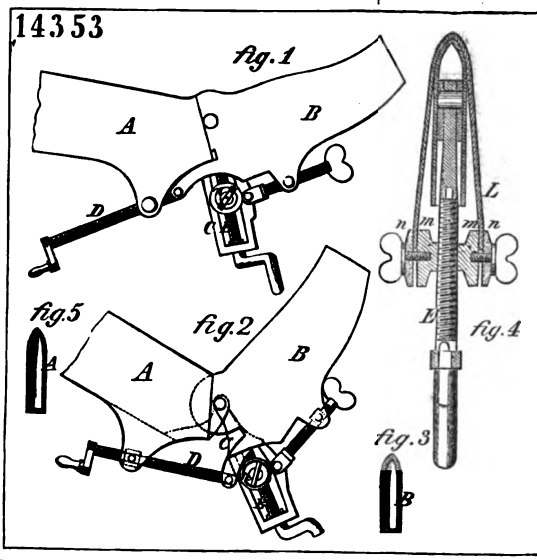

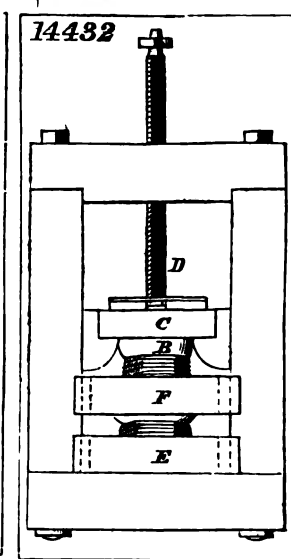

Digitized by Google

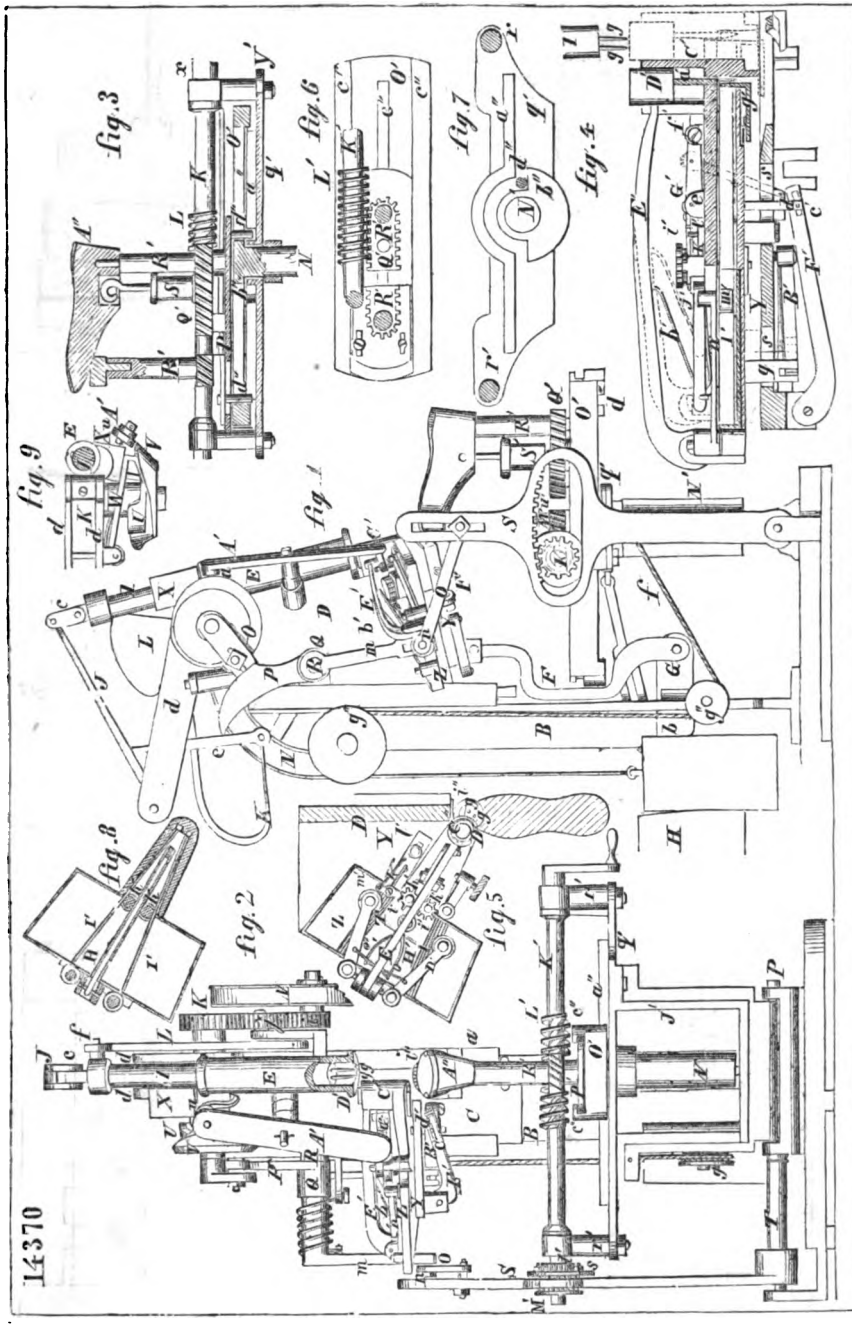

Digitized by Google

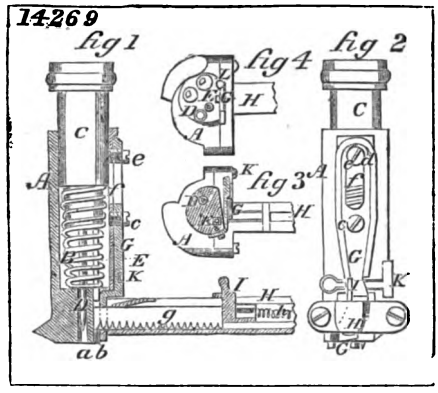

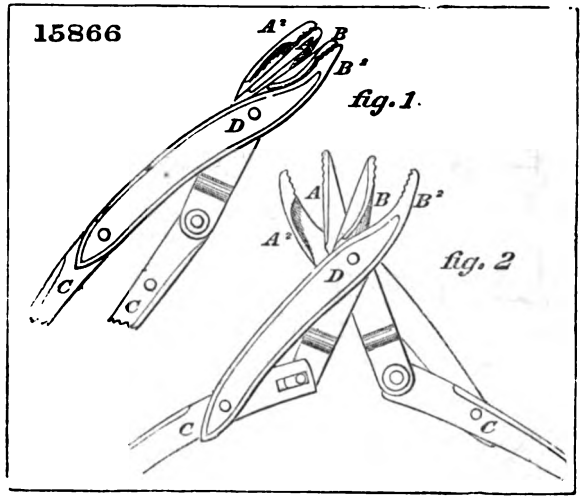

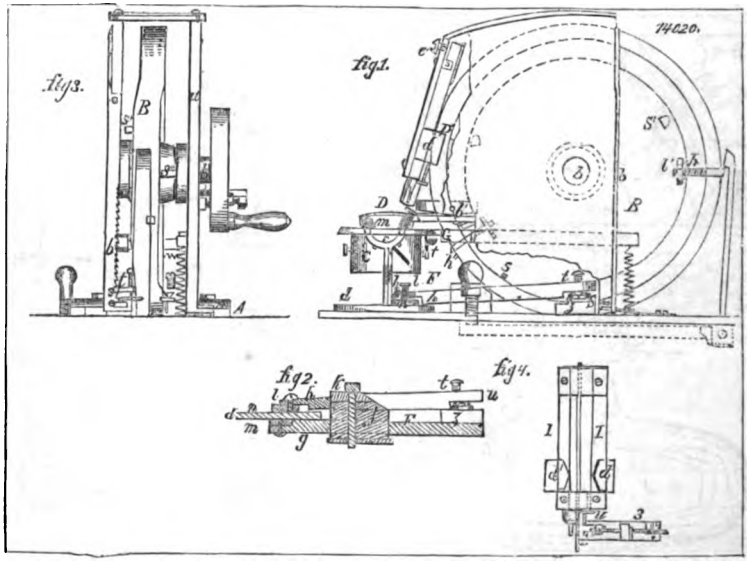

Digitized by Google

14951

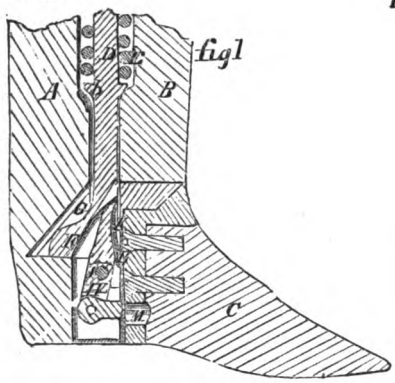

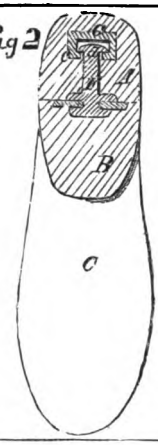

14140

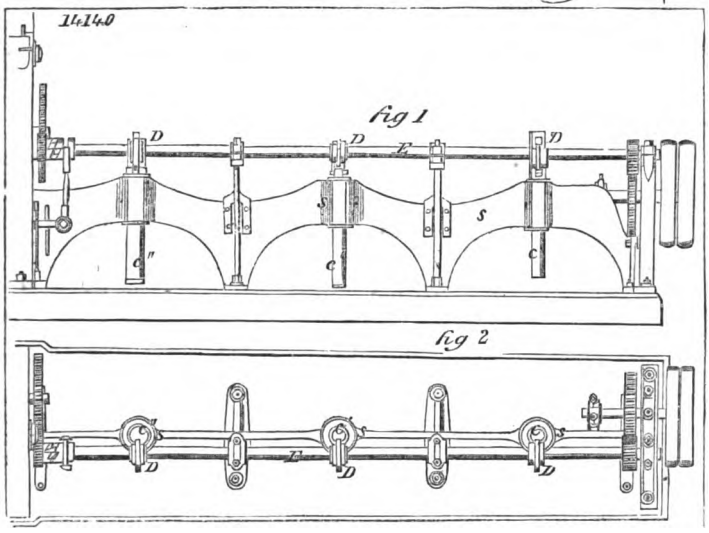

14426

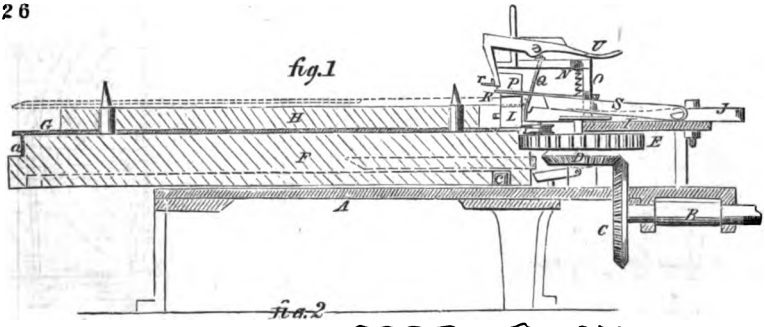

fig.2

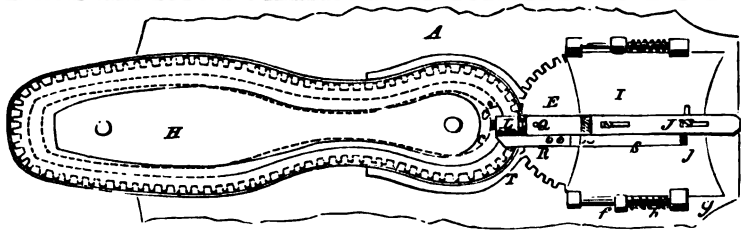

Digitized by Google

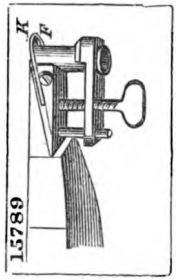

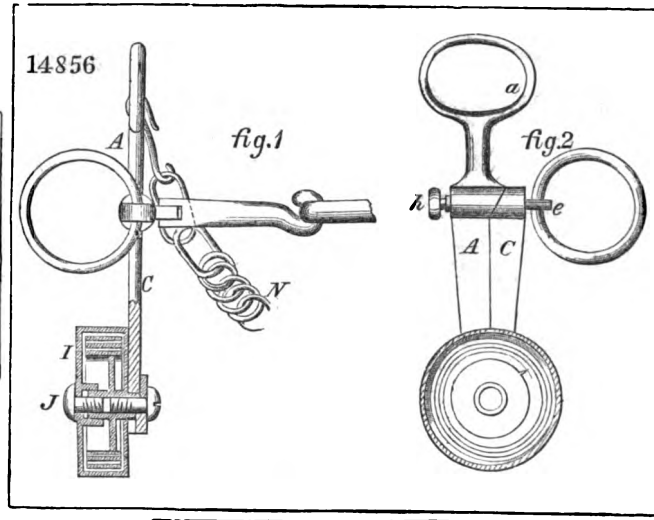

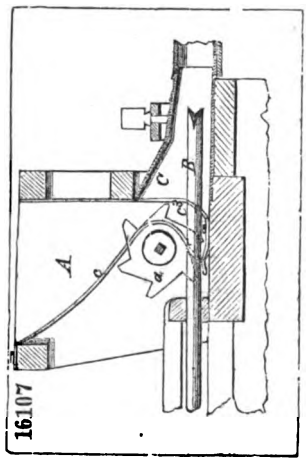

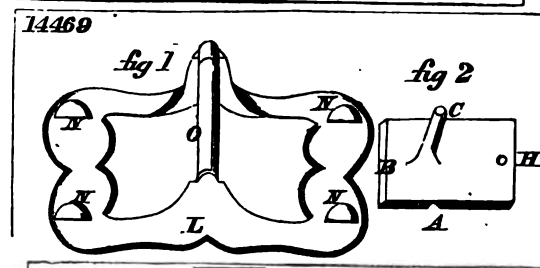

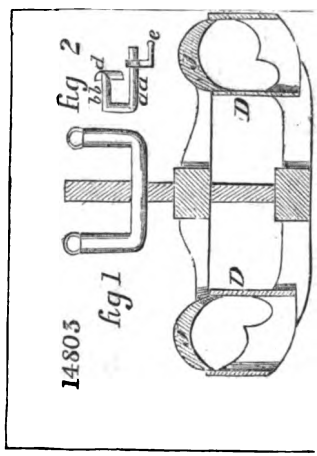

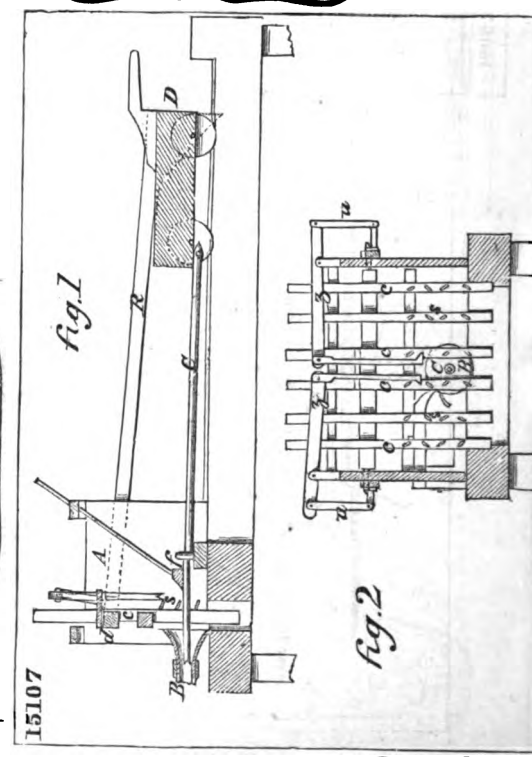

Digitized by Google

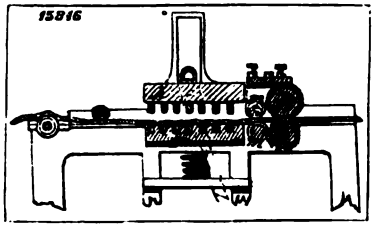

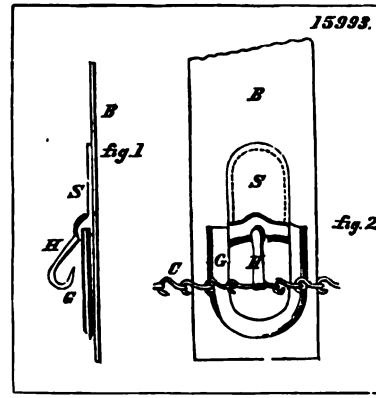

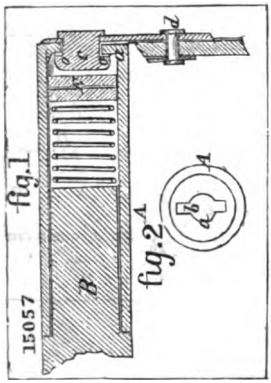

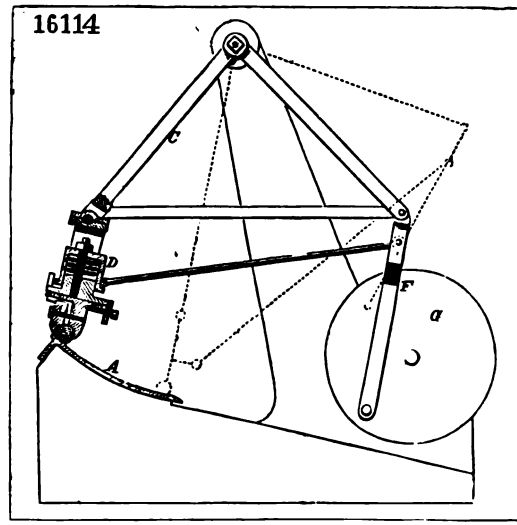

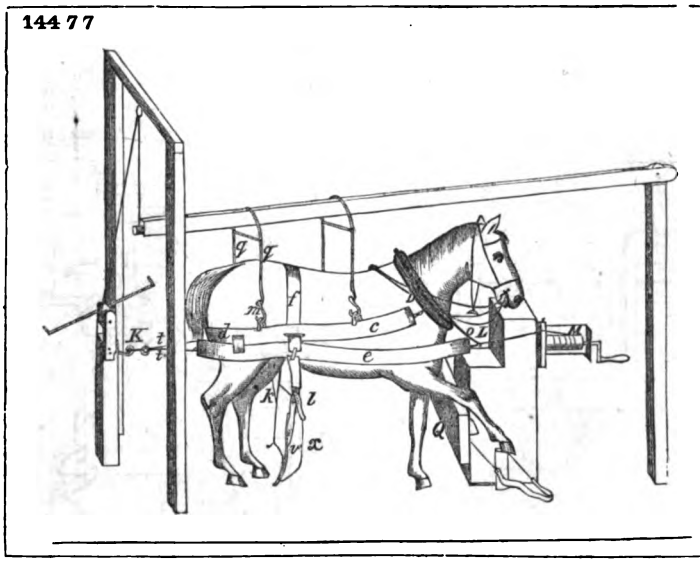

Digitized by Google

14180

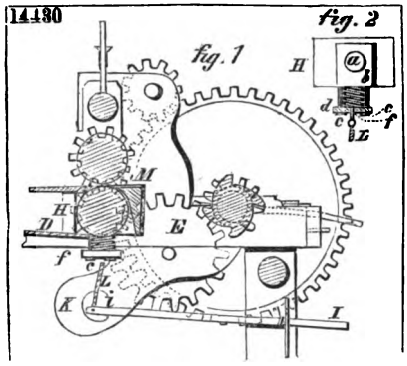

15807

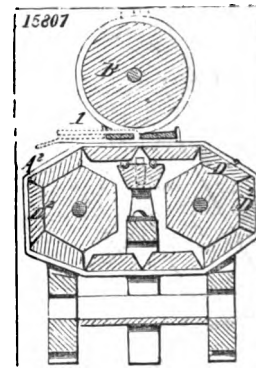

14606

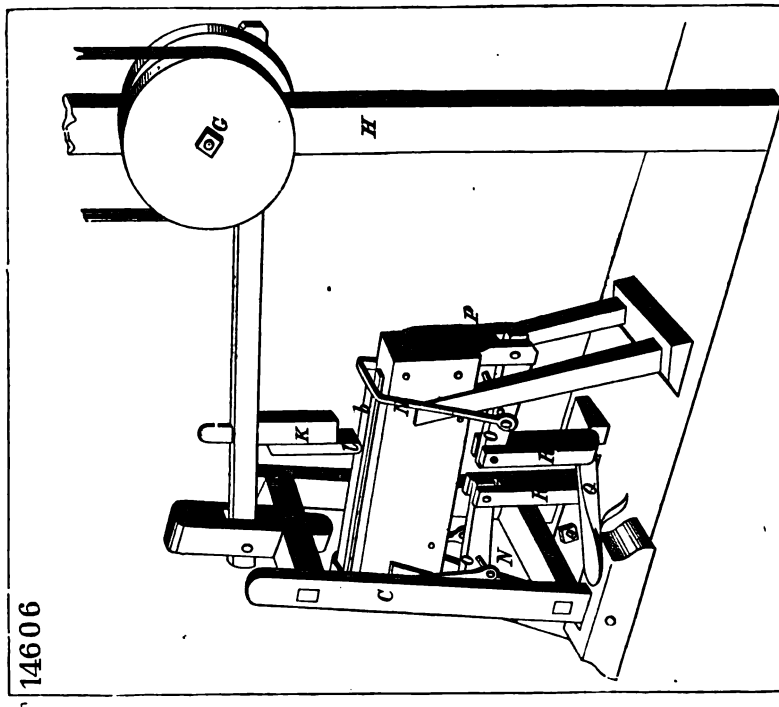

16205

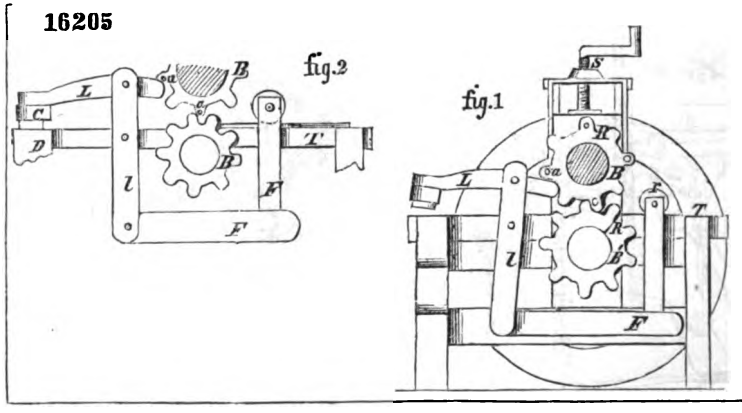

Digitized by Google

14698

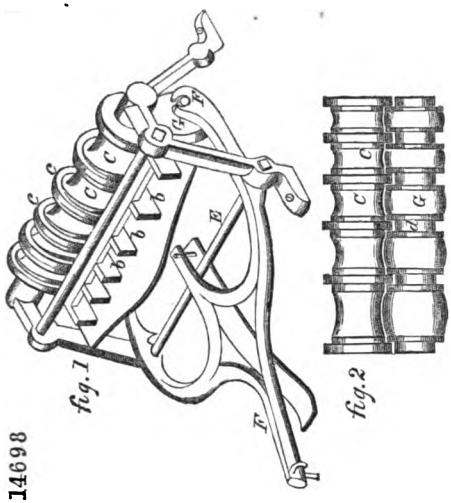

14821

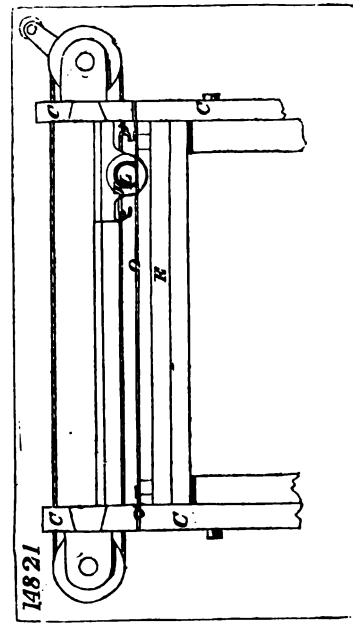

14211

fig. 1

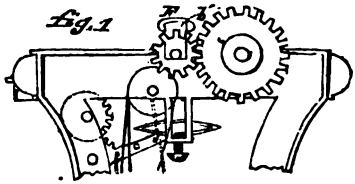

fig. 2

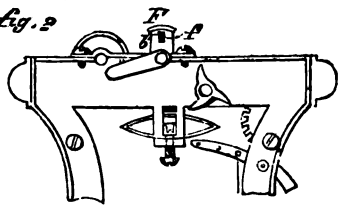

fig 3

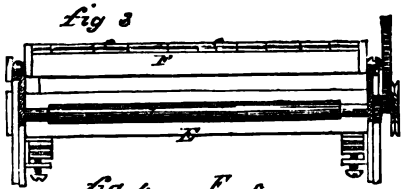

fig. 4.

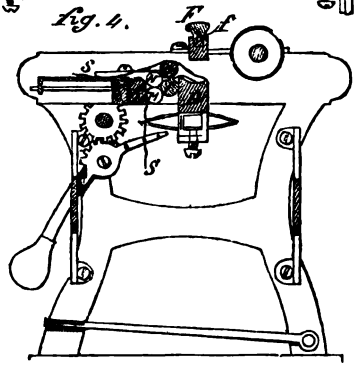

15462

fig. 1

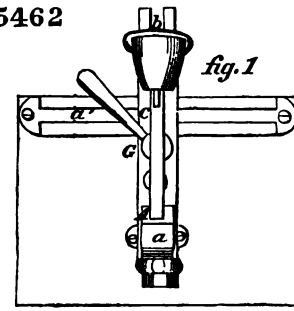

fig. 2

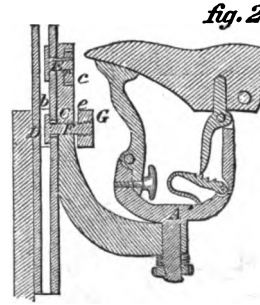

14534

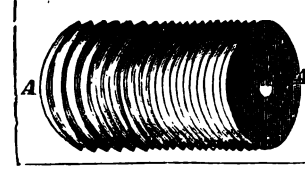

Digitized by Google

14495

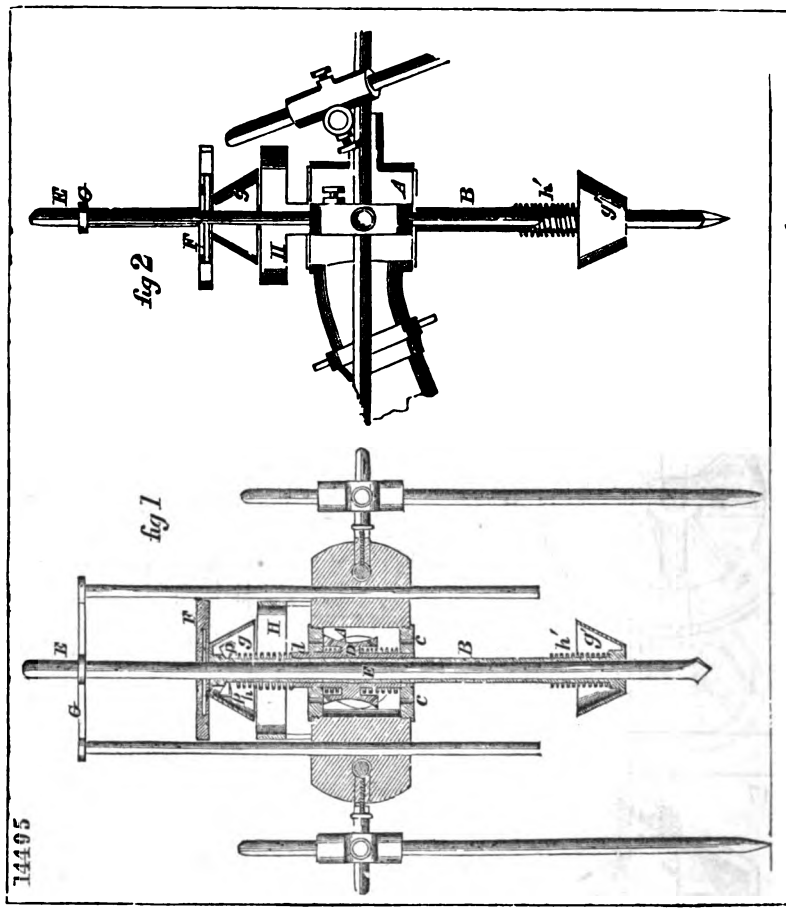

16021

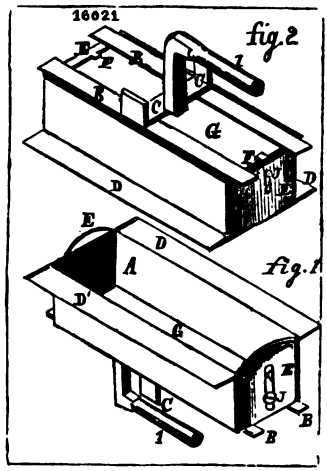

15335

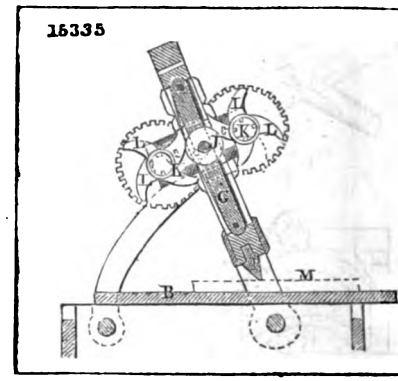

14618

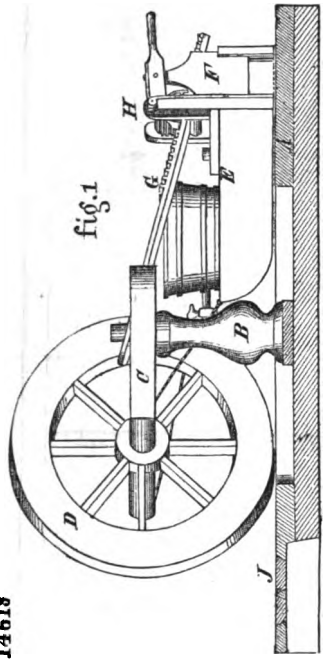

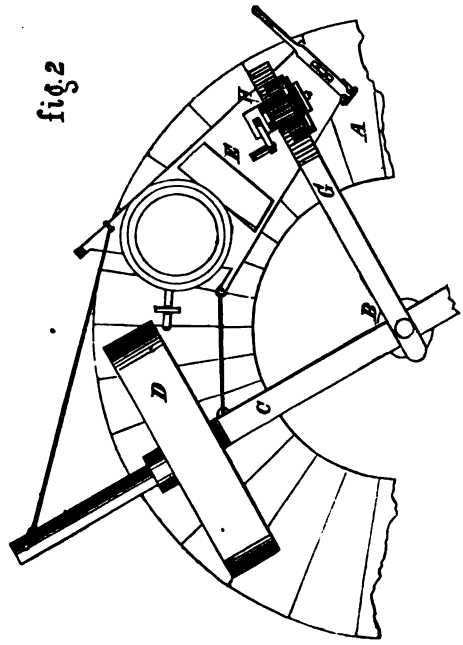

15847

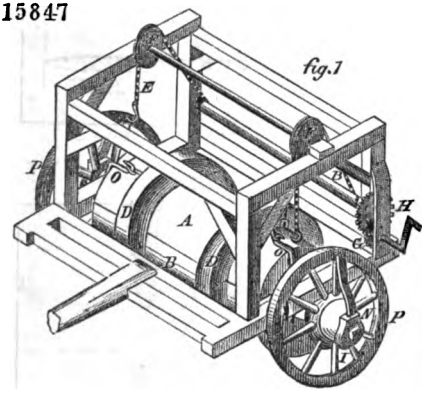

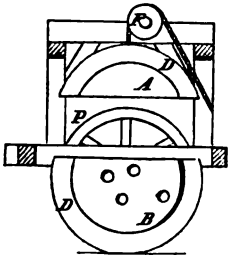

14537

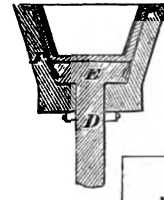

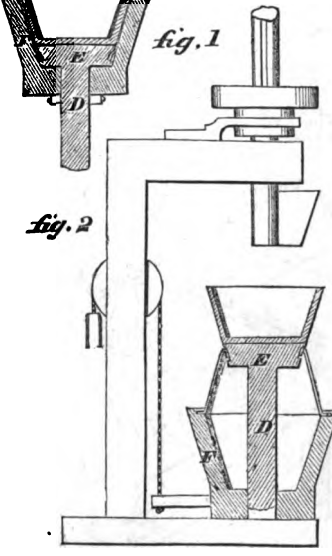

Digitized by Google

15451

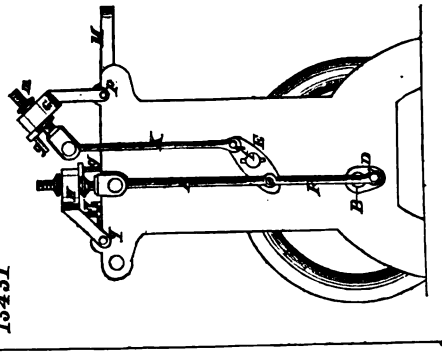

14380

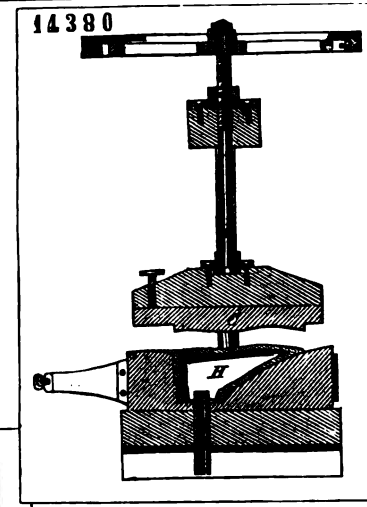

16123

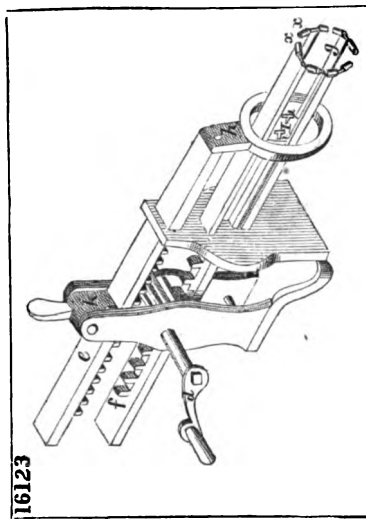

14216

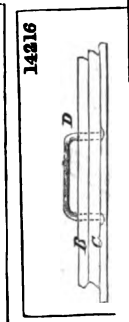

15762

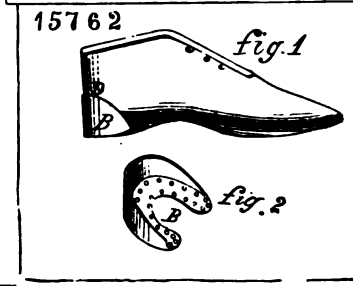

14080

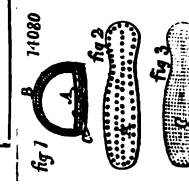

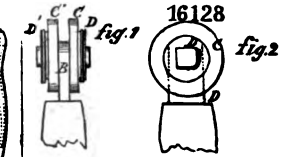

14353

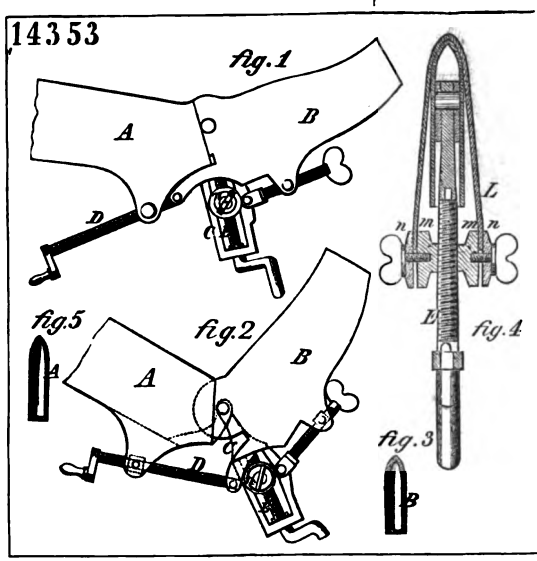

14432

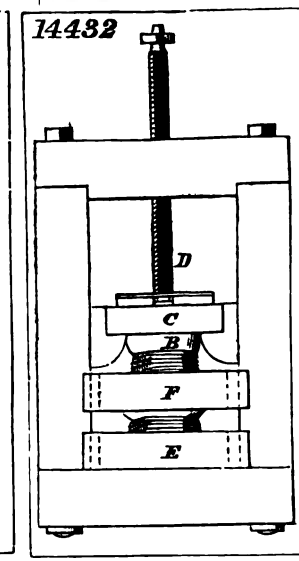

Digitized by Google

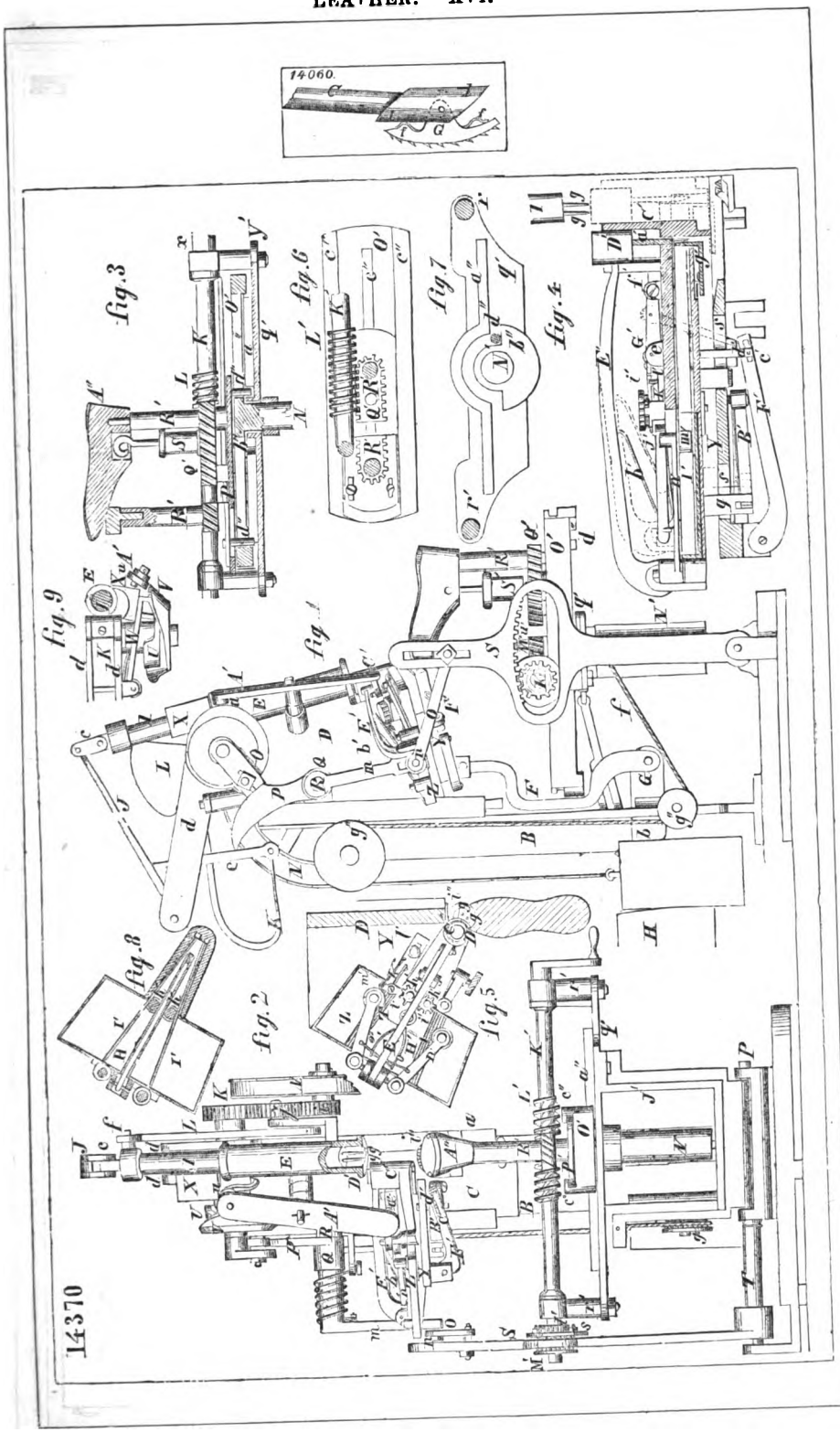

Digitized by Google

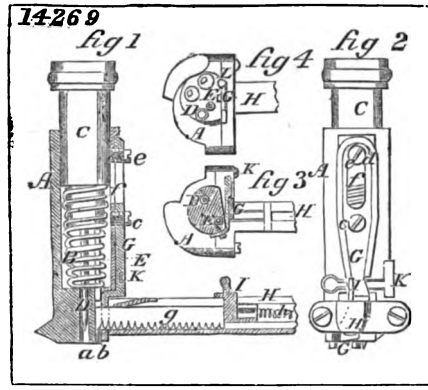

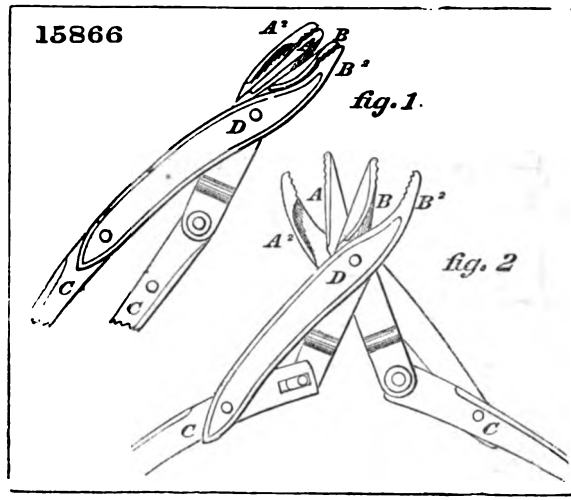

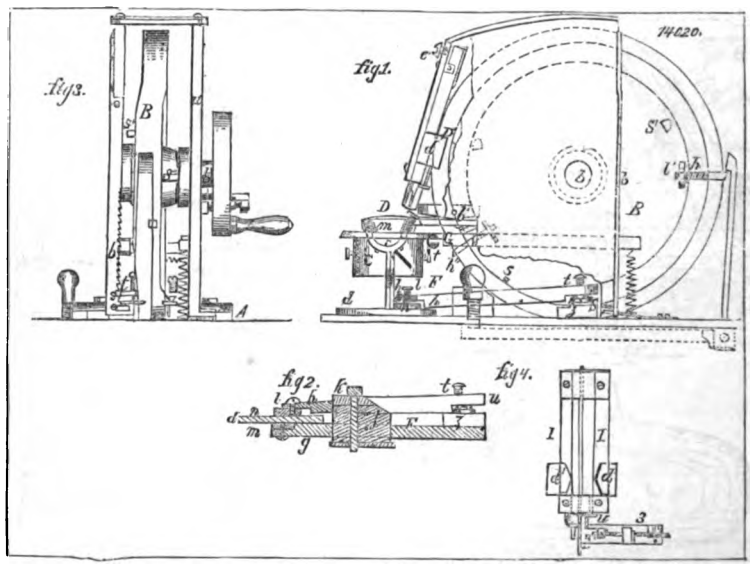

Digitized by Google

14951

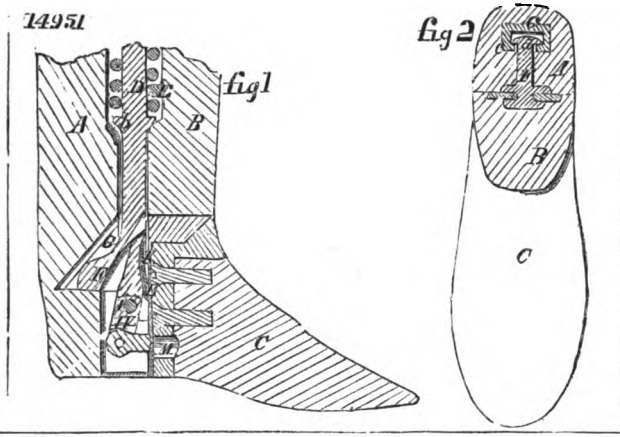

14140

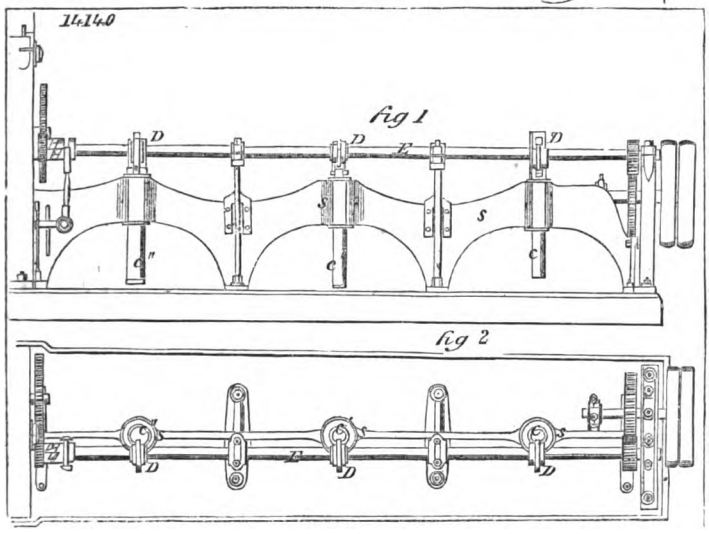

14426

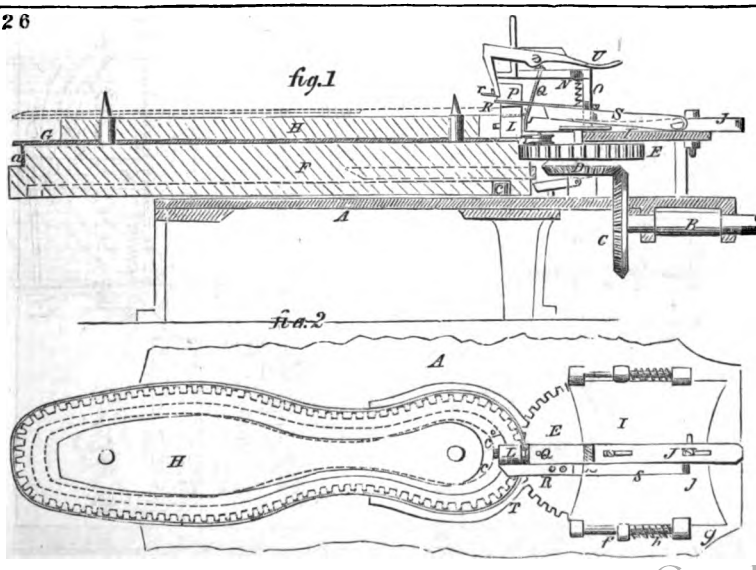

Digitized by Google

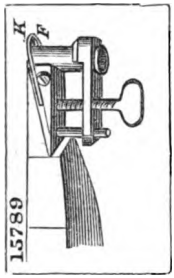

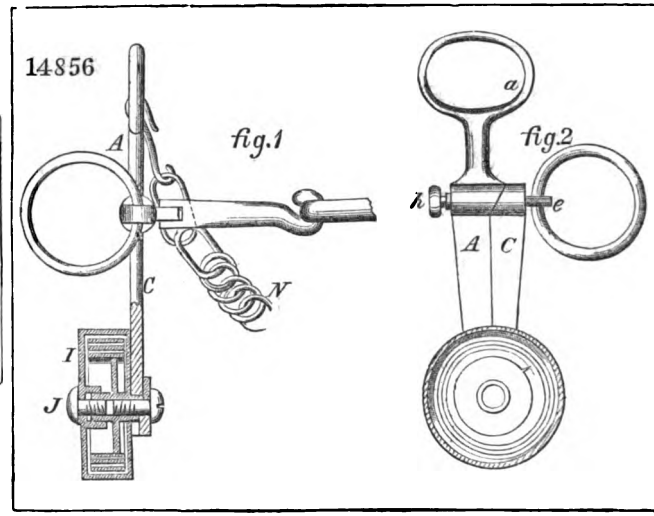

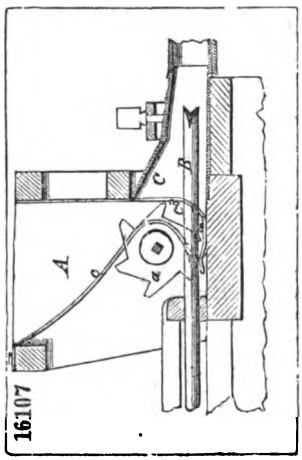

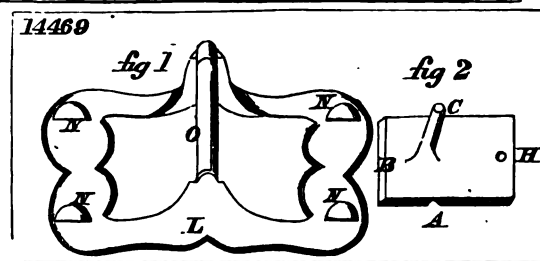

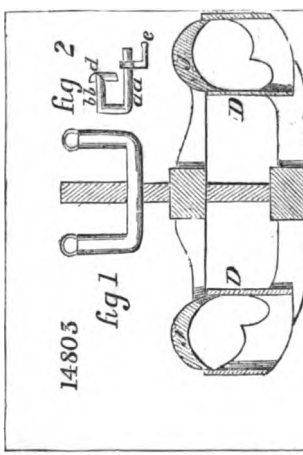

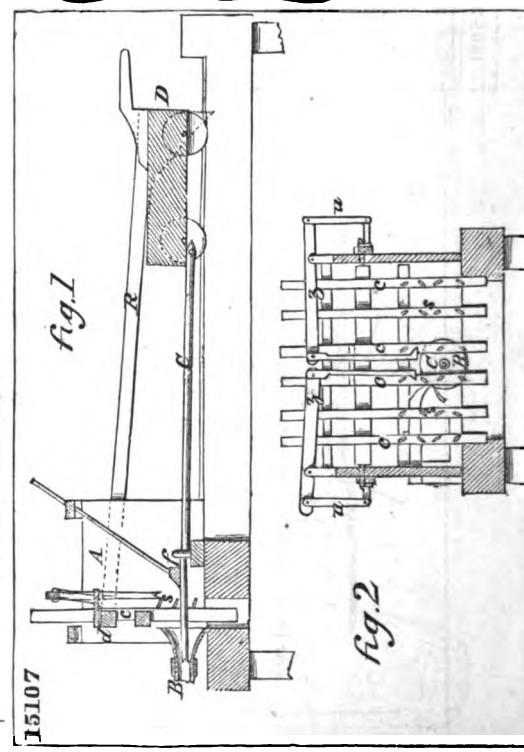

Digitized by Google

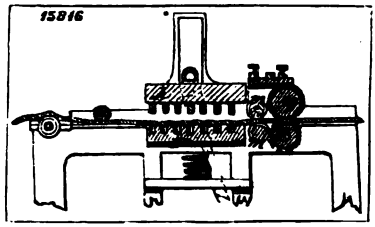

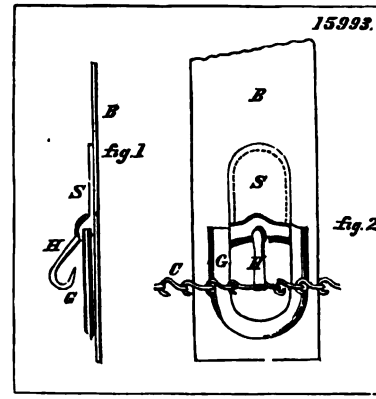

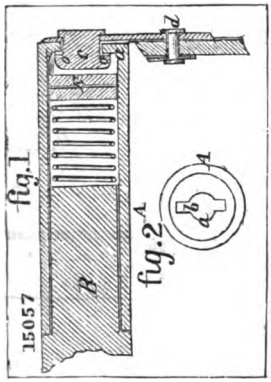

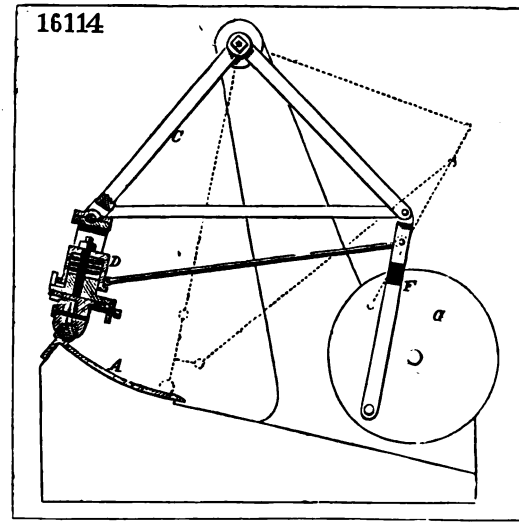

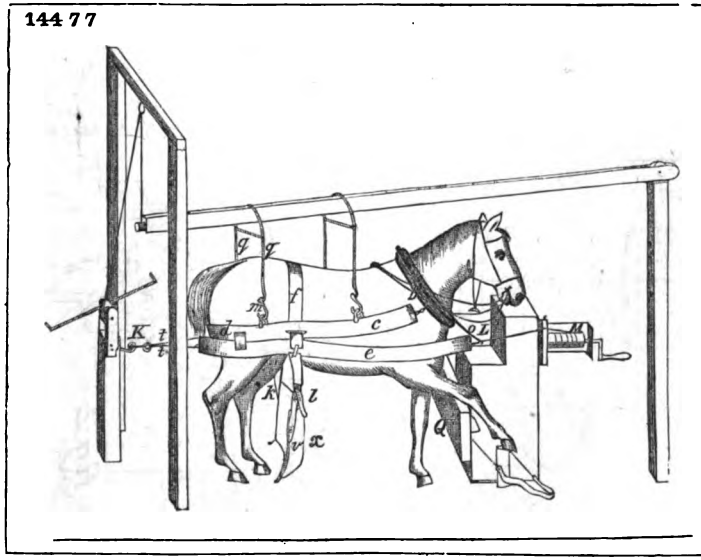

Digitized by Google

14180

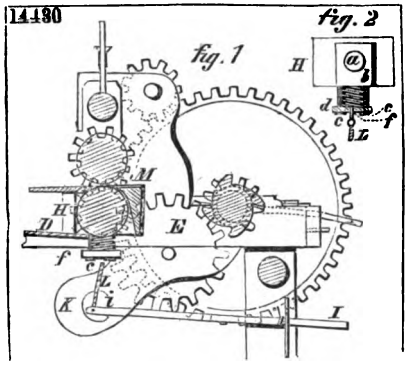

15207

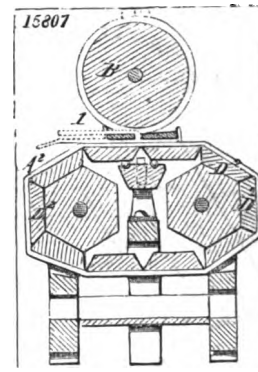

14606

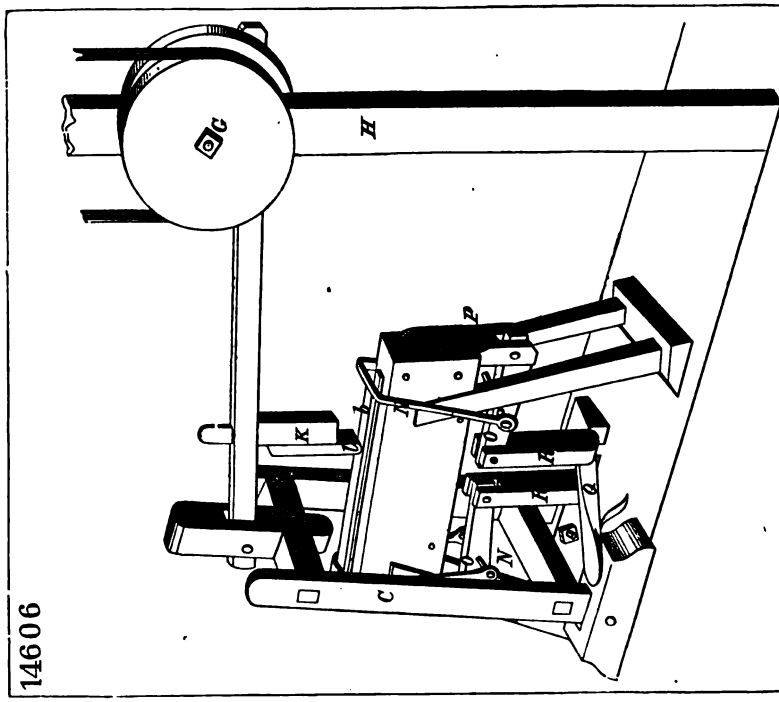

16205

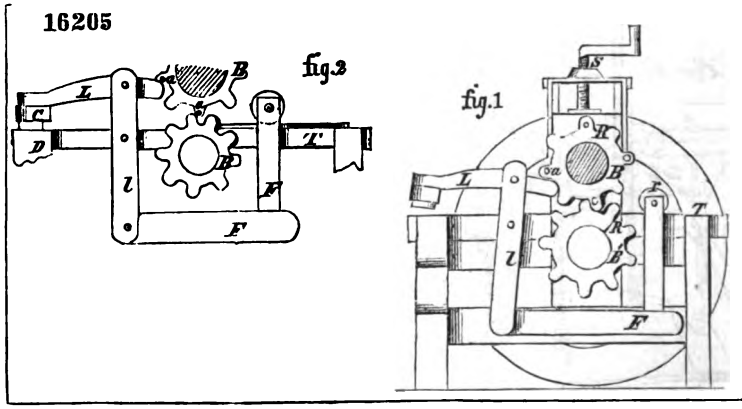

Digitized by Google

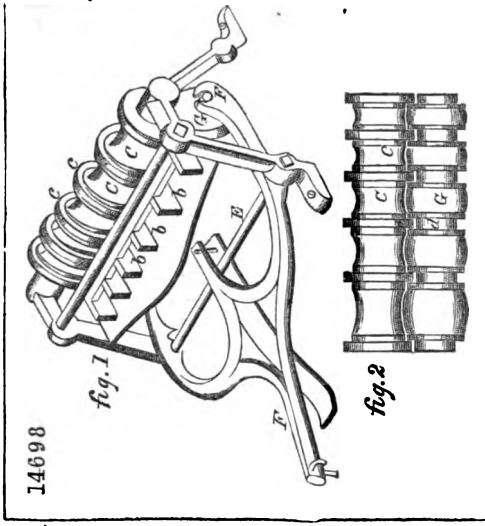

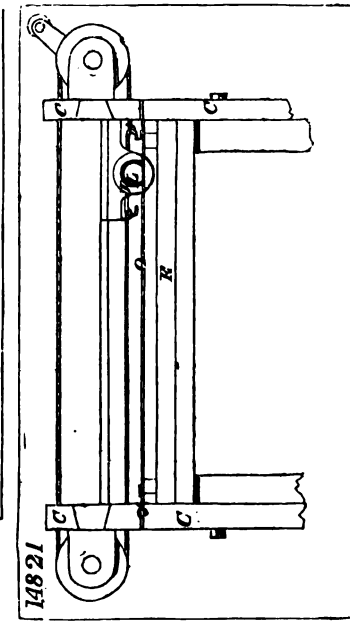

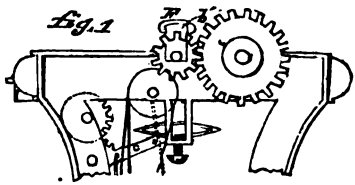

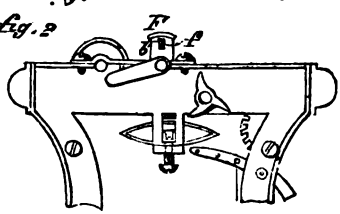

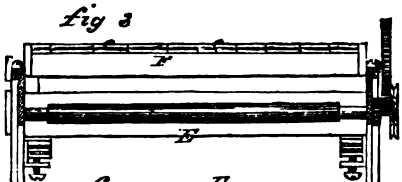

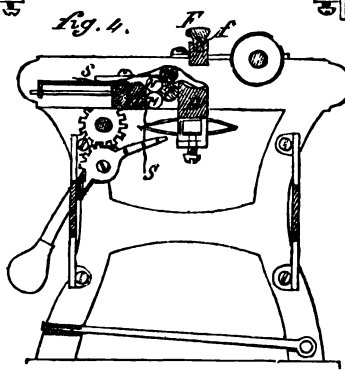

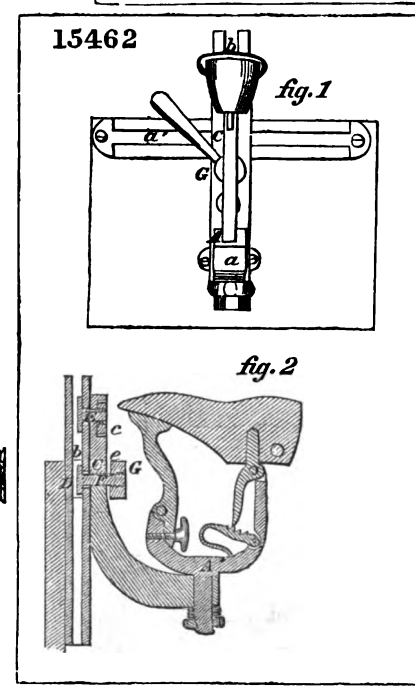

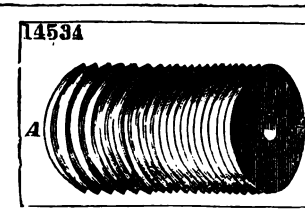

Digitized by Google

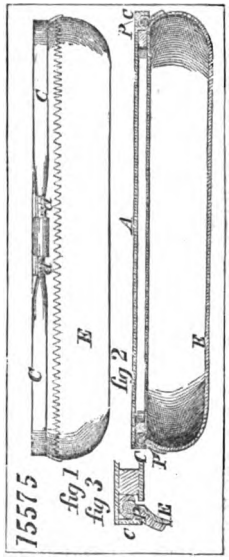

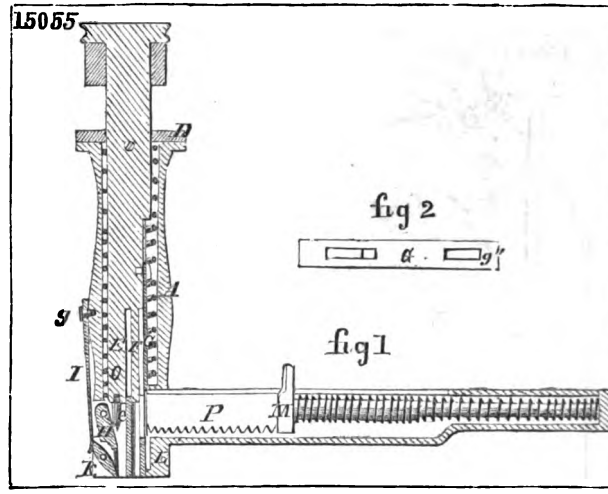

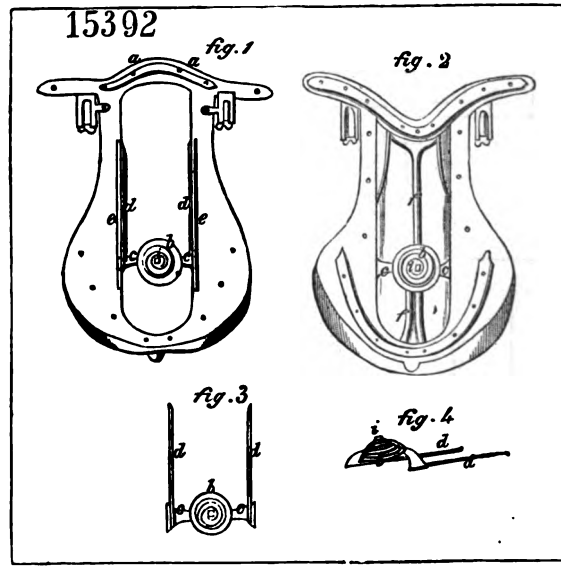

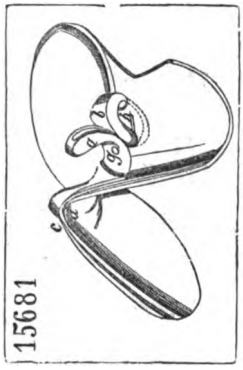

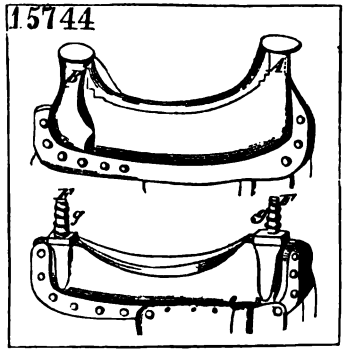

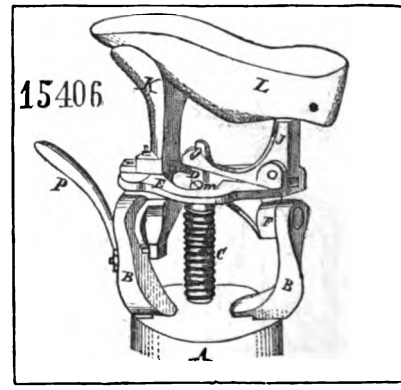

Digitized by Google

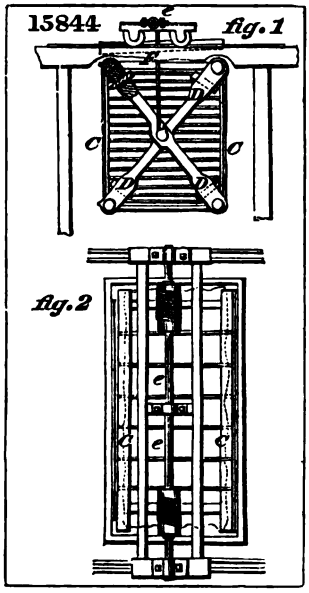

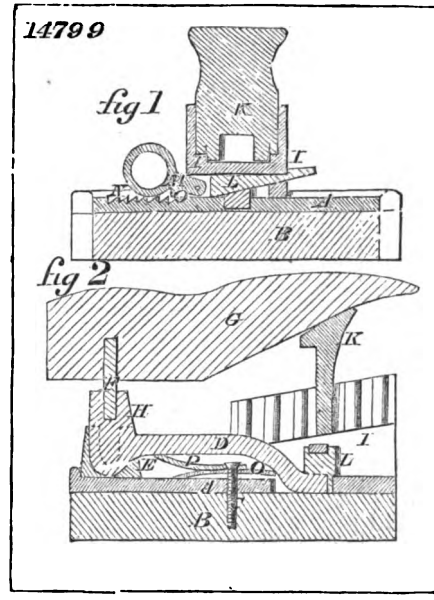

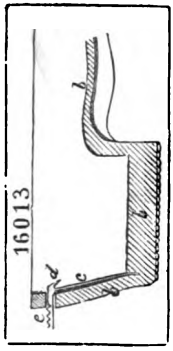

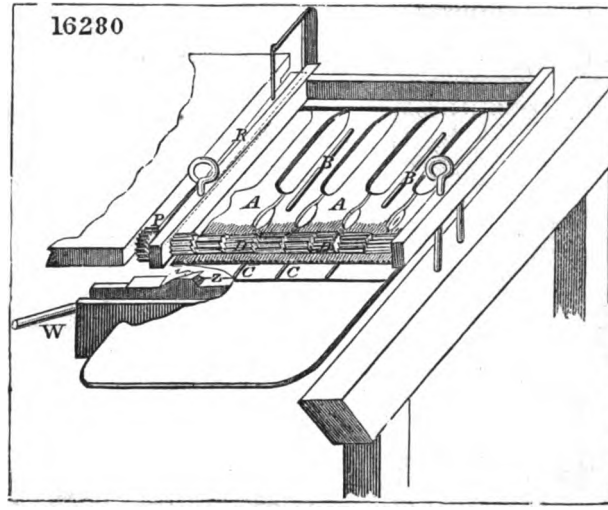

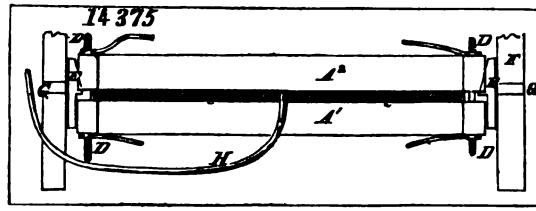

Digitized by Google

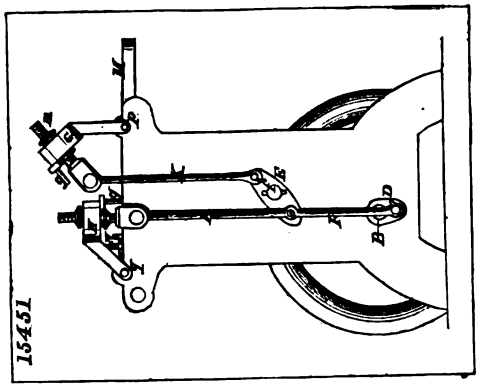

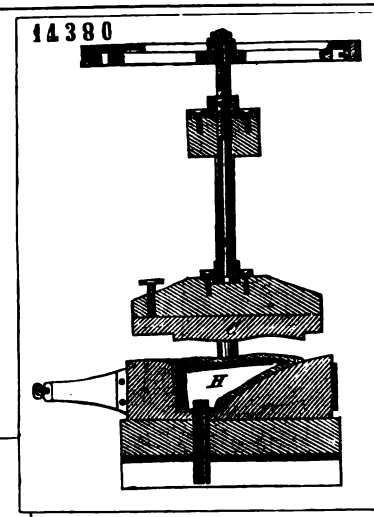

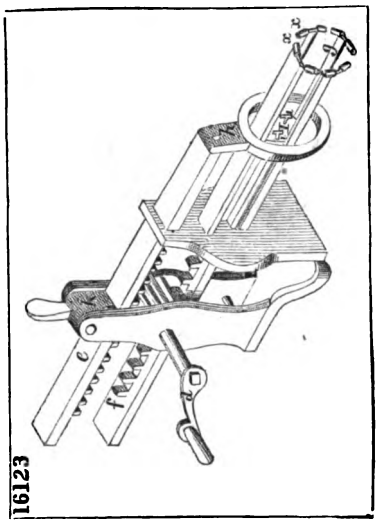

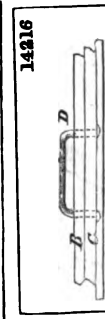

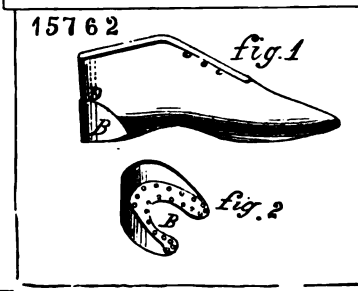

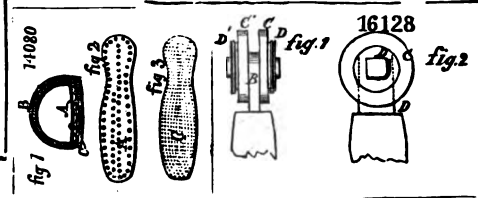

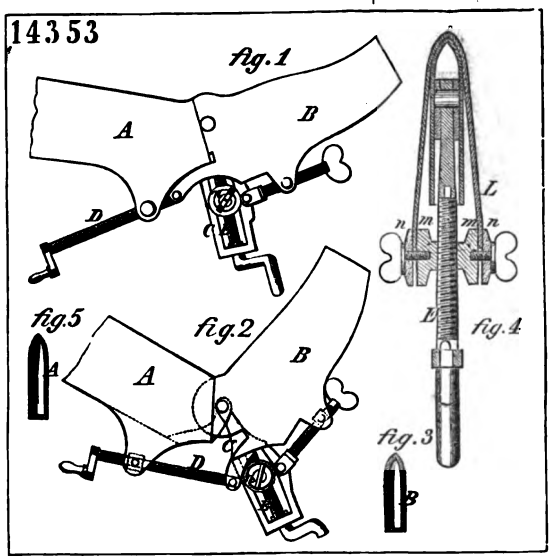

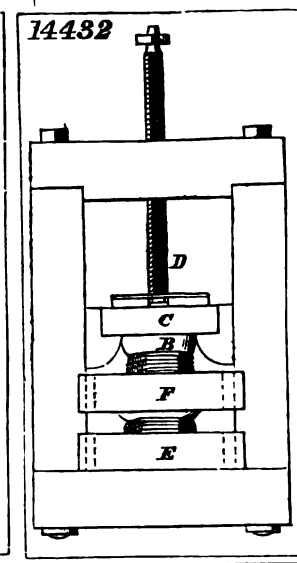

Digitized by Google

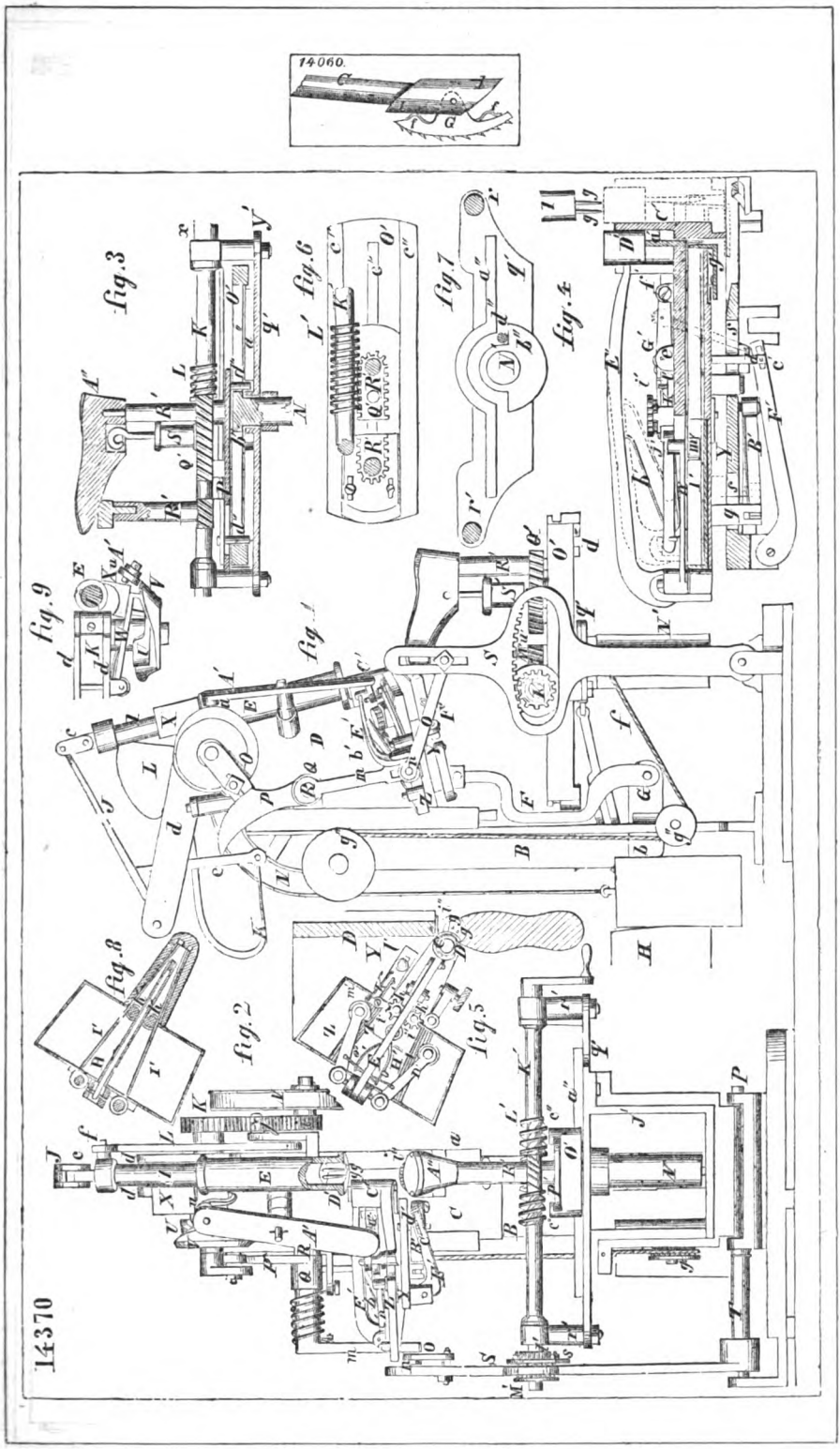

Digitized by Google

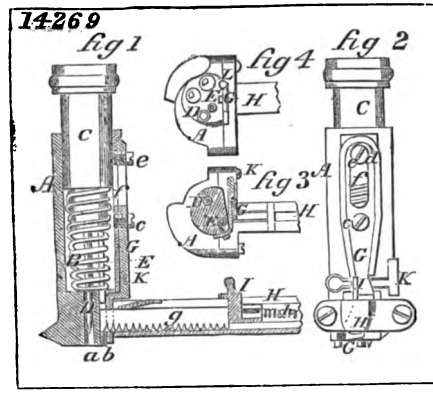

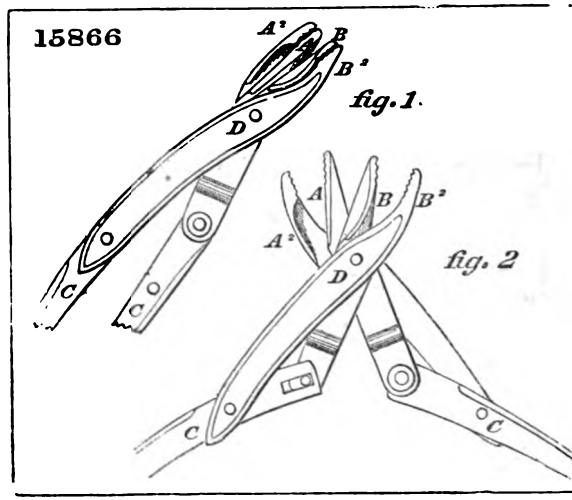

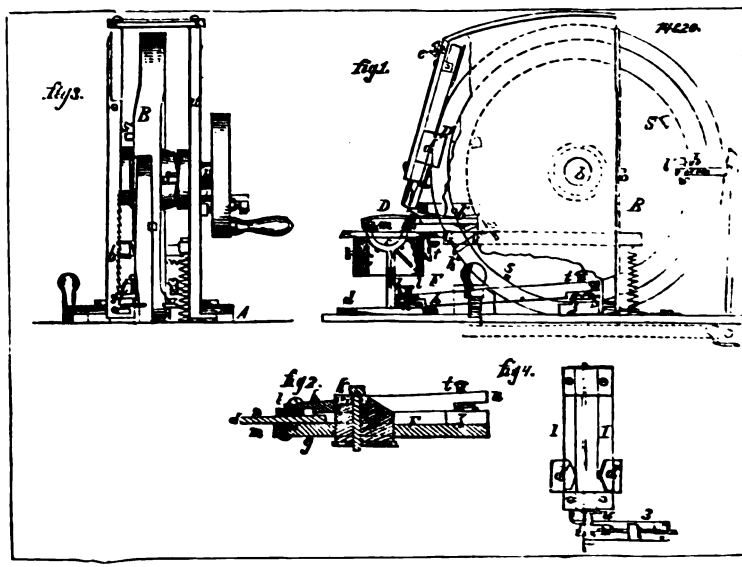

Digitized by Google

14951

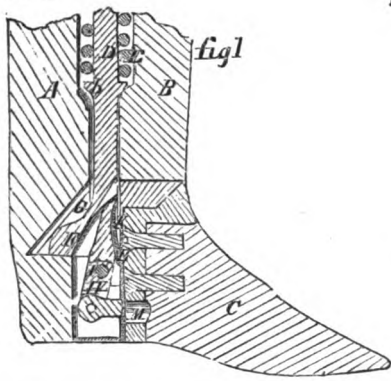

14140

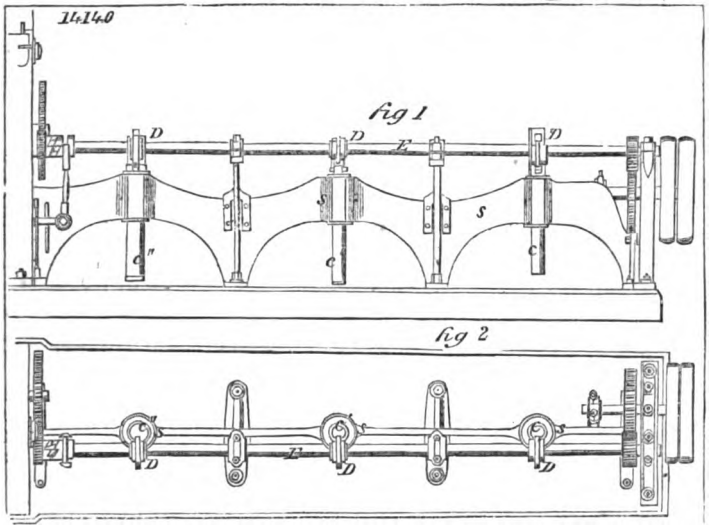

14426

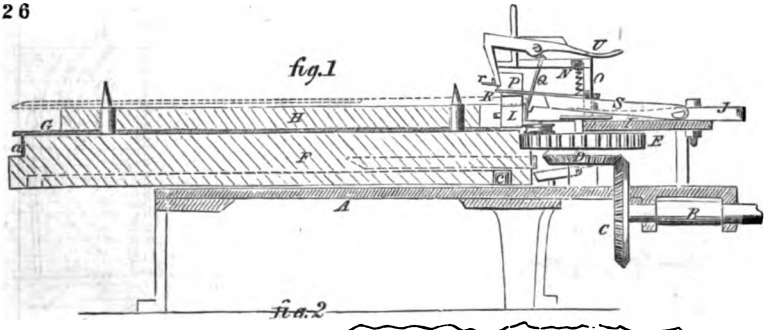

Digitized by Google

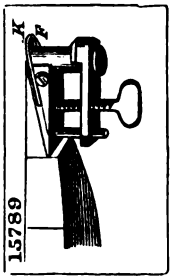

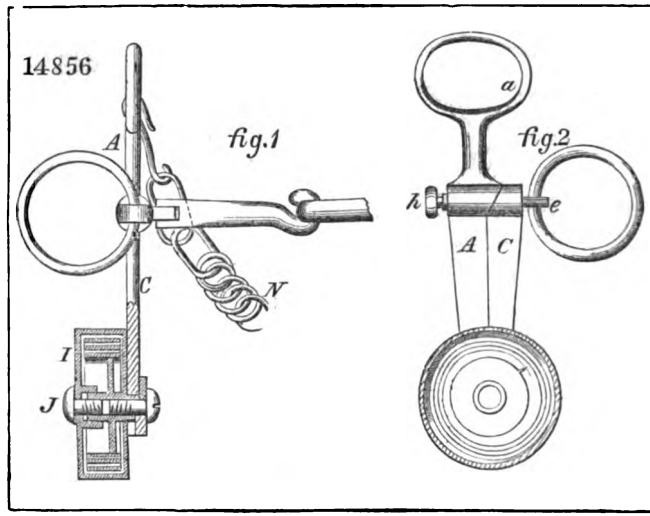

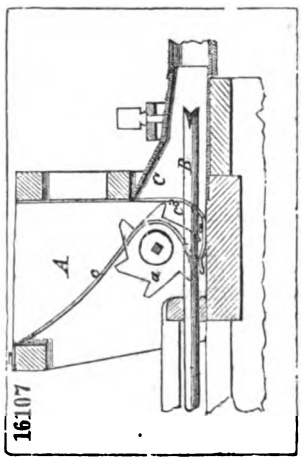

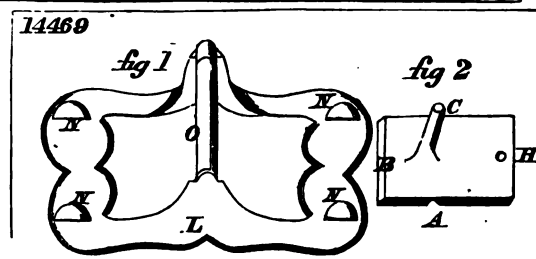

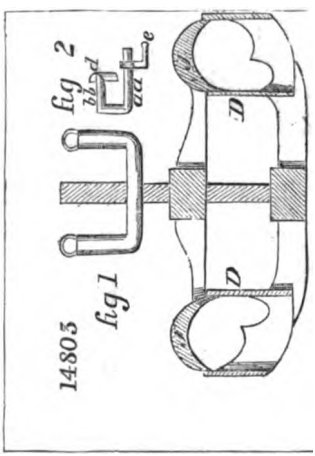

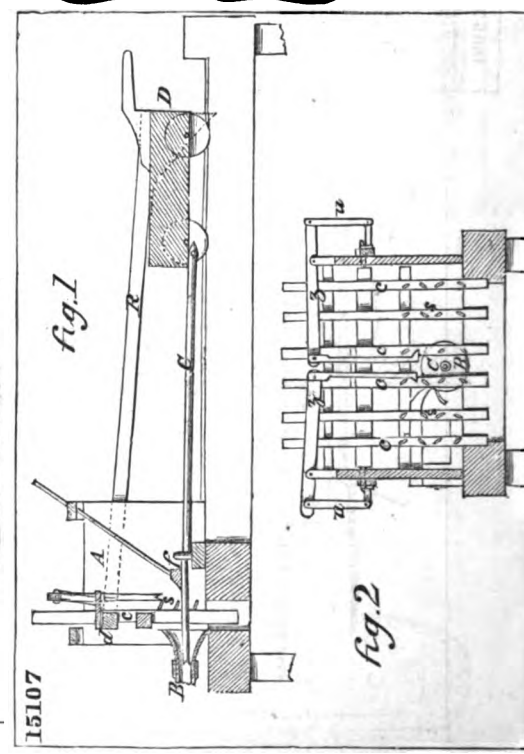

Digitized by Google

15846

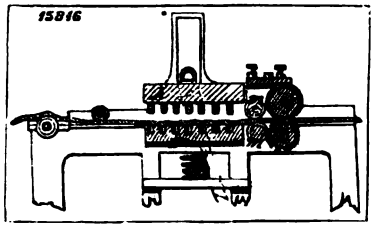

15993.

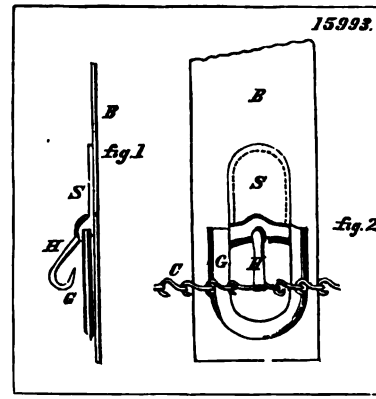

15057

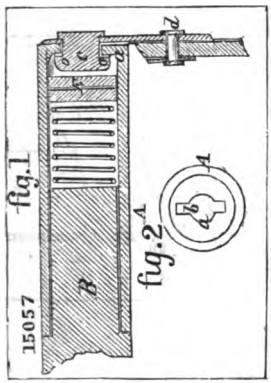

16114

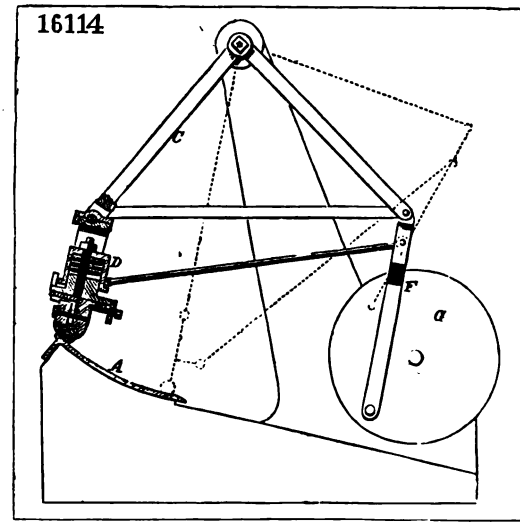

14477

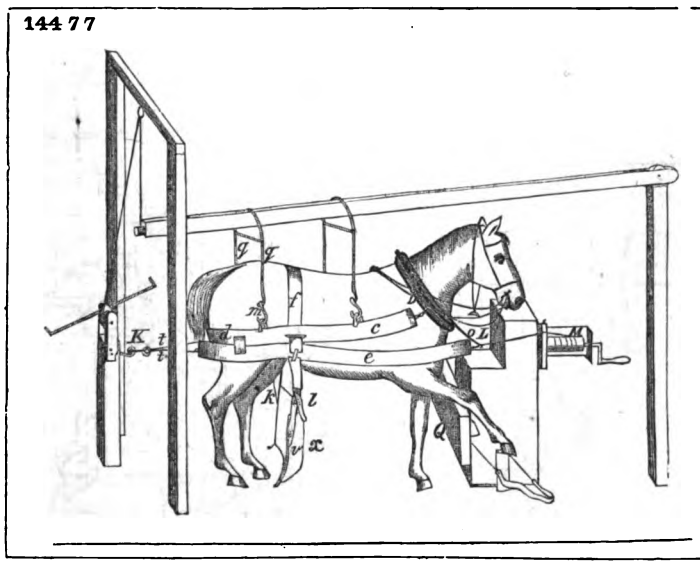

Digitized by Google

14490

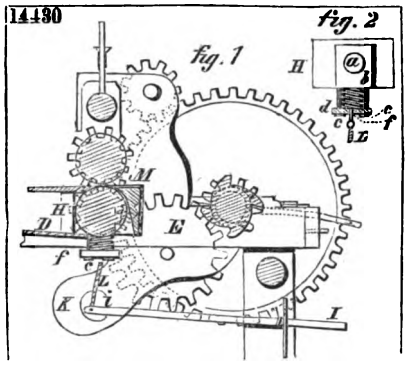

15207

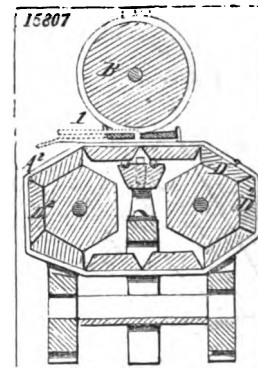

14606

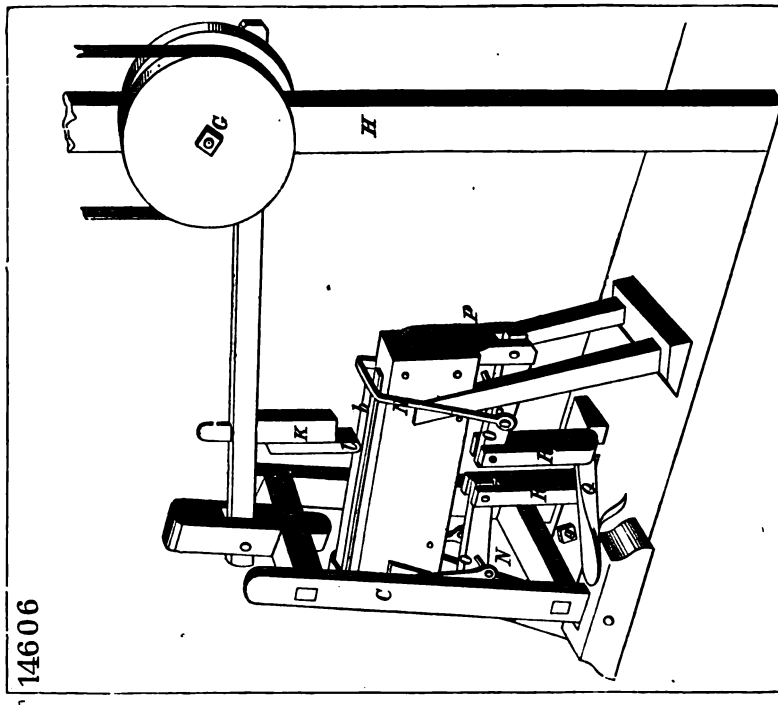

16205

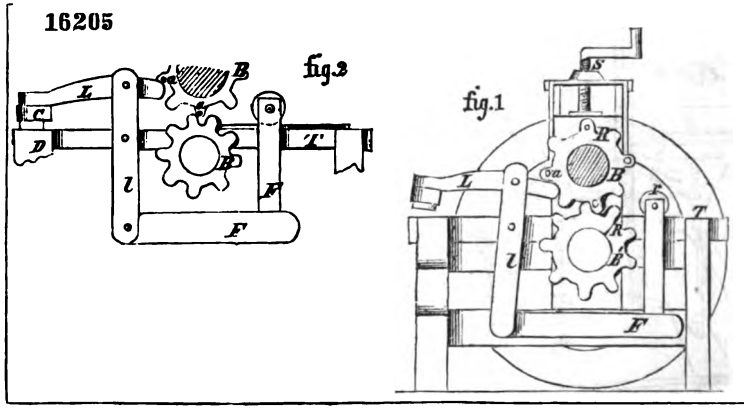

Digitized by Google

14698

14821

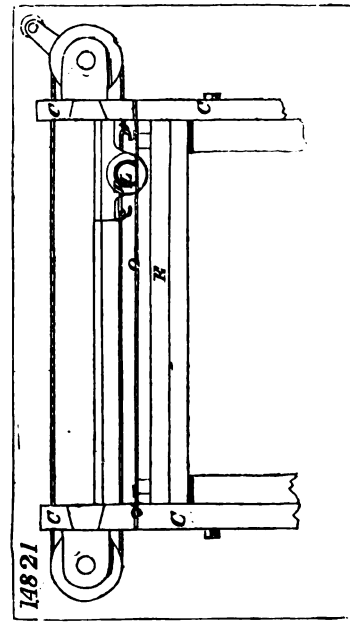

14211

fig. 1

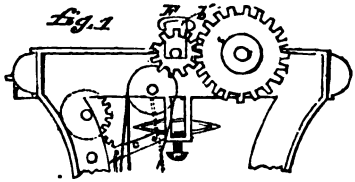

fig. 2

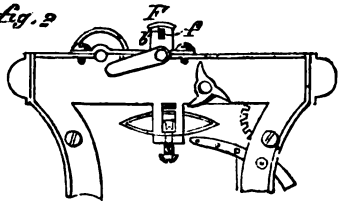

fig 3

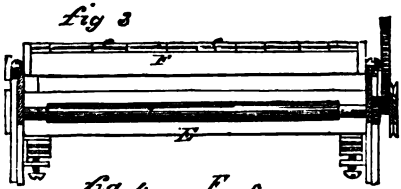

fig. 4.

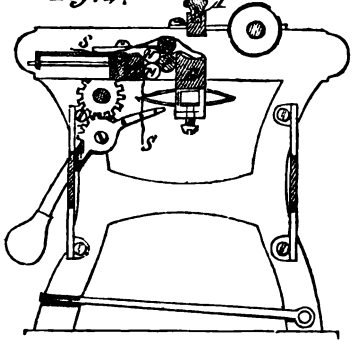

15462

fig. 1

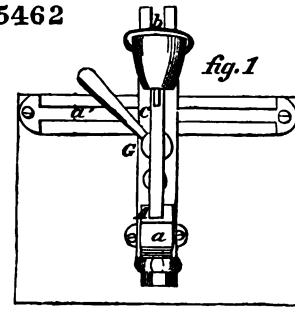

fig. 2

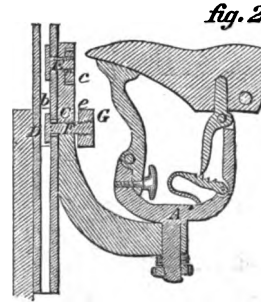

14534

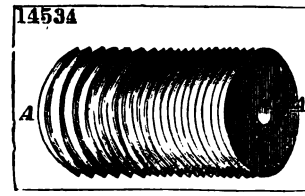

14490

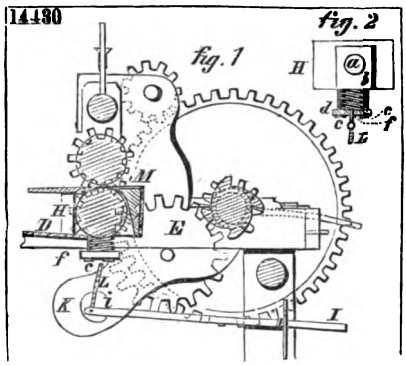

15207

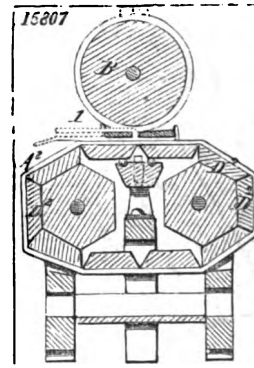

14606

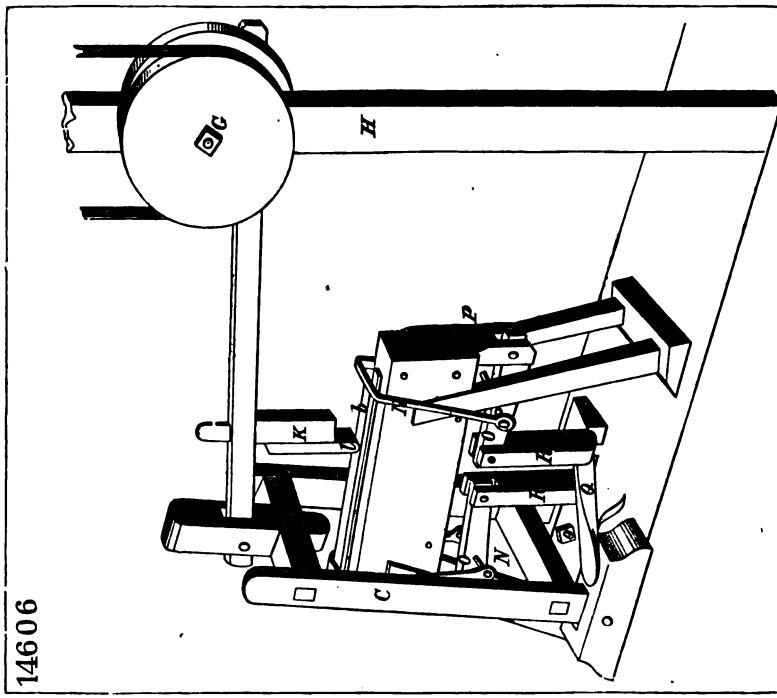

16205

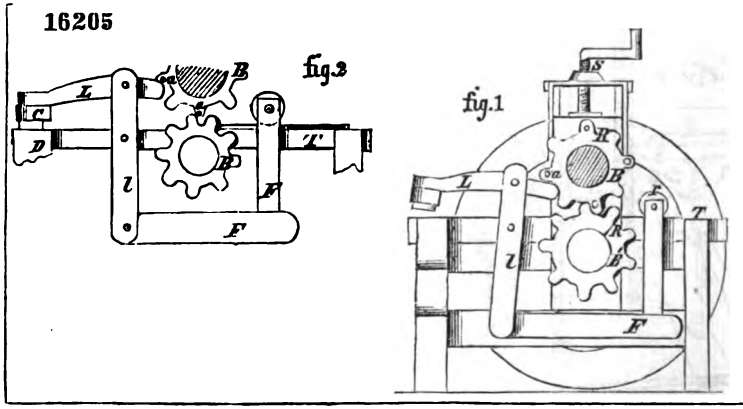

Digitized by Google

14698

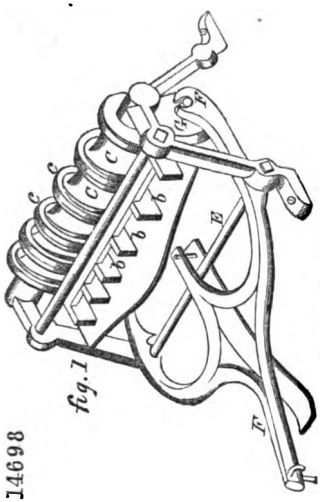

14821

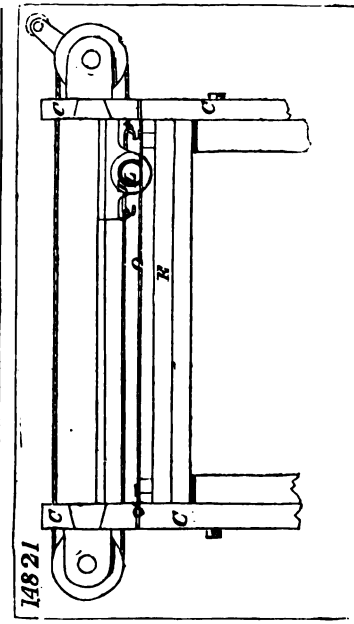

14211

fig. 1

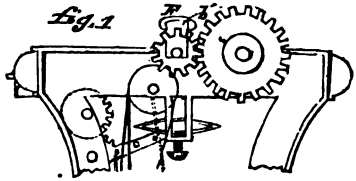

fig. 2

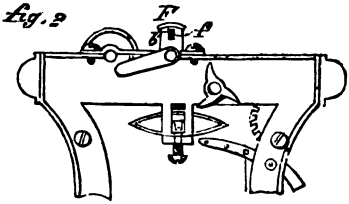

fig 3

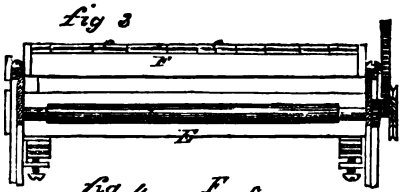

fig. 4.

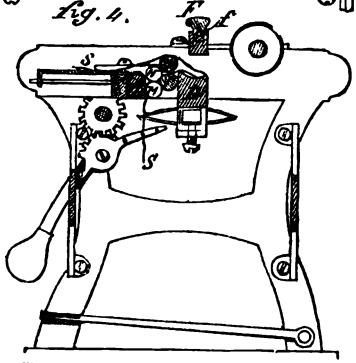

15462

fig. 1

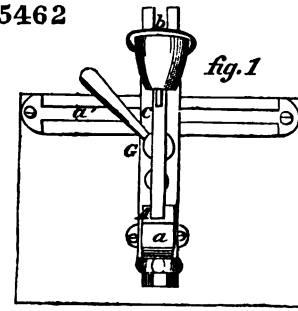

fig. 2

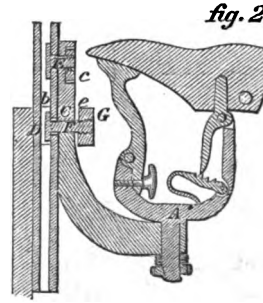

14534

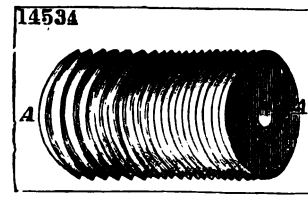

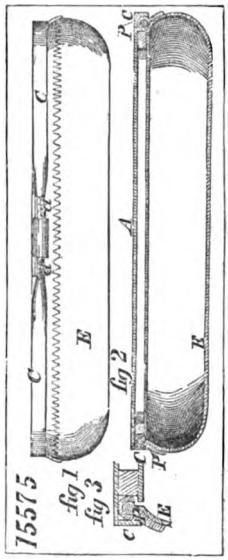

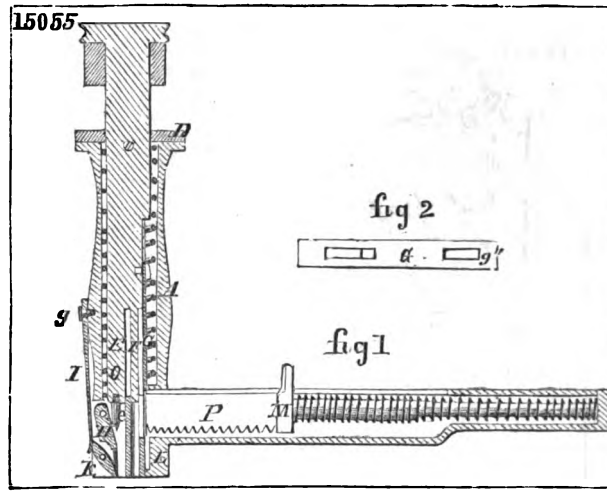

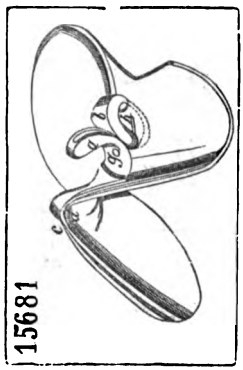

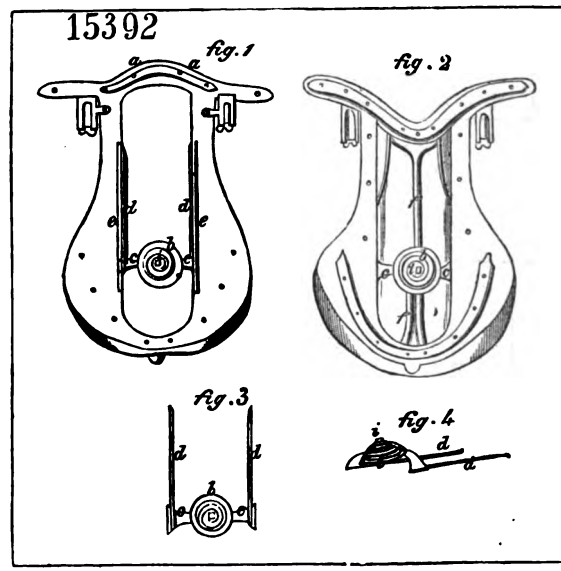

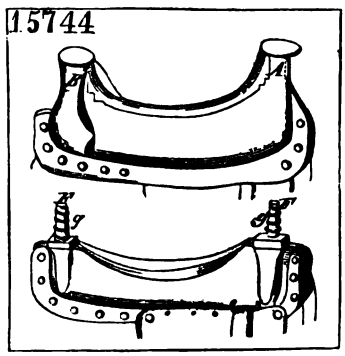

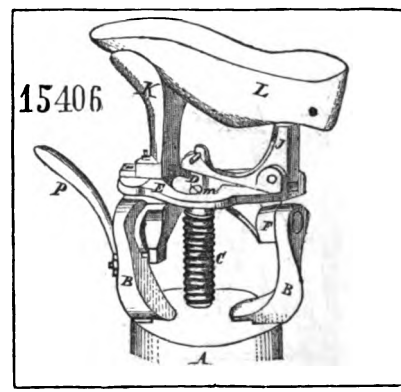

Digitized by Google

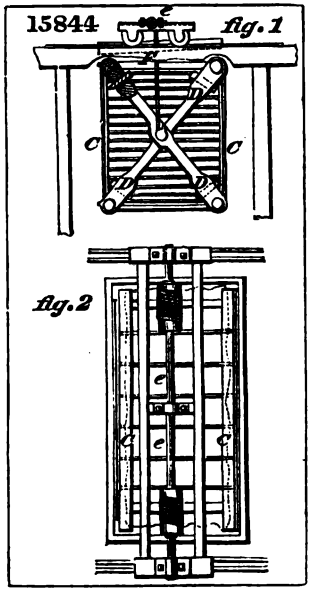

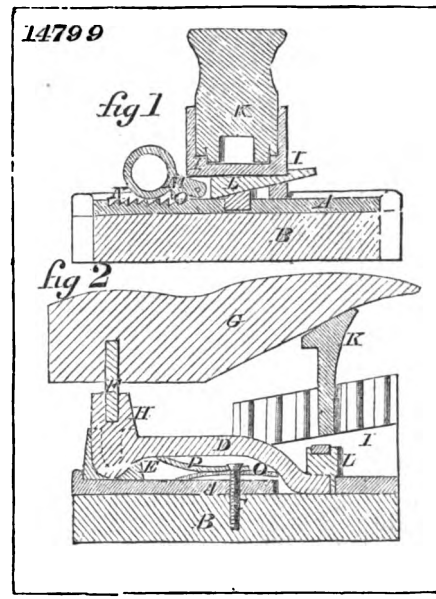

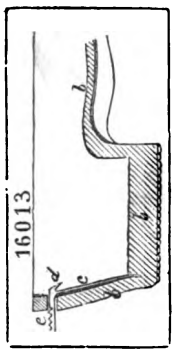

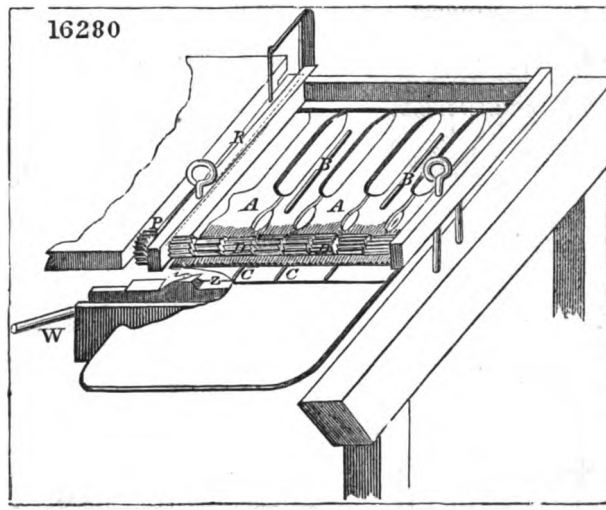

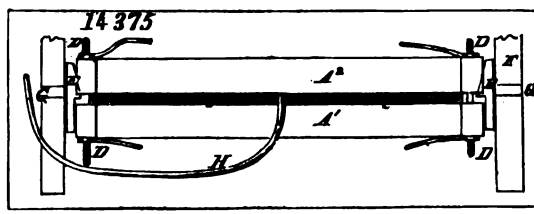

Digitized by Google

16032

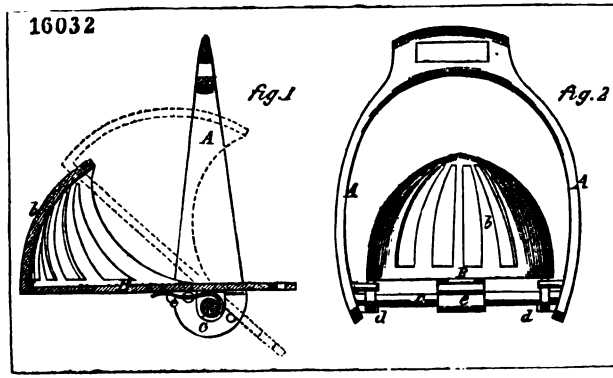

144,388

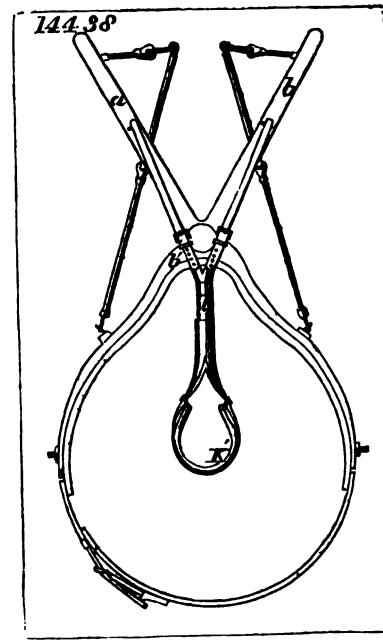

15176

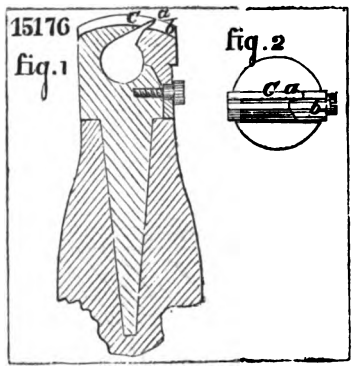

15072

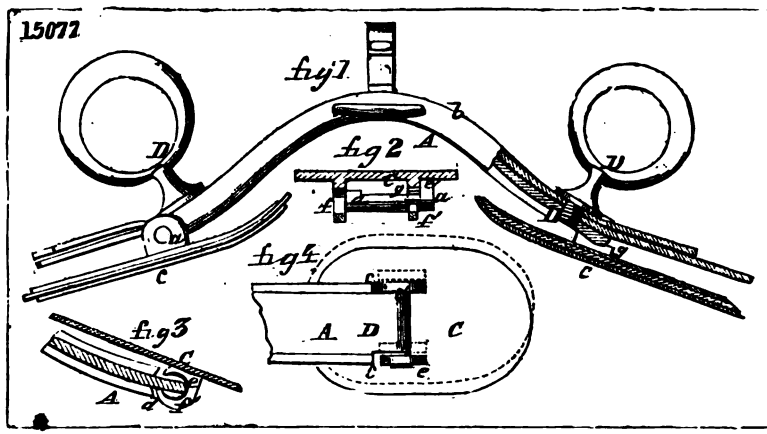

Digitized by Google

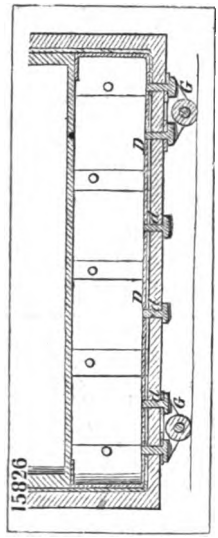

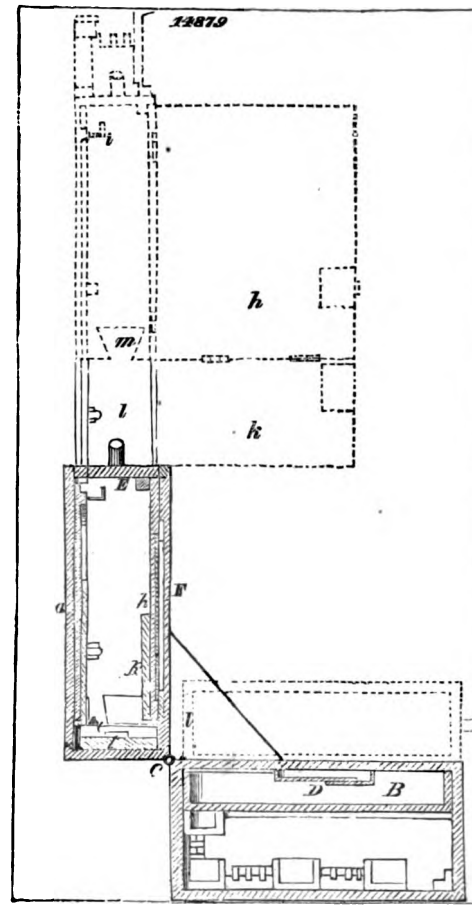

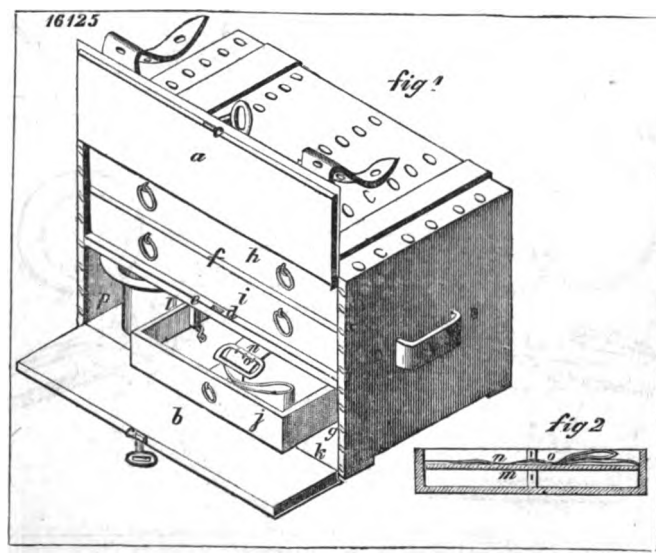

Digitized by Google

15683

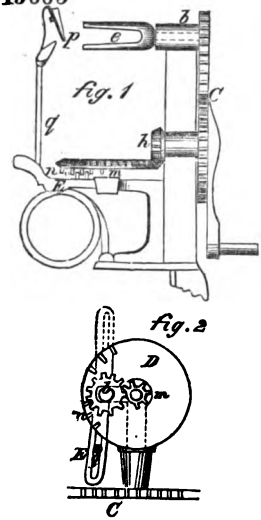

15625

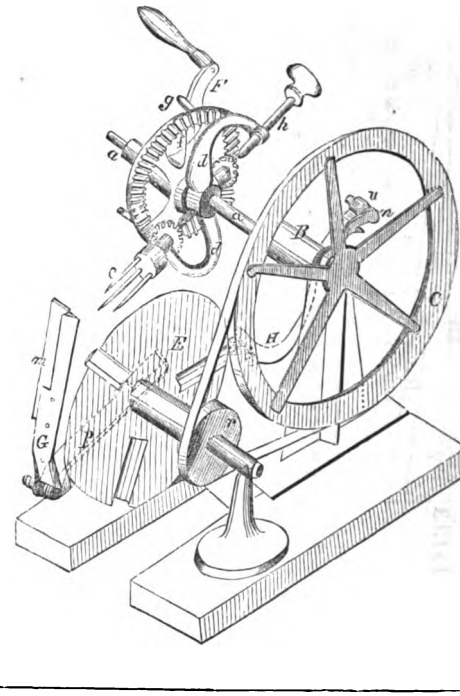

14800

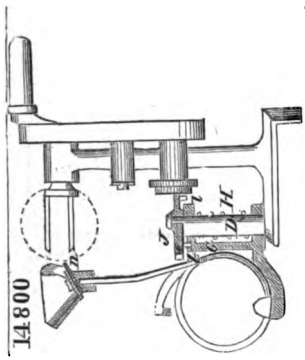

14775

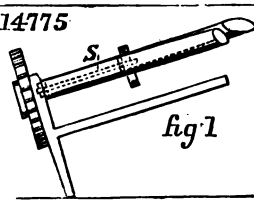

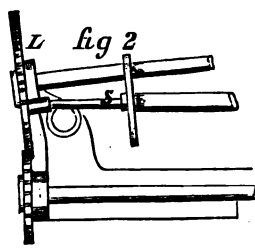

15603

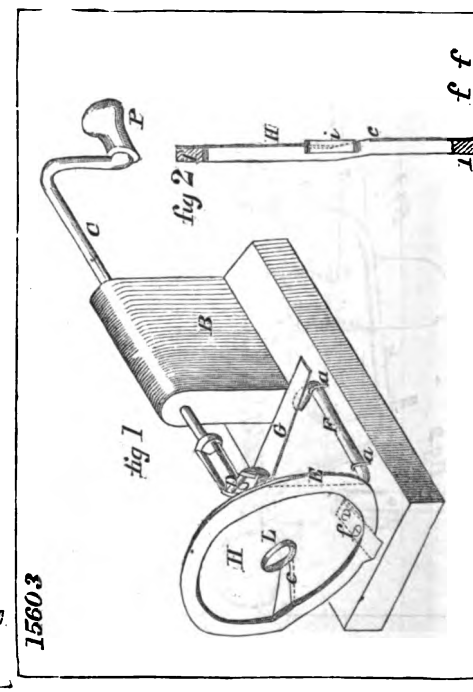

Digitized by Google

15224

fig 1

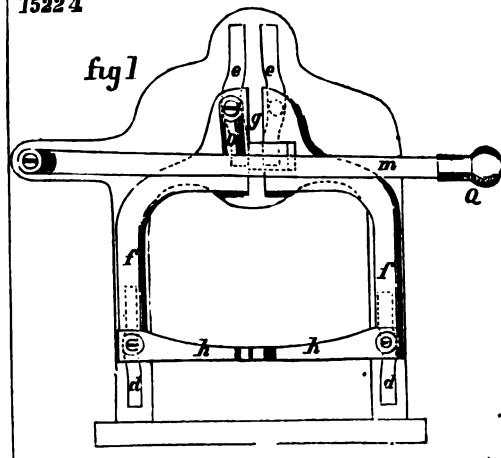

fig 2

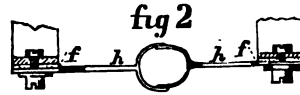

15133

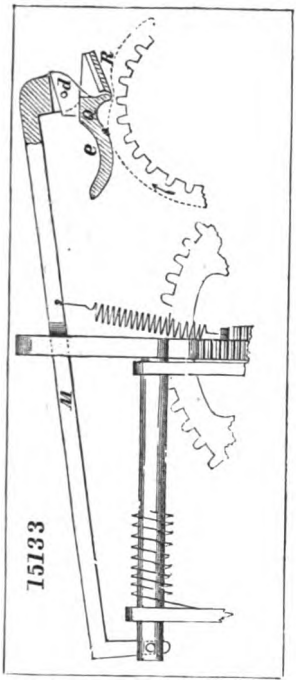

15148

fig. 1

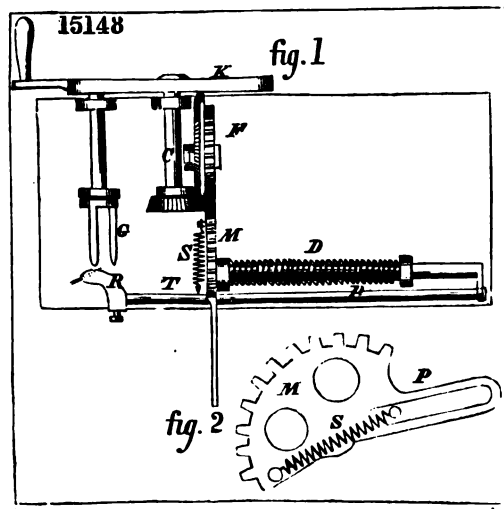

fig. 2

16080

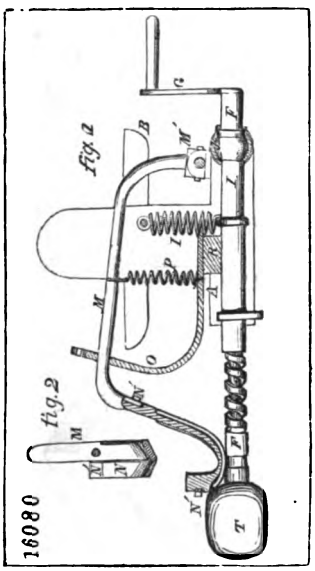

fig. 2

fig. 2

16240

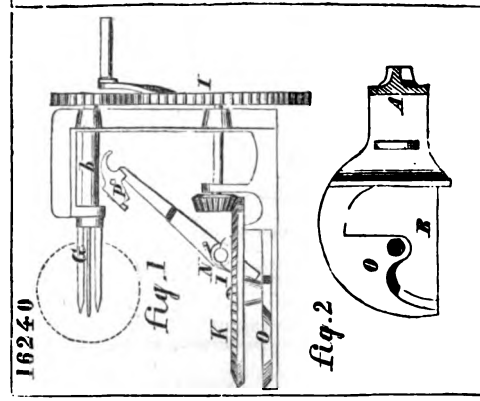

fig. 1

fig. 2

Digitized by Google

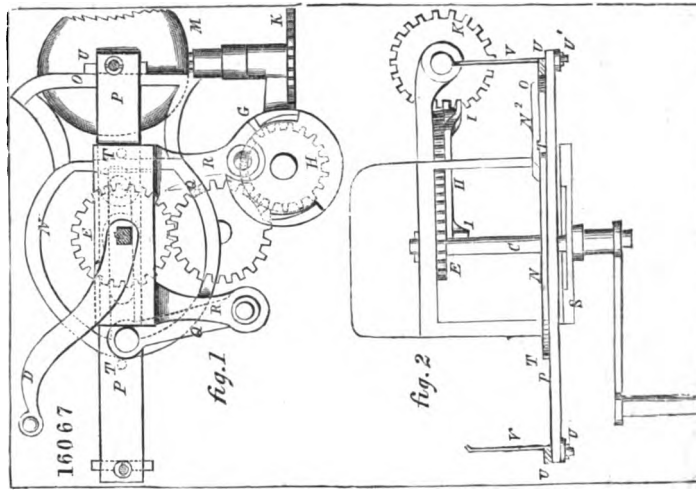

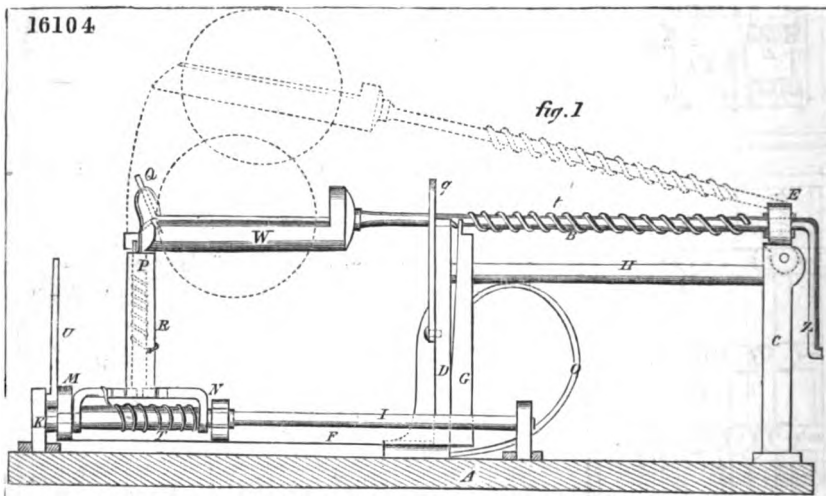

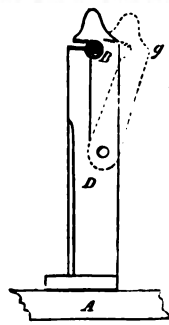

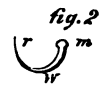

Digitized by Google

15127

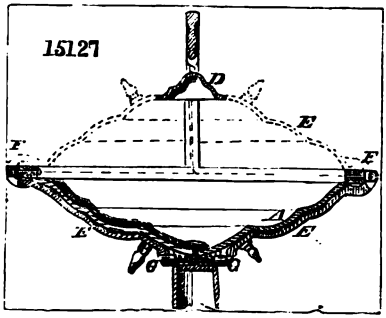

16150

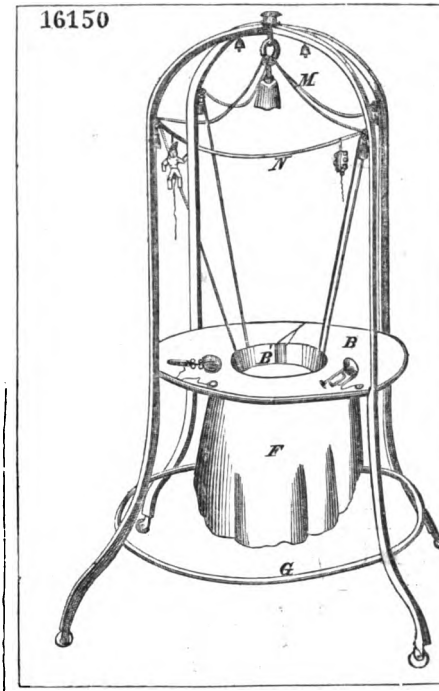

15900

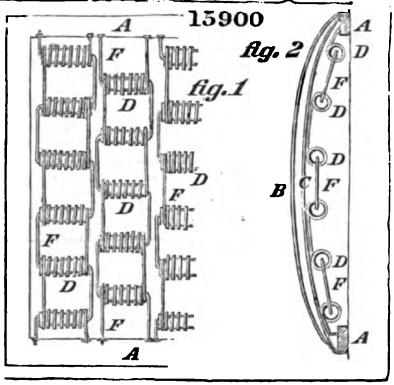

15609

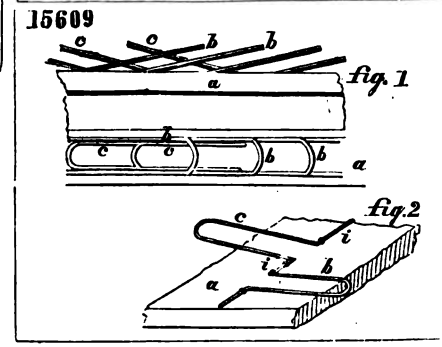

16310

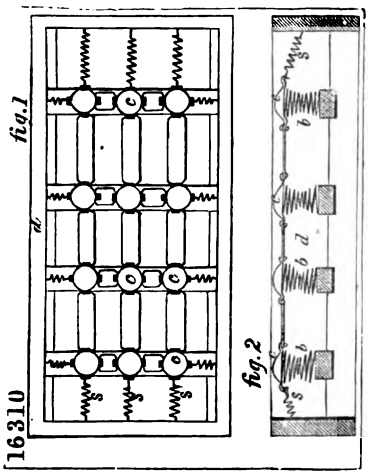

15240

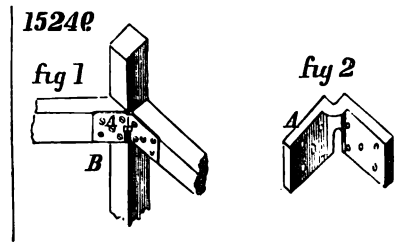

14574

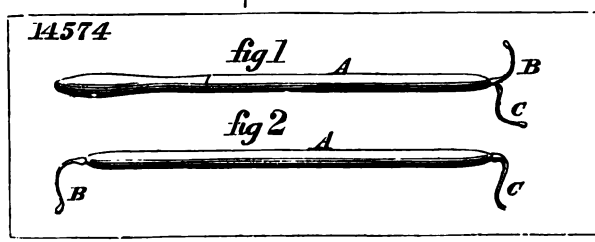

Digitized by Google

15621

fig 1

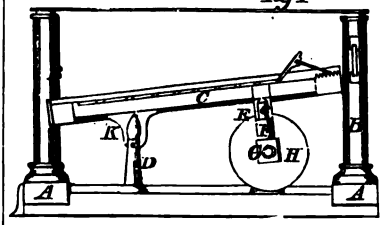

fig 2

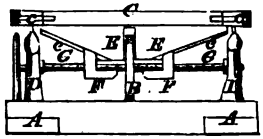

14660

fig 2

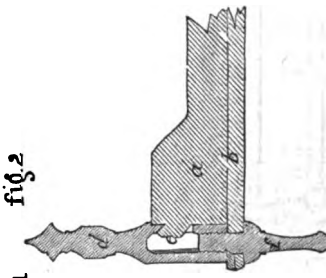

fig 1

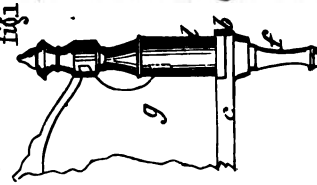

16276

fig 2

fig 3

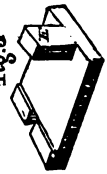

fig 1

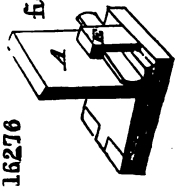

16093

fig. 1

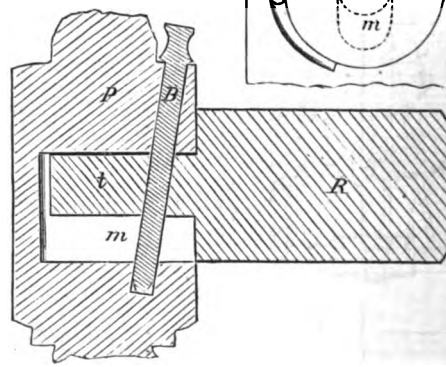

fig. 2

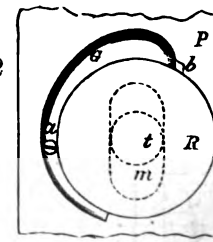

fig. 3

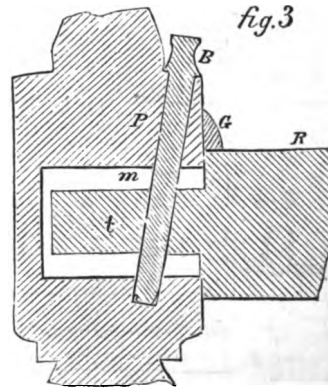

15076

fig 2

fig 1

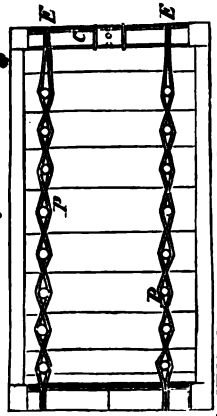

Digitized by Google

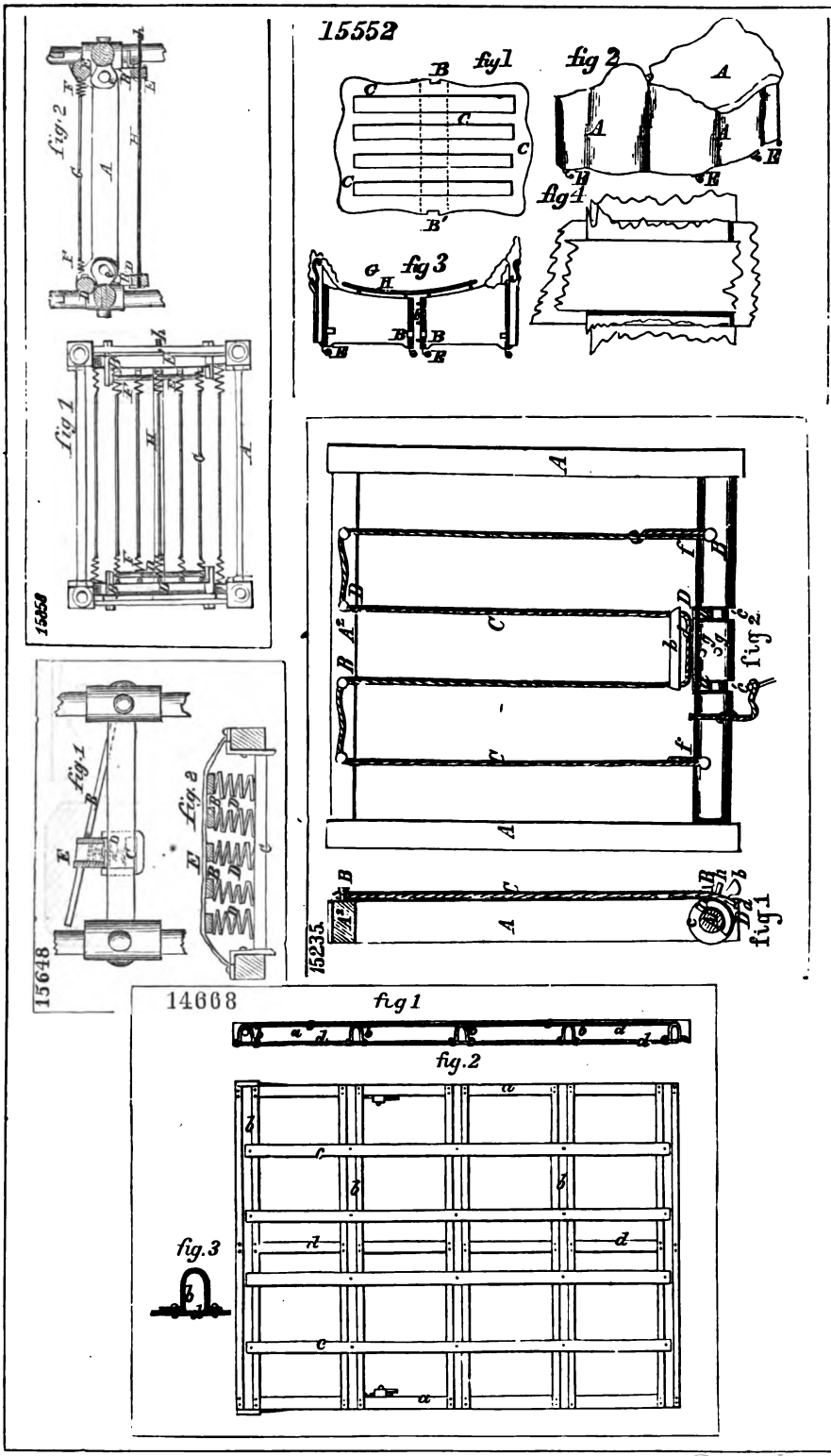

Digitized by Google

15702

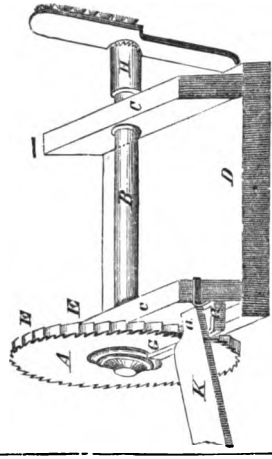

15209

fig 1

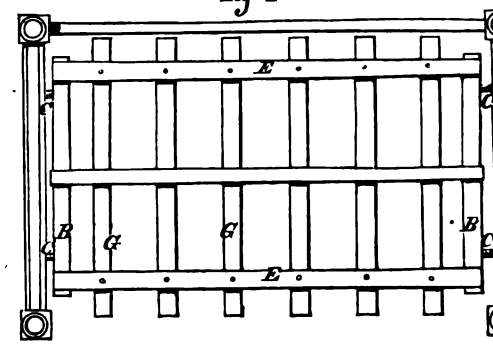

fig 2

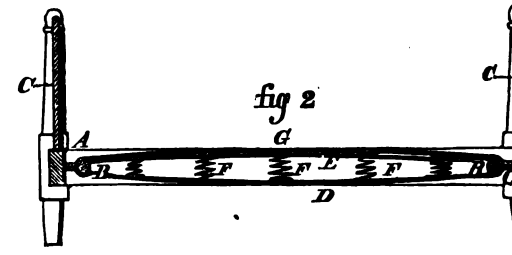

15573

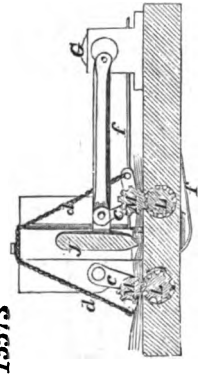

14514

fig.1

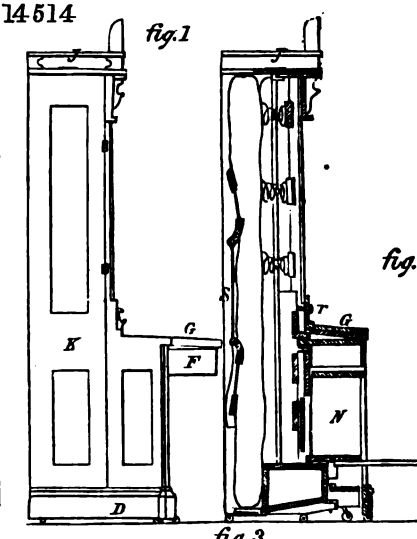

fig.2

fig.3

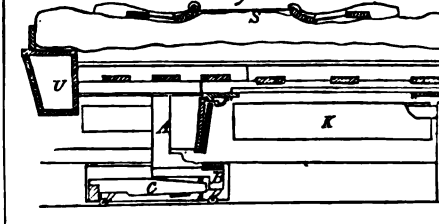

14888

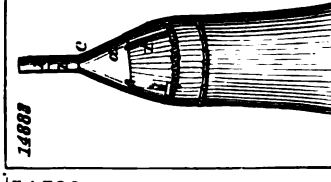

14593

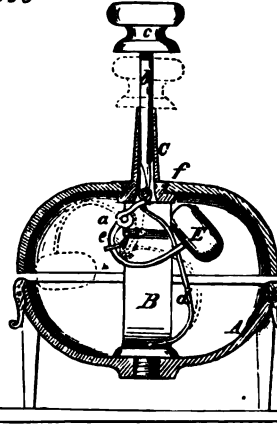

Digitized by Google

14245

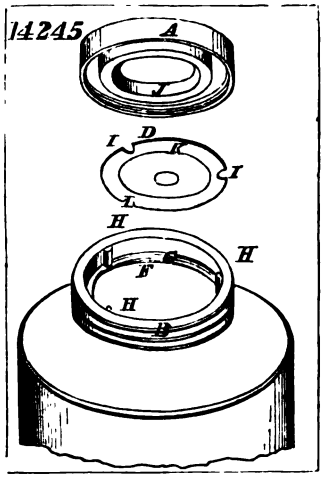

16126

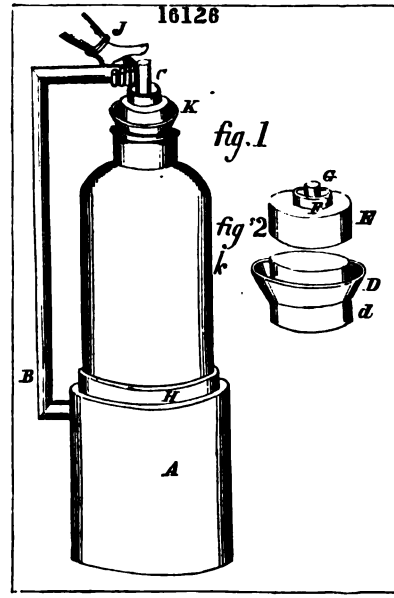

15946.

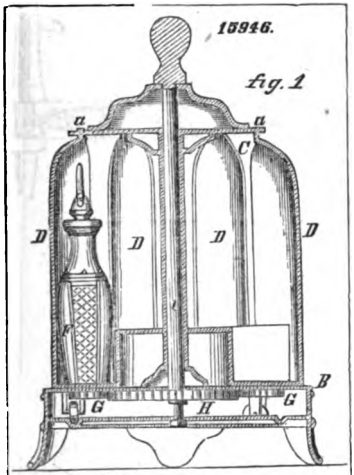

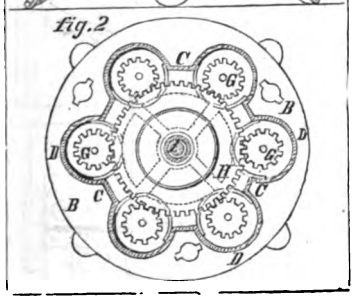

15088

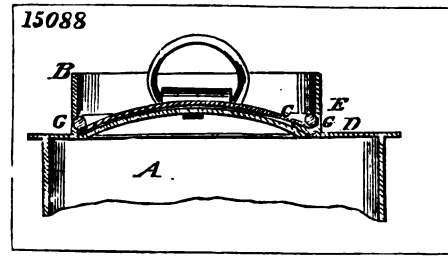

15902

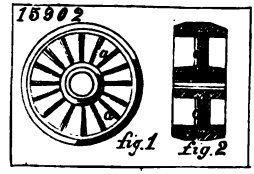

16036

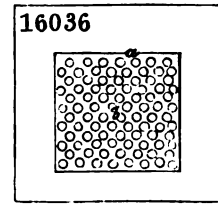

14439

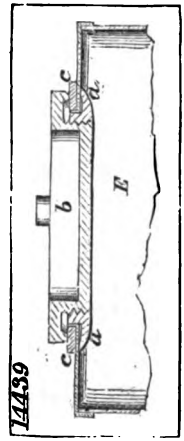

15478

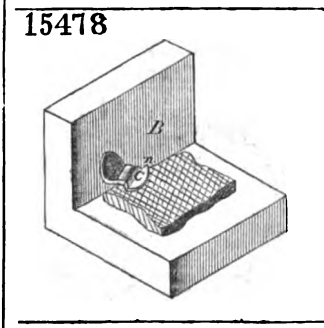

15611

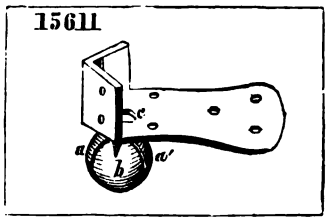

Digitized by Google

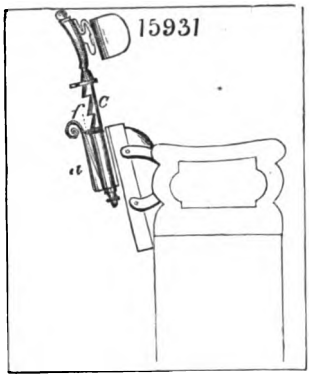

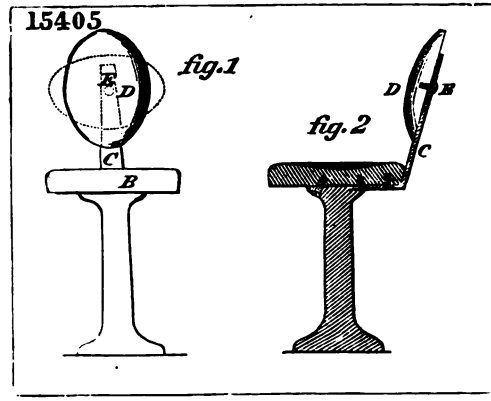

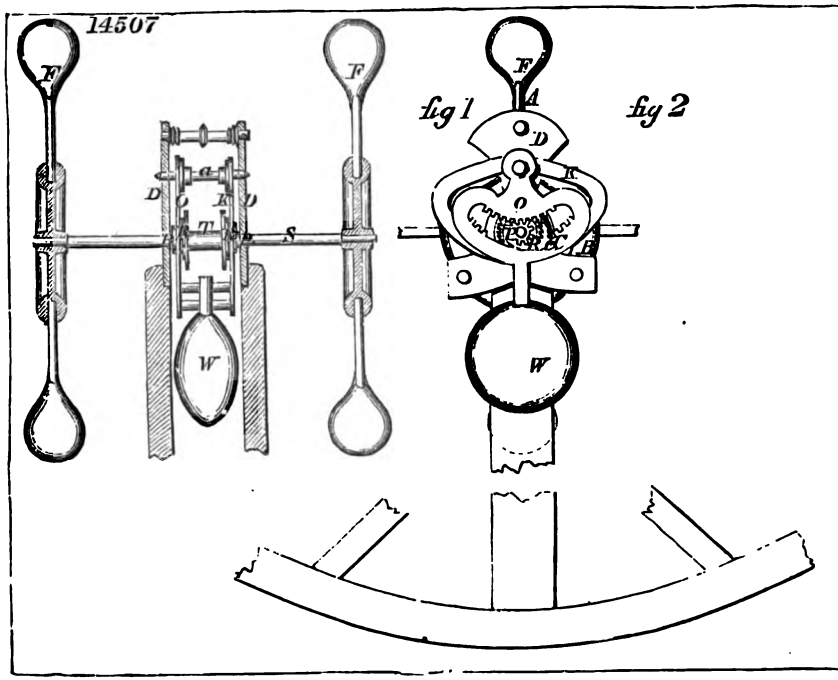

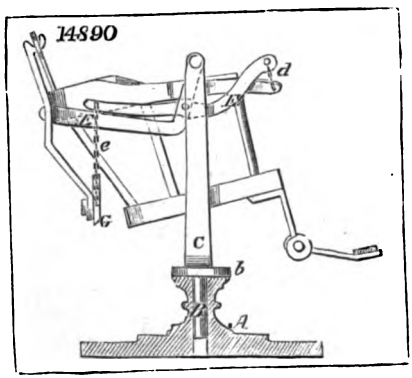

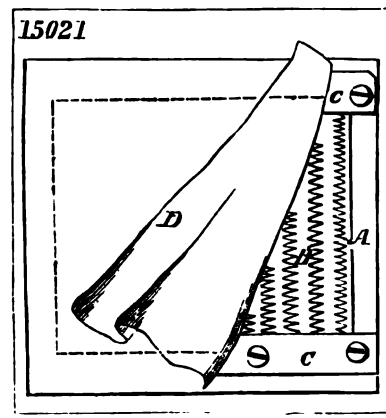

Digitized by Google

14506

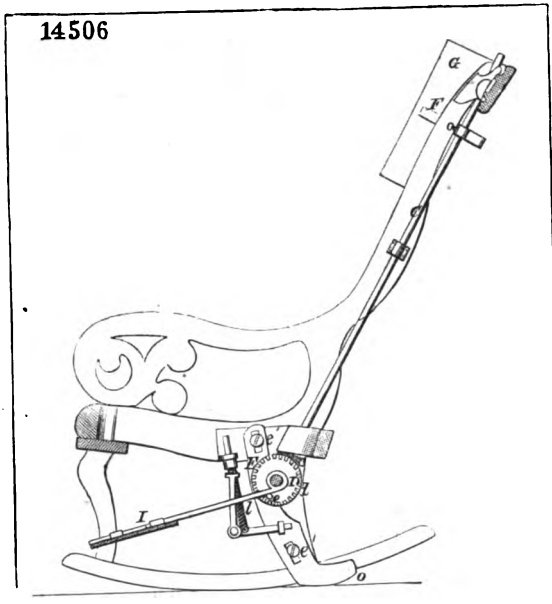

14872

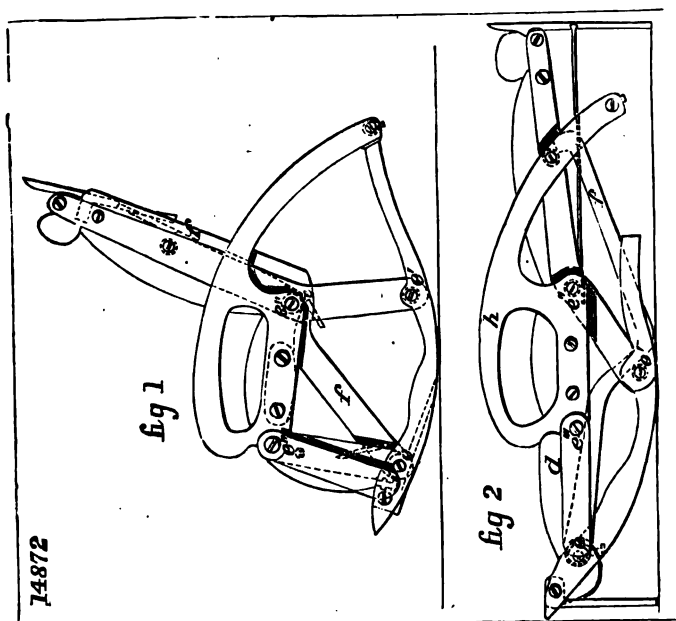

14877

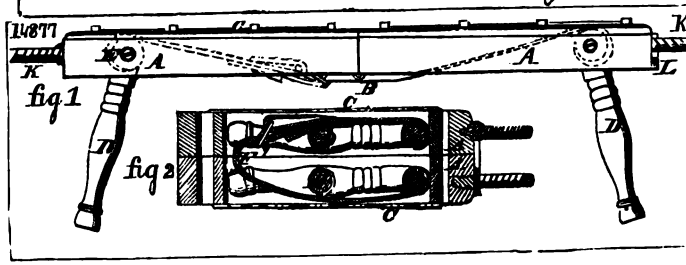

Digitized by Google

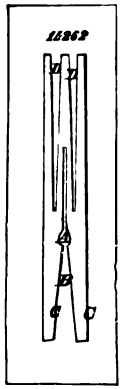

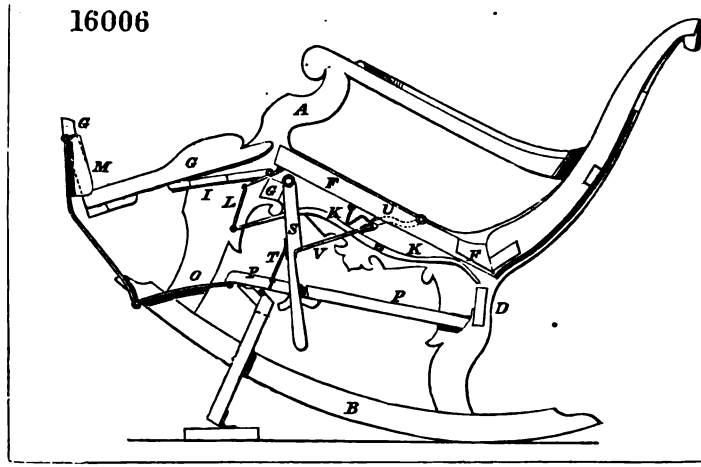

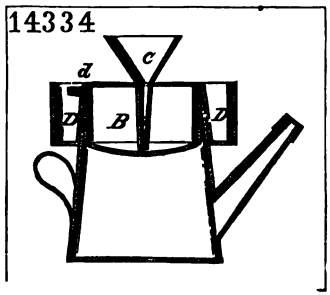

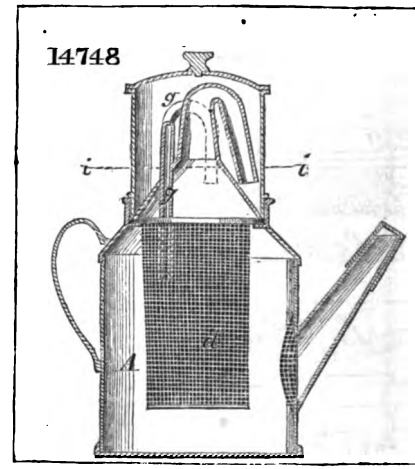

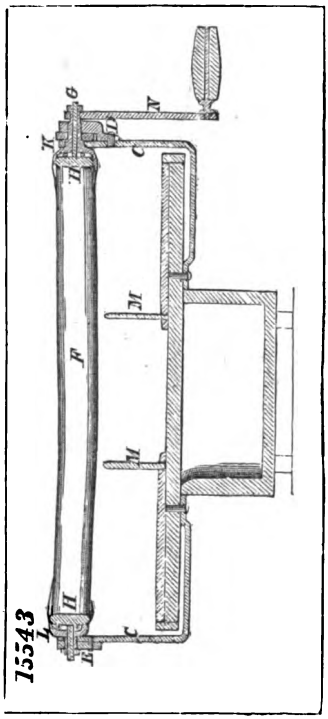

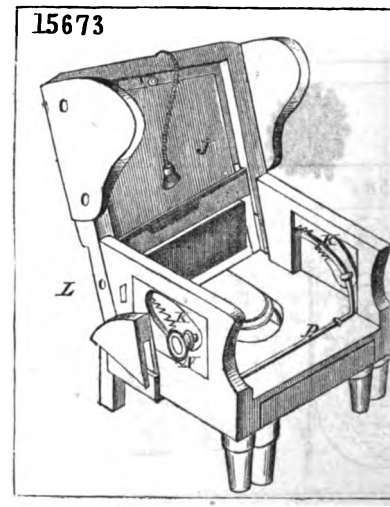

Digitized by Google

15615

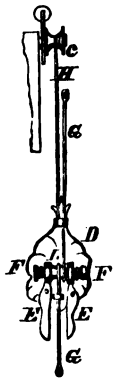

14410

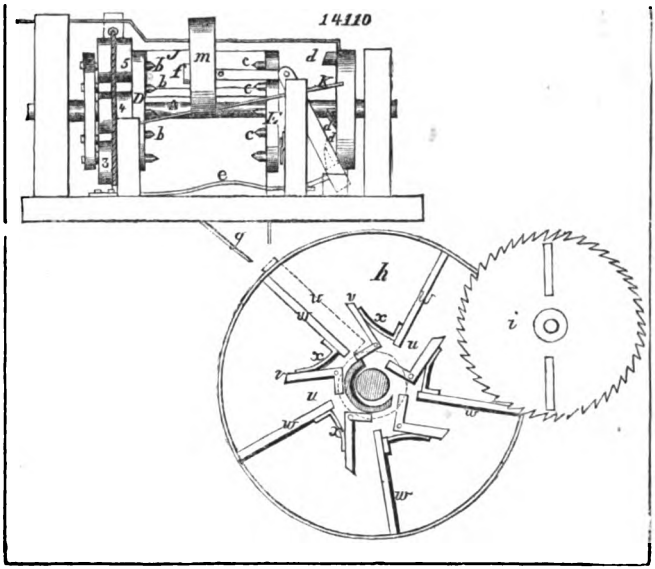

14259

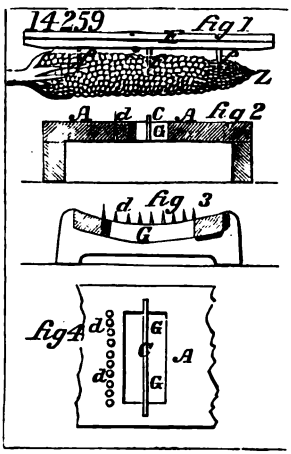

14466

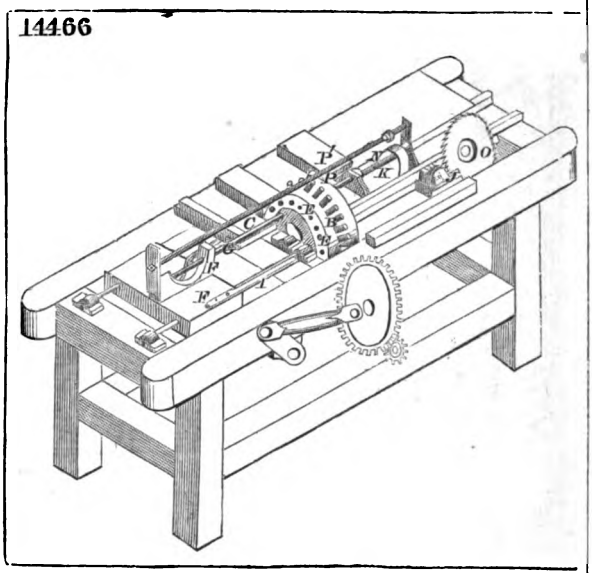

15258

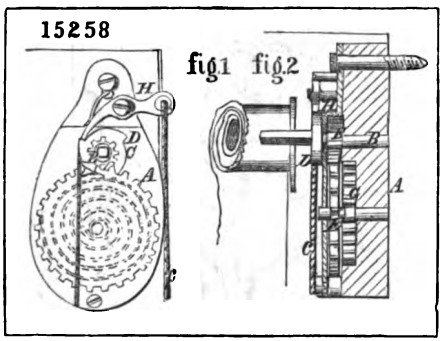

F.15835

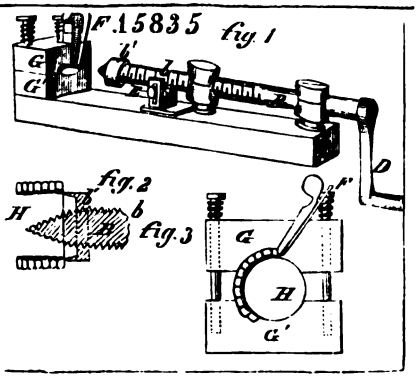

Digitized by Google

14886

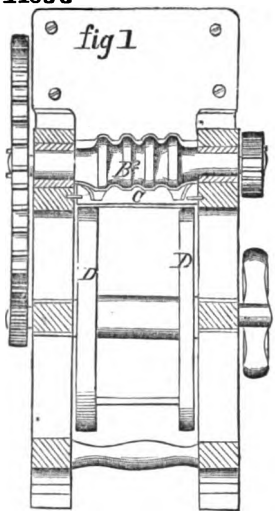

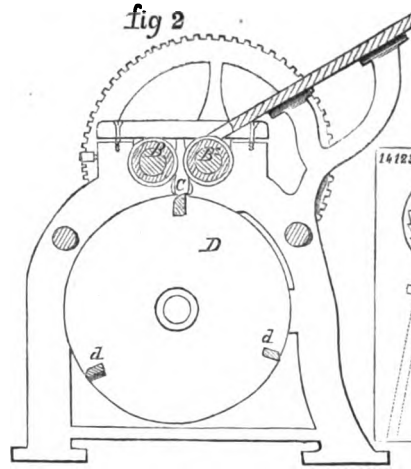

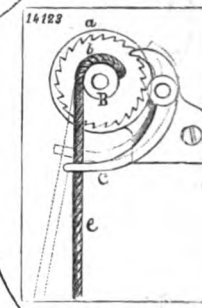

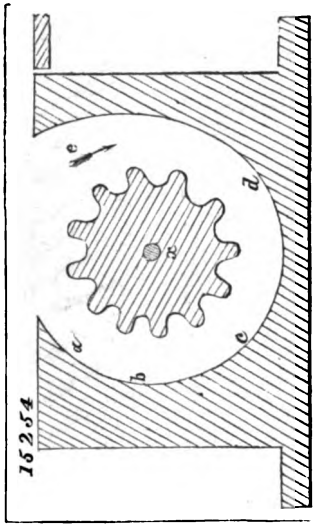

16065

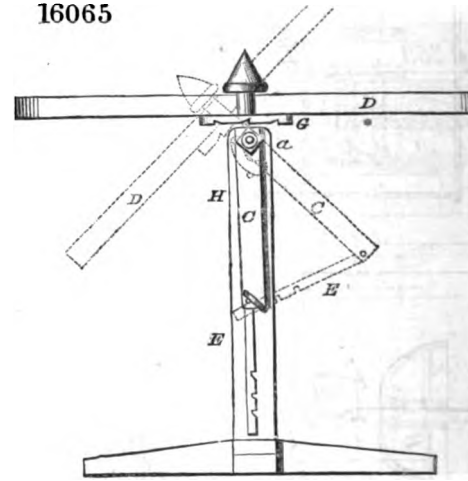

15873

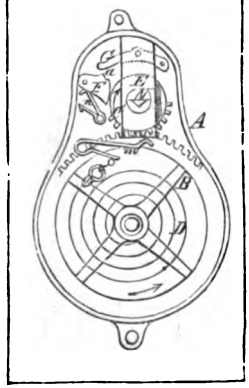

14855

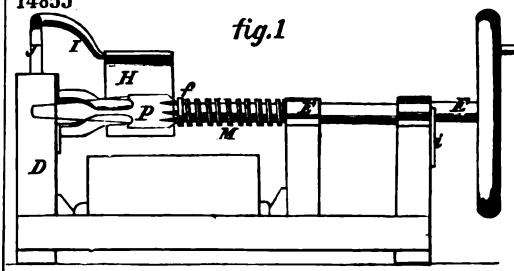

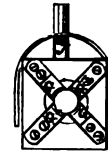

Digitized by Google

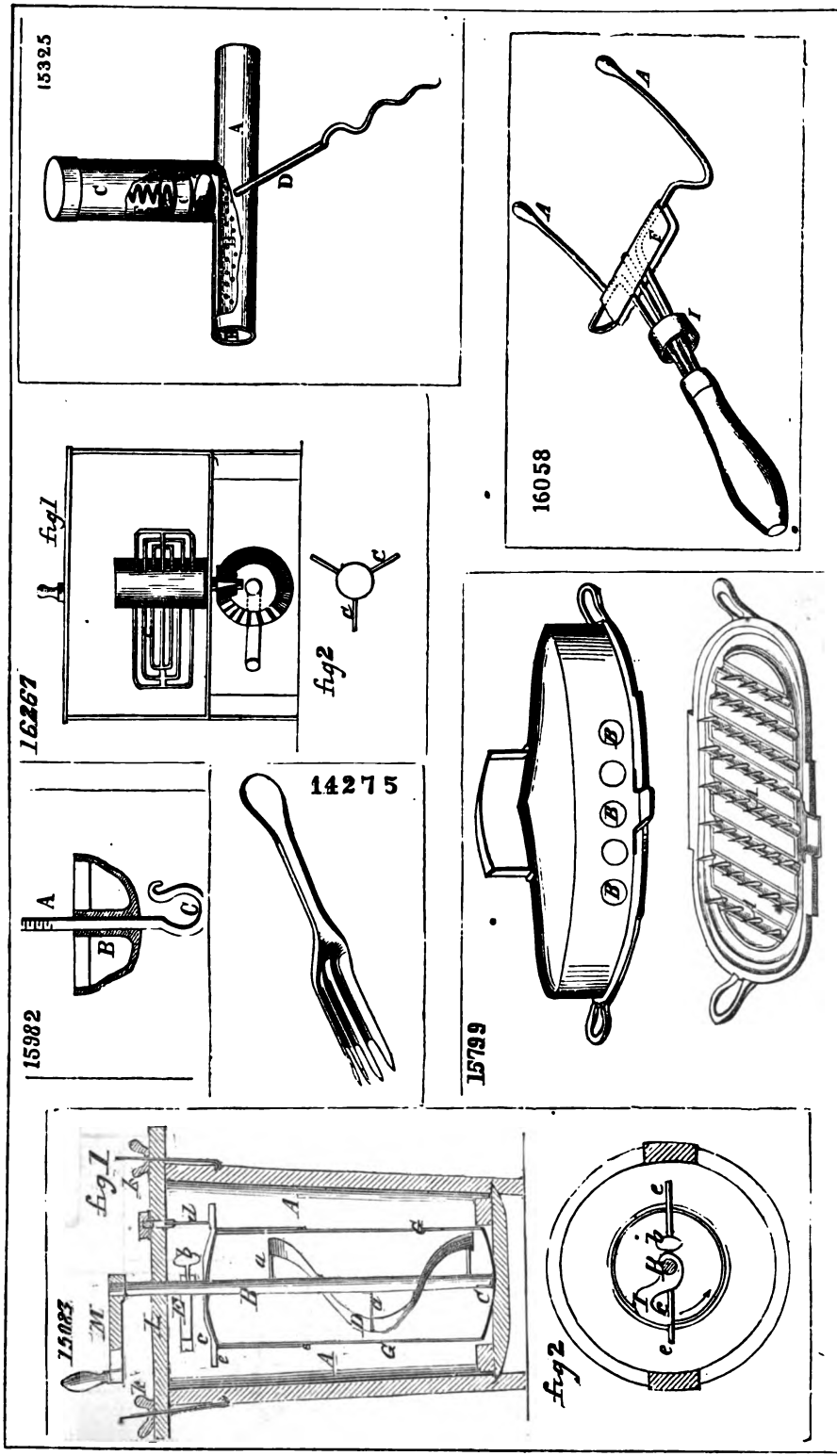

Digitized by Google

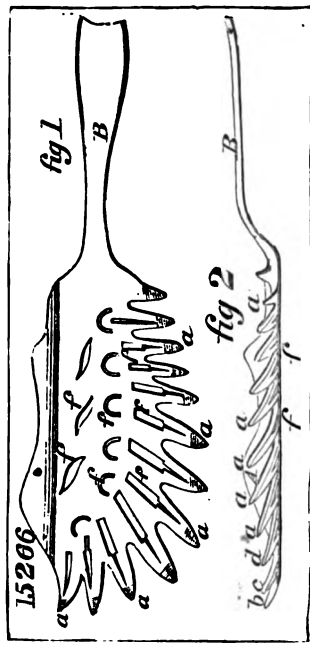

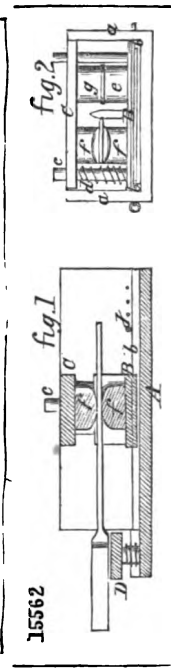

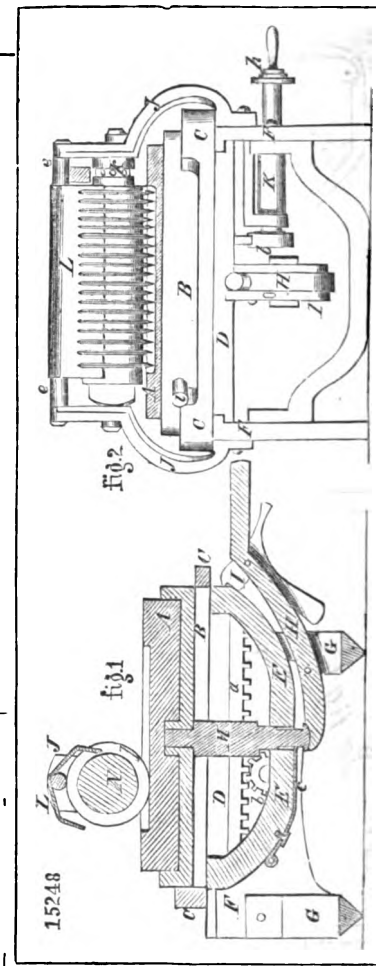

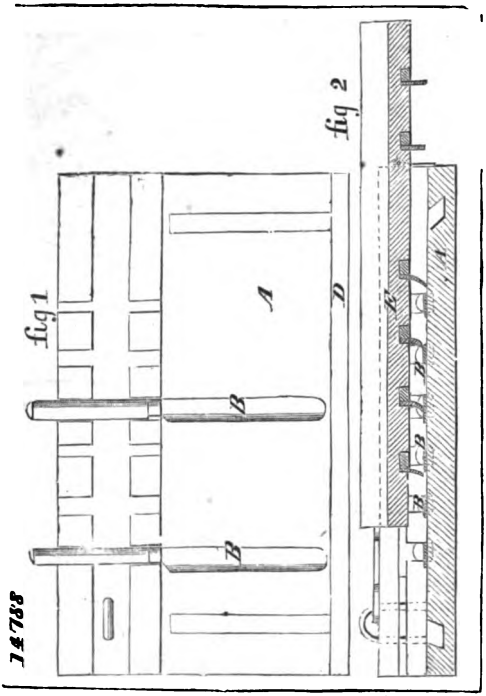

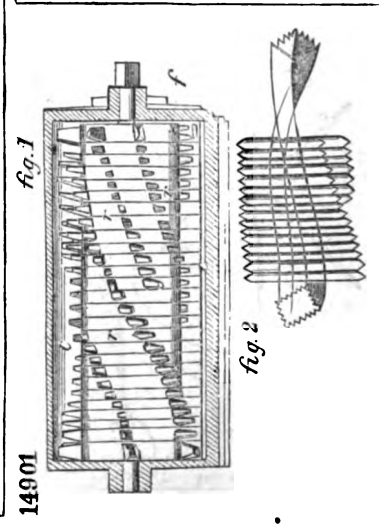

Digitized by Google

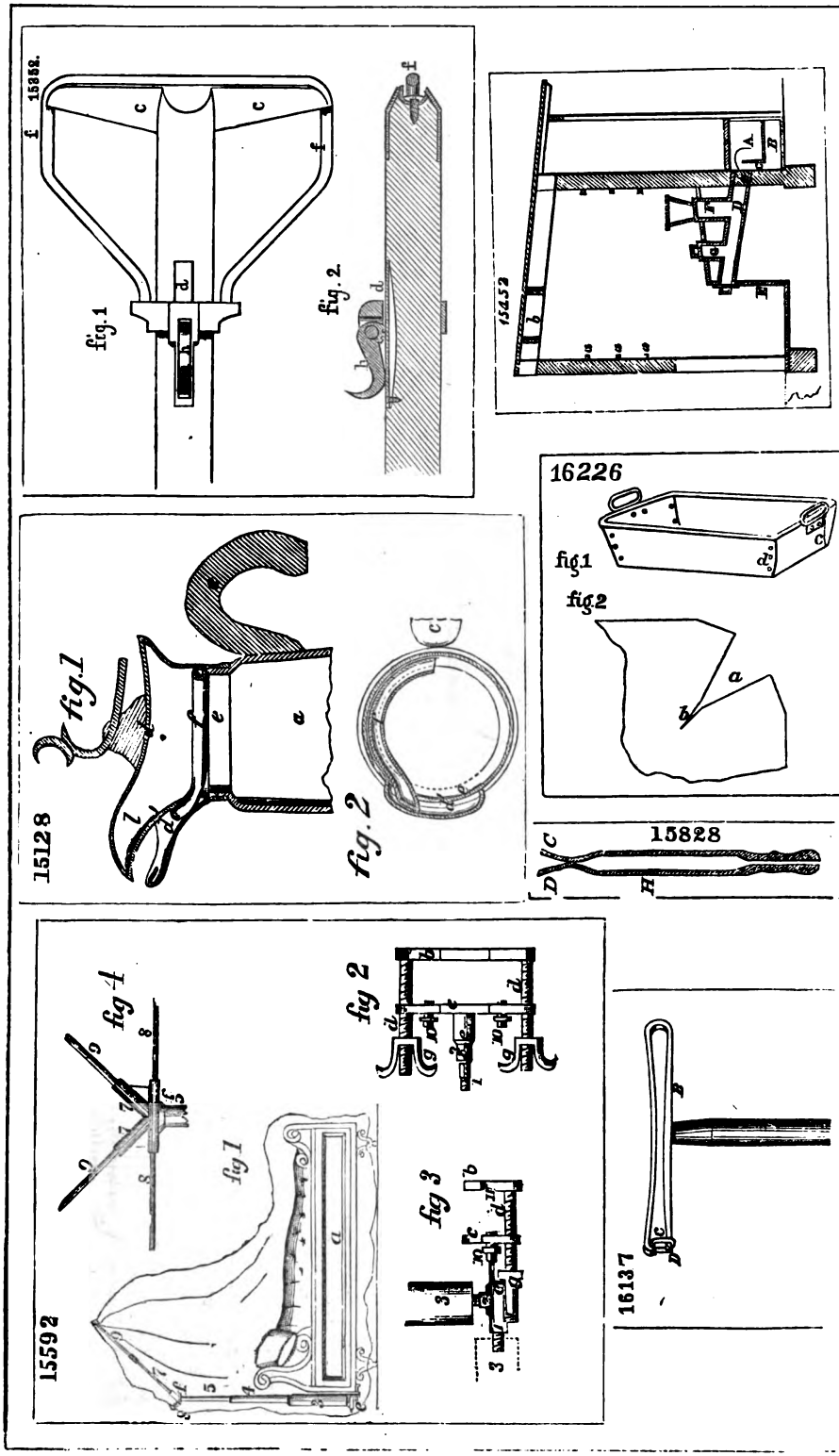

Digitized by Google

14974

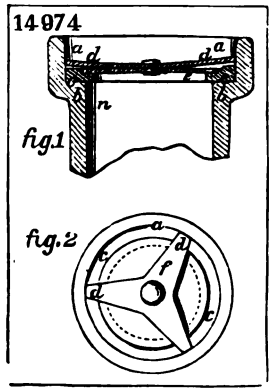

15231

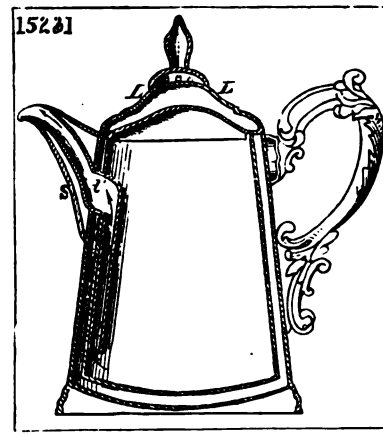

15450

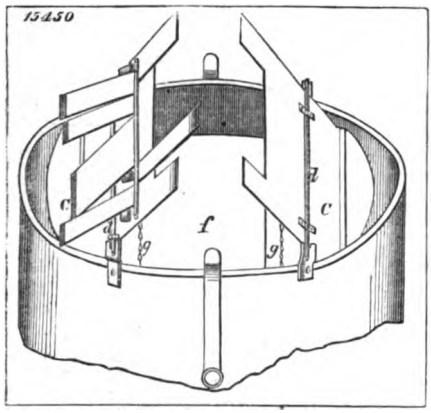

15132

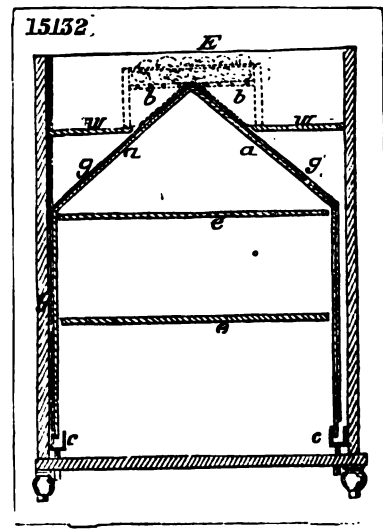

14219

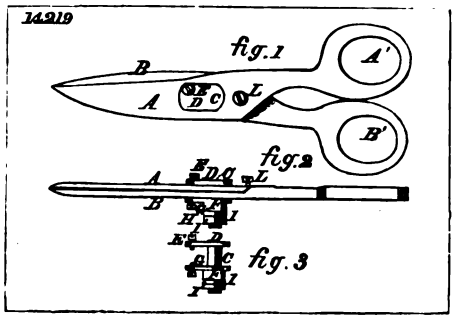

15545

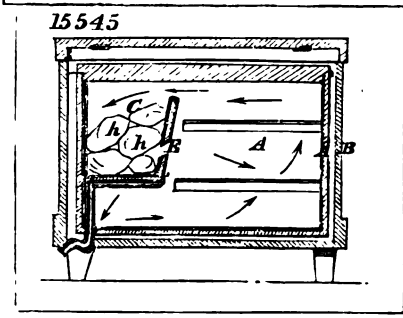

16320

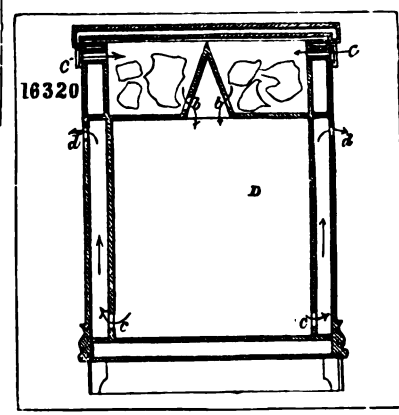

Digitized by Google

14672

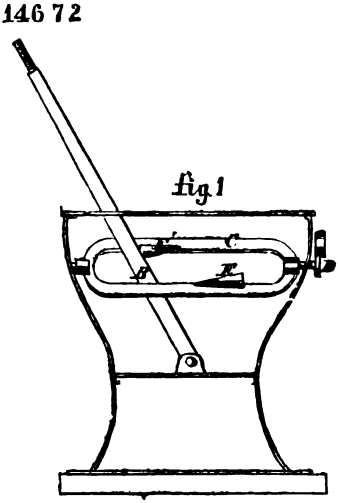

15723

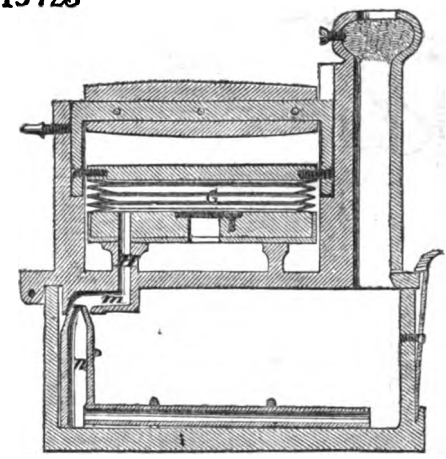

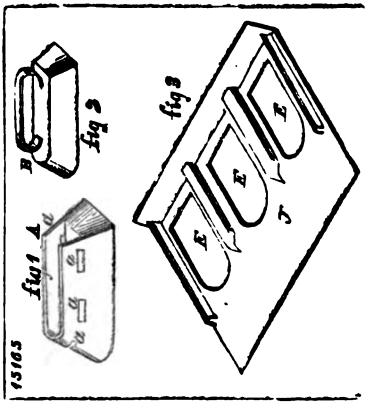

15143

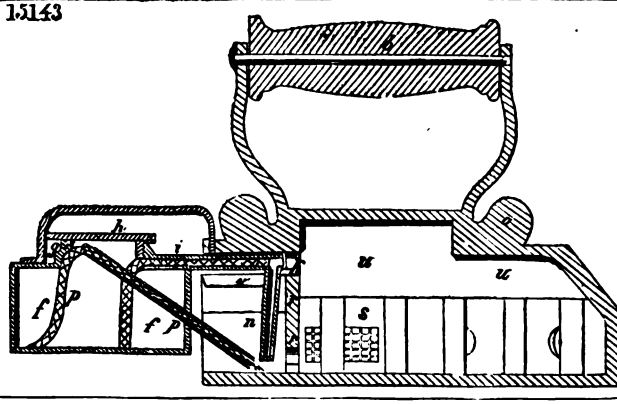

15675

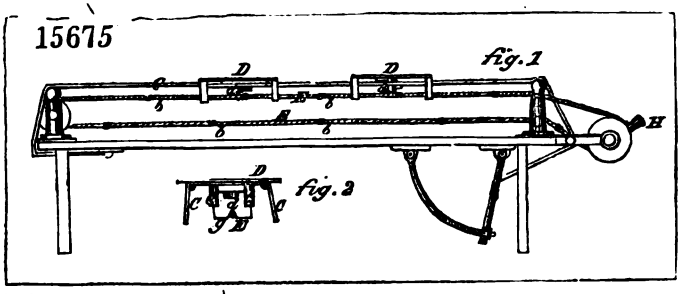

16254

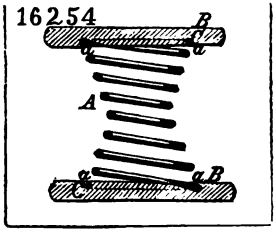

15801

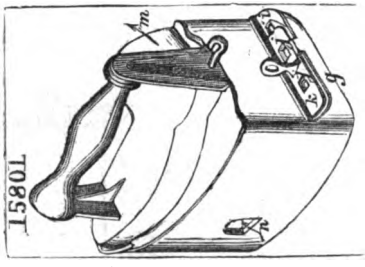

14796

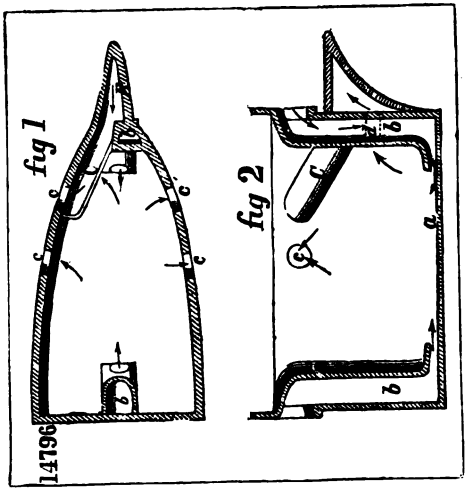

15943

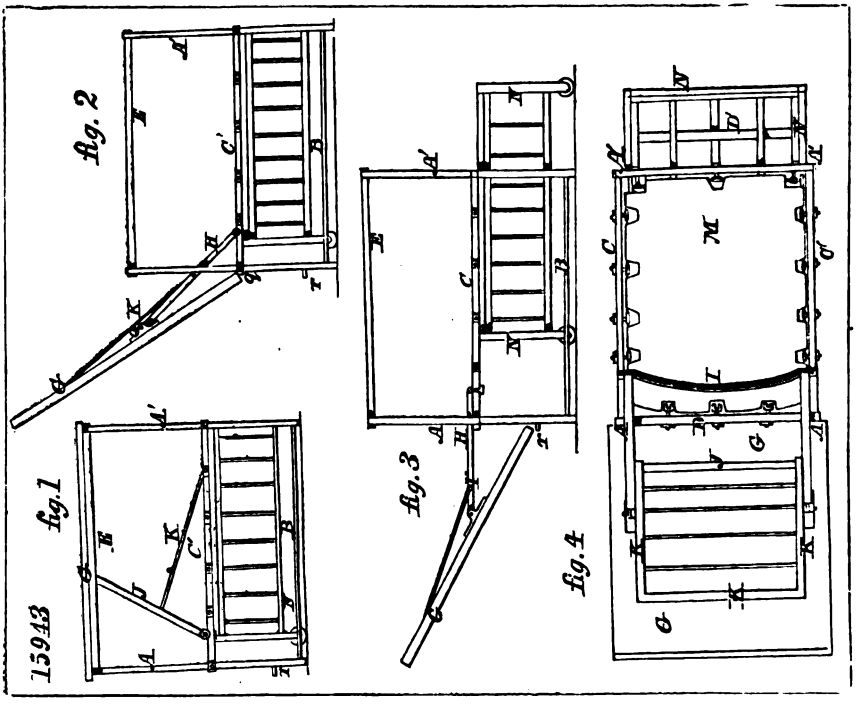

Digitized by Google

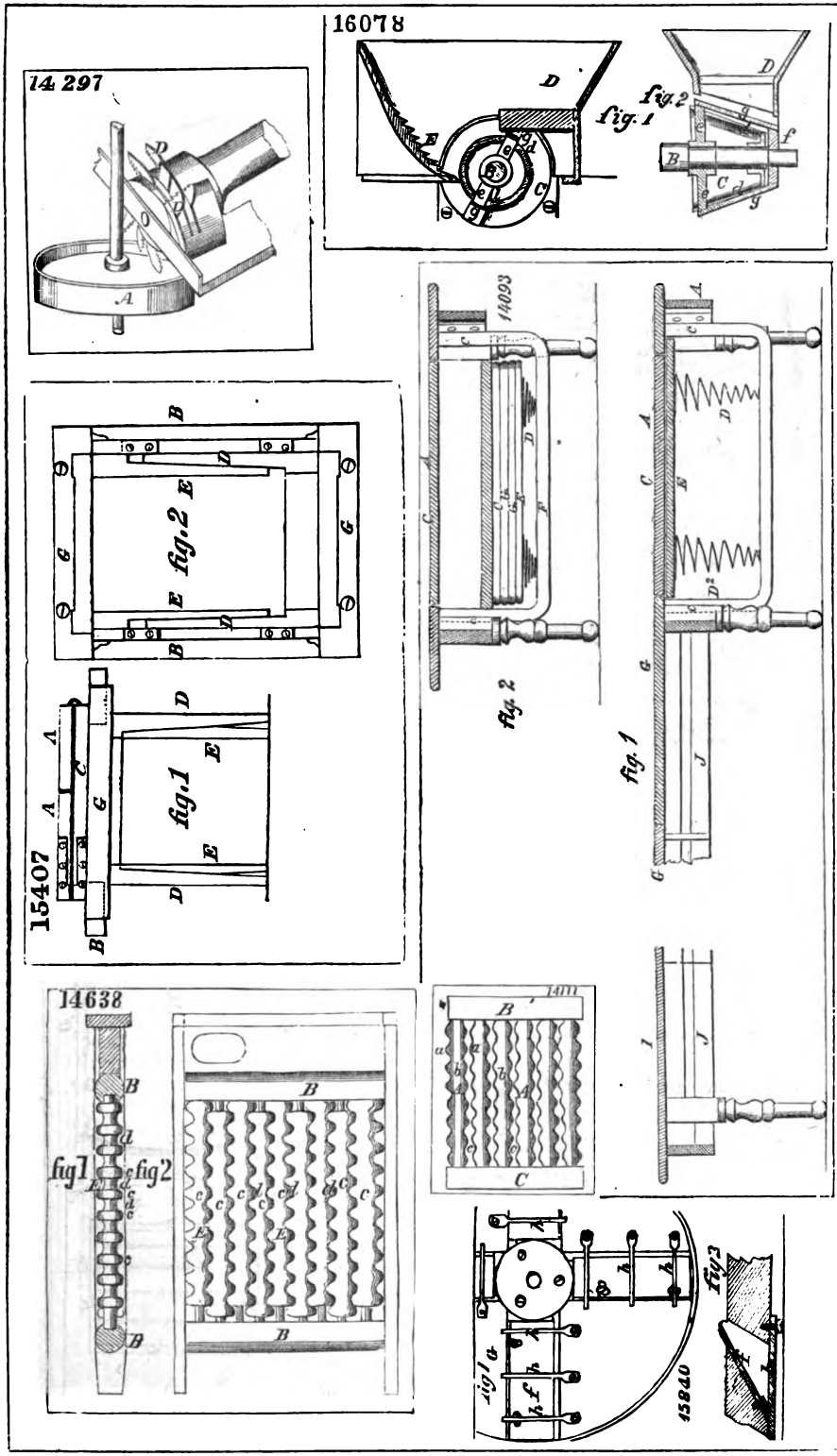

Digitized by Google

14391

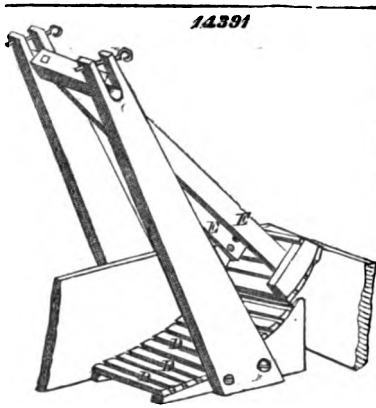

14869

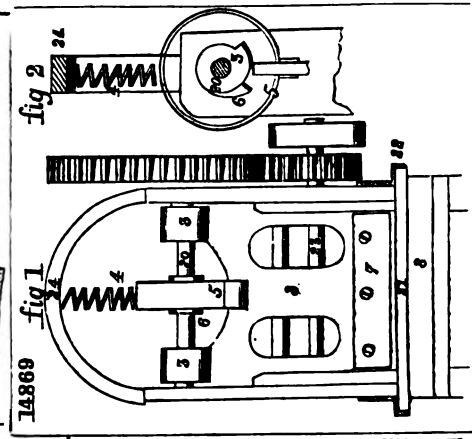

15081

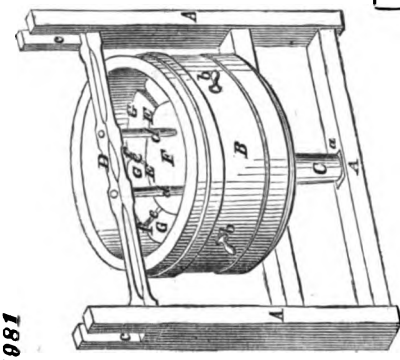

15033

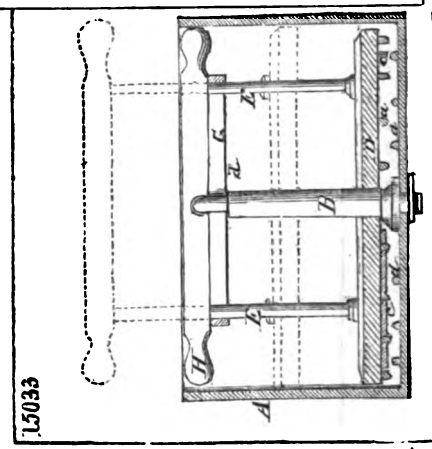

15353

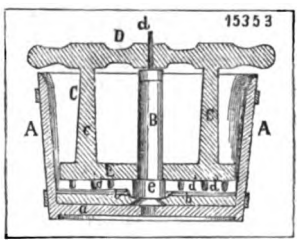

15503

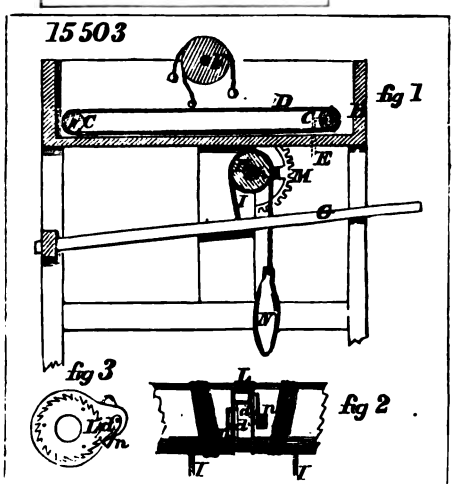

15054

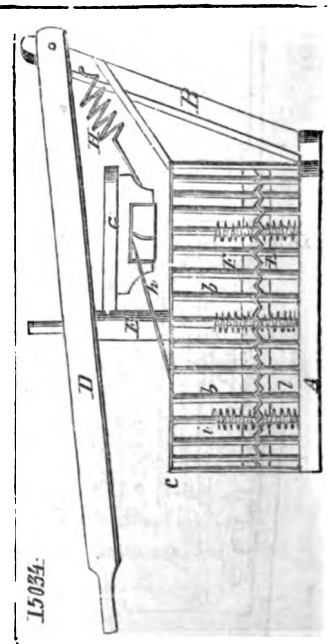

Digitized by Google

14818

fig. 2

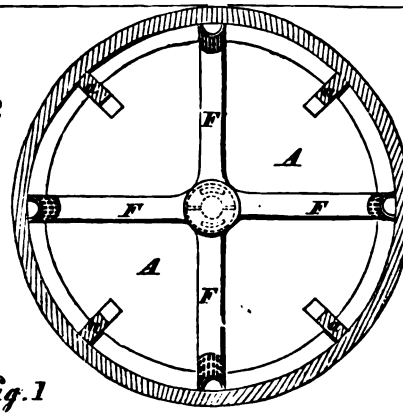

fig. 1

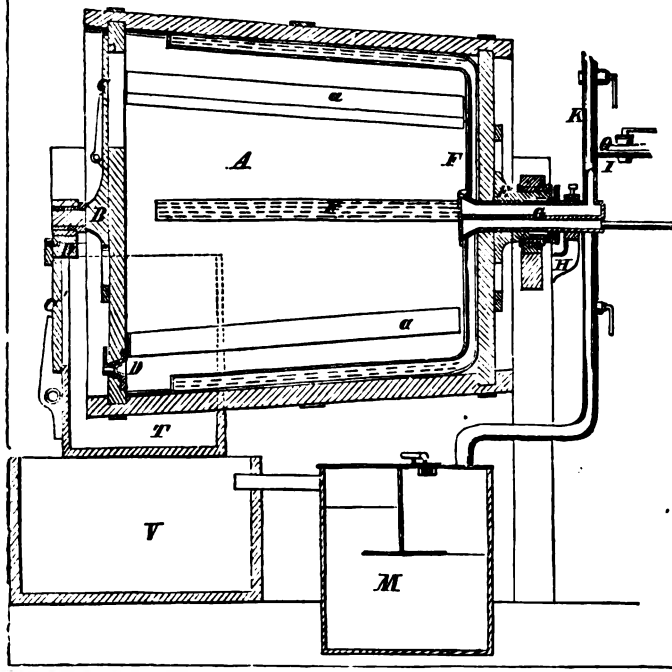

15895

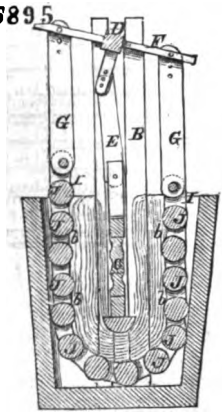

15711

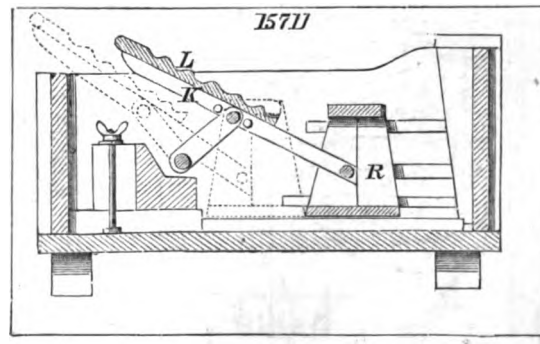

Digitized by Google

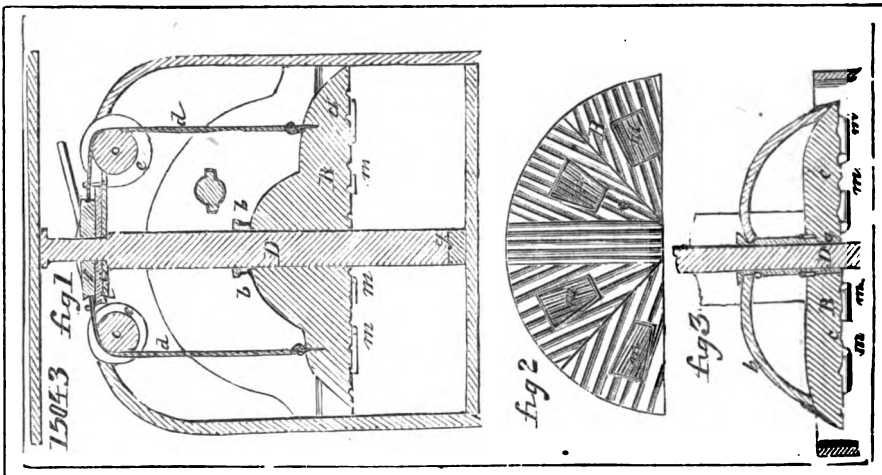

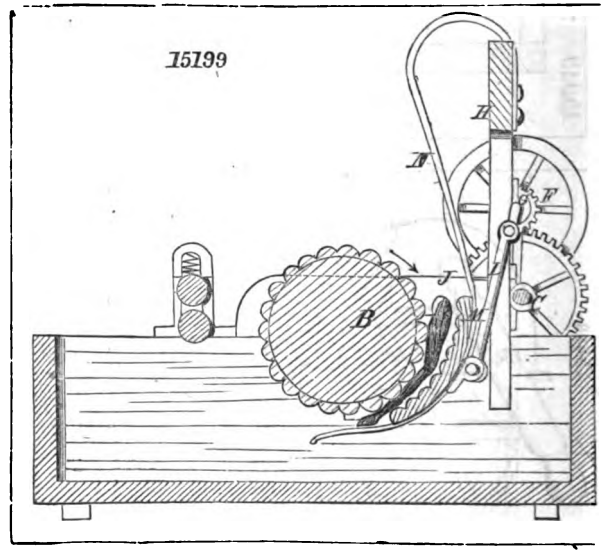

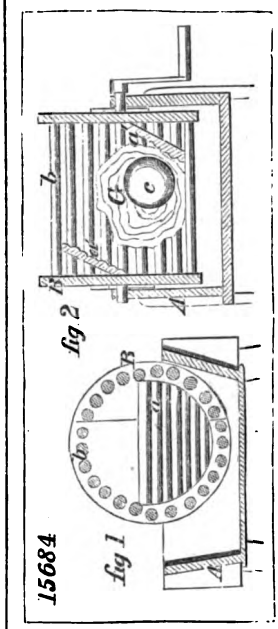

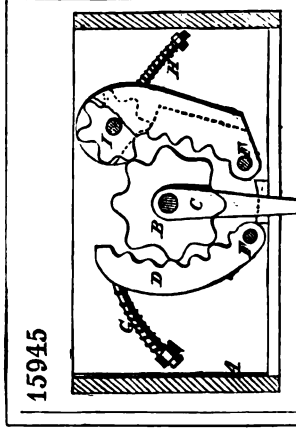

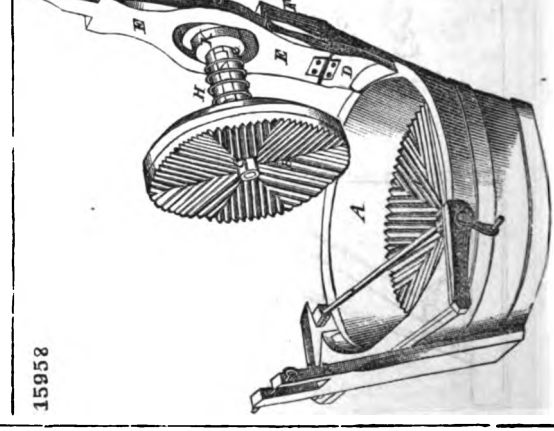

Digitized by Google

15949

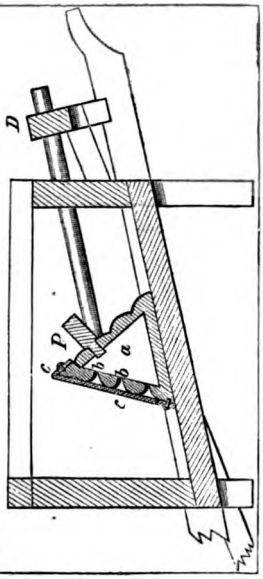

15989

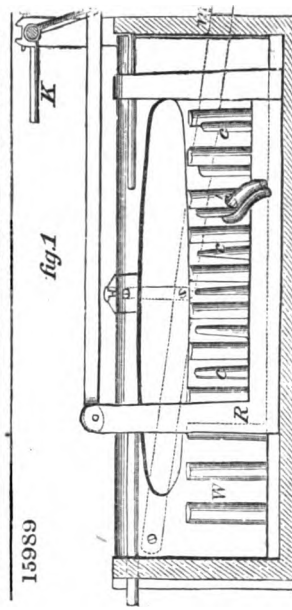

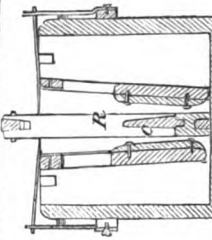

15580

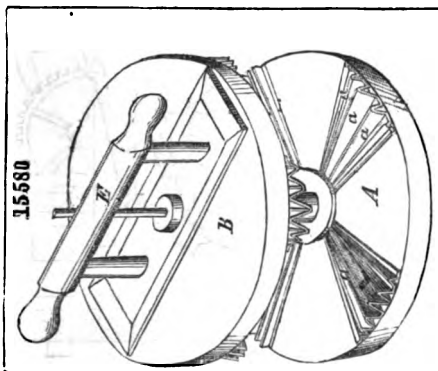

16190

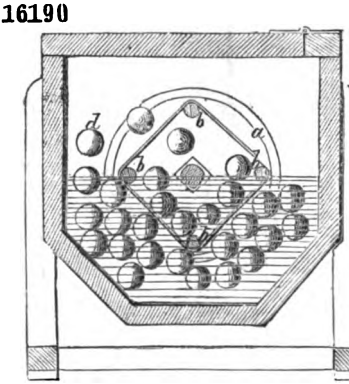

16068

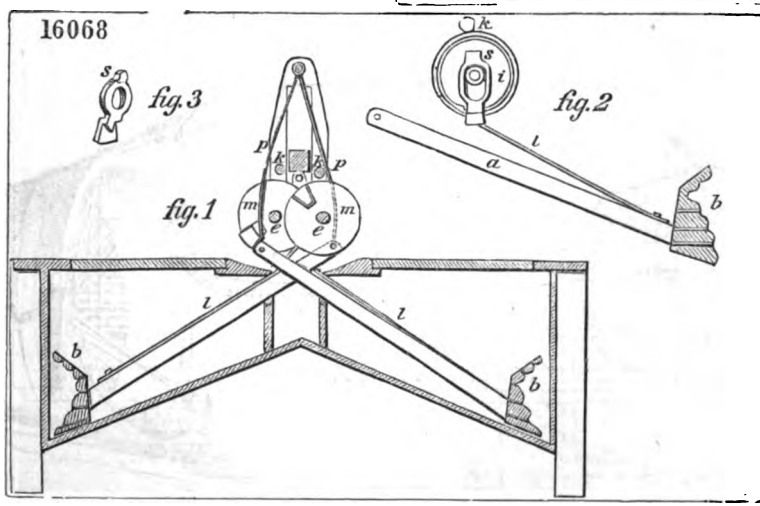

Digitized by Google

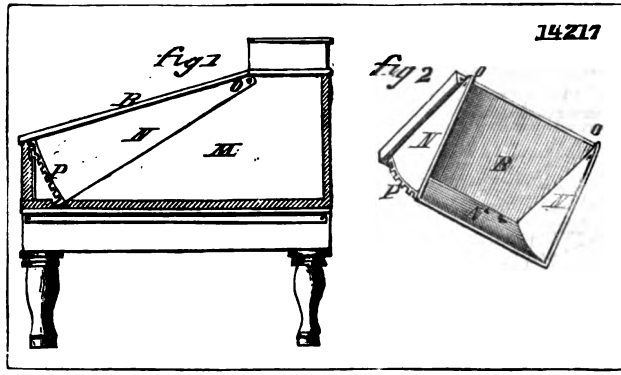

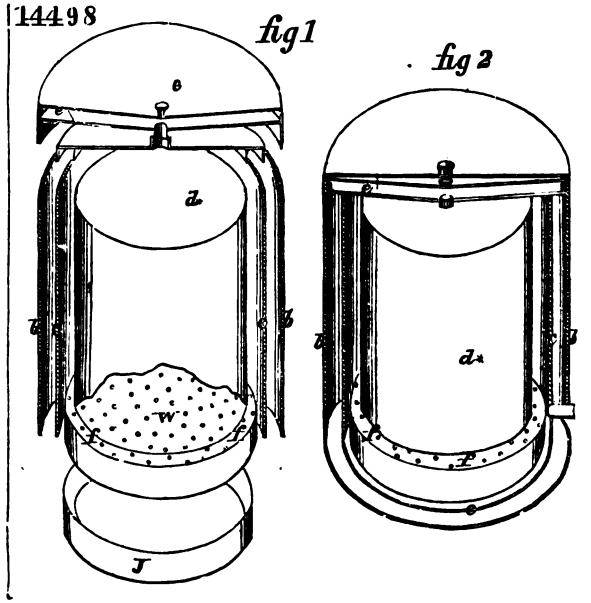

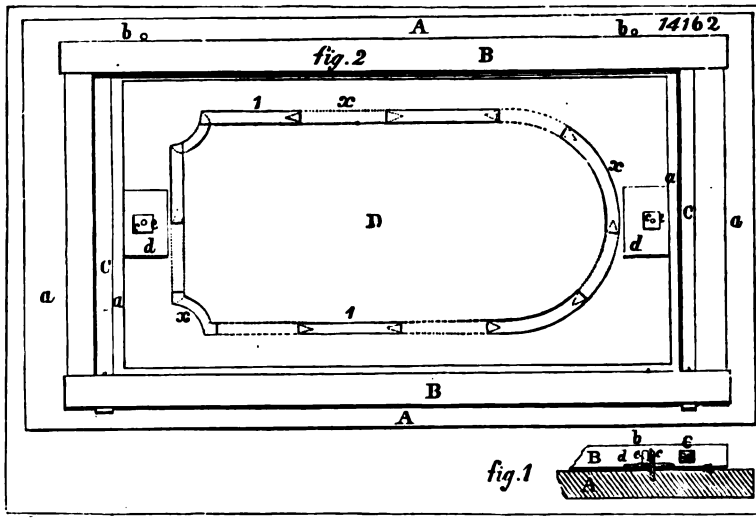

Digitized by Google

15511

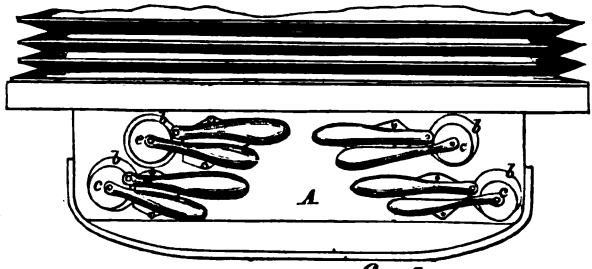

fig. 1

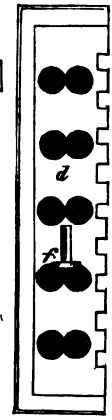

fig. 2

fig. 3

14122

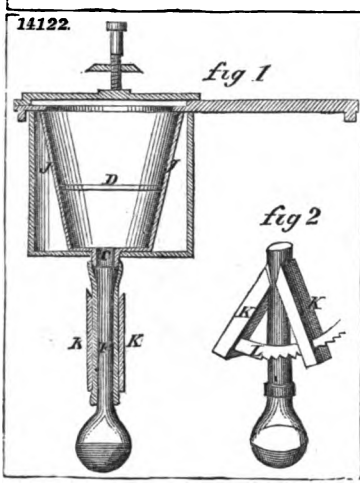

fig 1

fig 2

15401

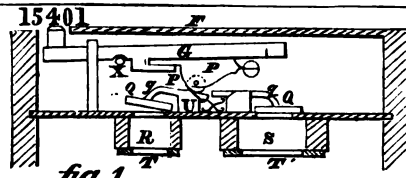

fig. 1

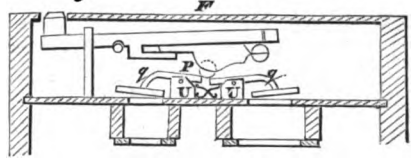

fig. 2

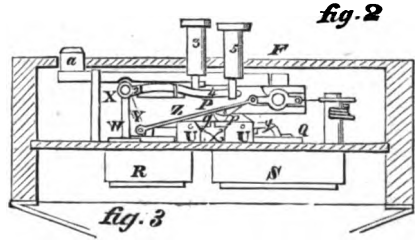

fig. 3

15212

fig 1

fig 2

14202

fig. 2

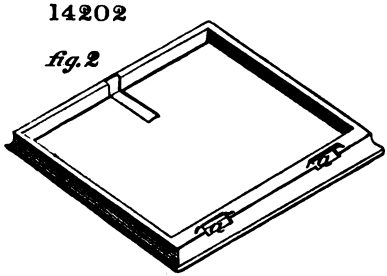

fig. 1

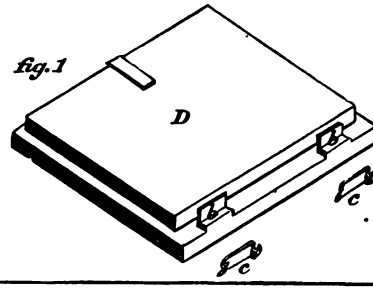

Digitized by Google

15282.

fig. 2.

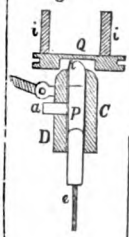

fig 1.

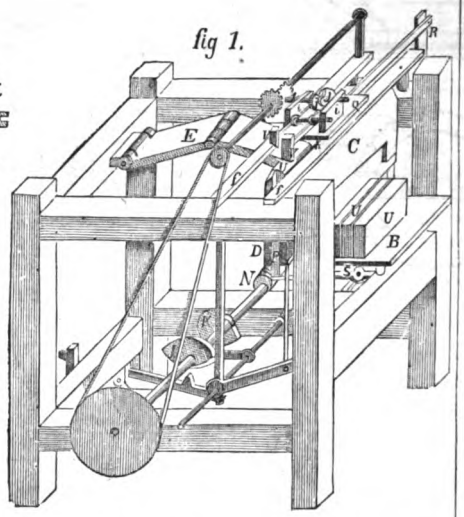

16207

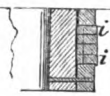

fig.1

fig.2

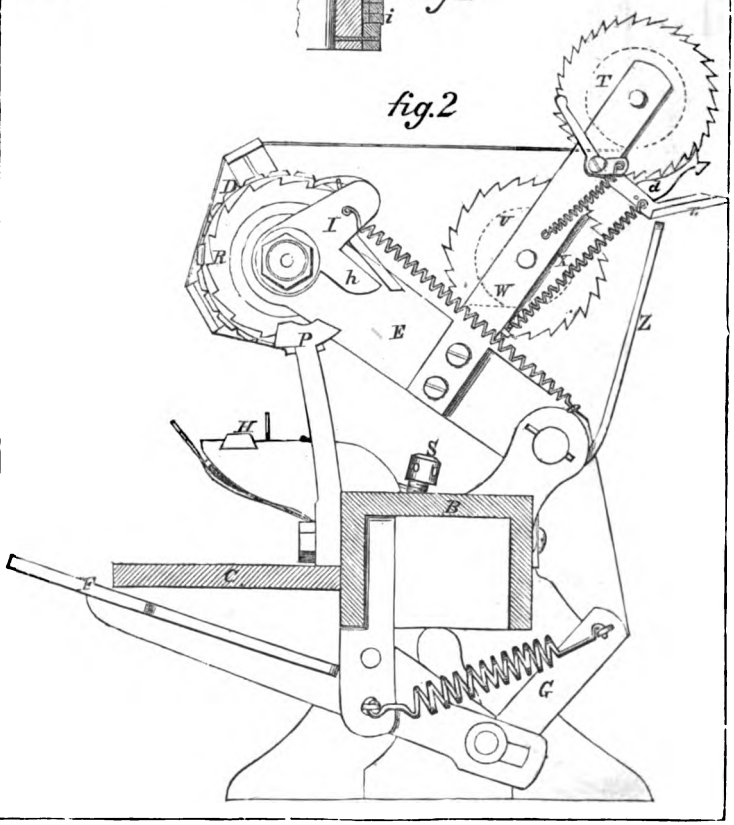

Digitized by Google

15969

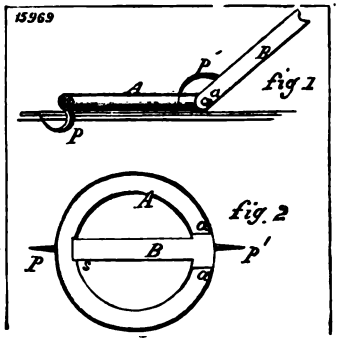

14451

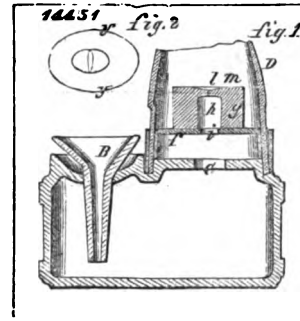

14306

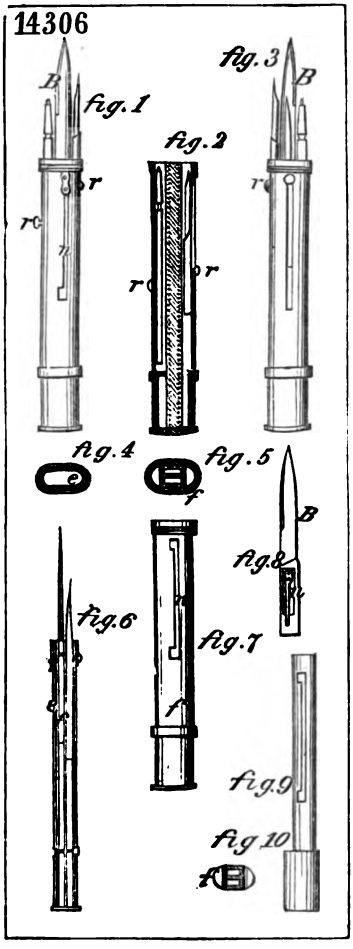

16141

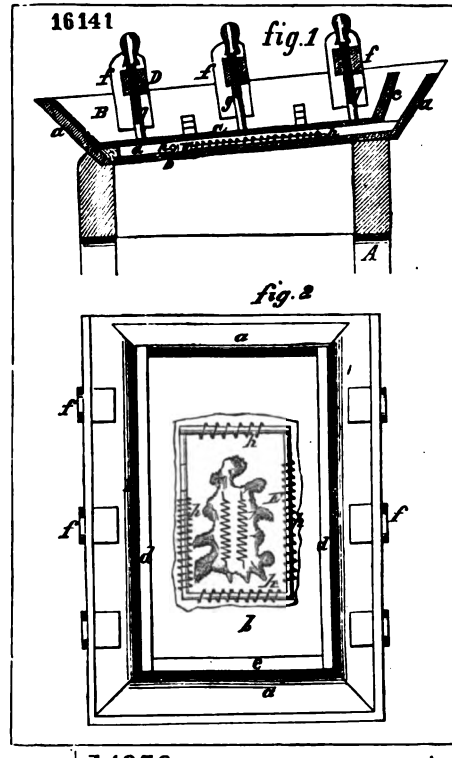

14378

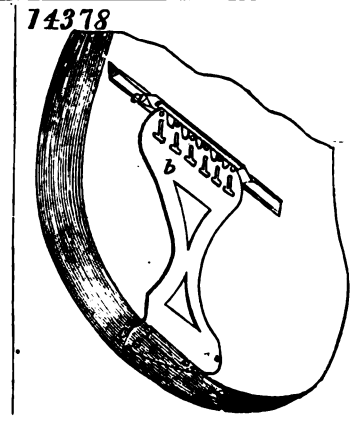

15527

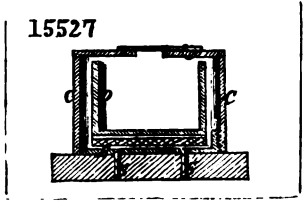

Digitized by Google

14643

fig 3

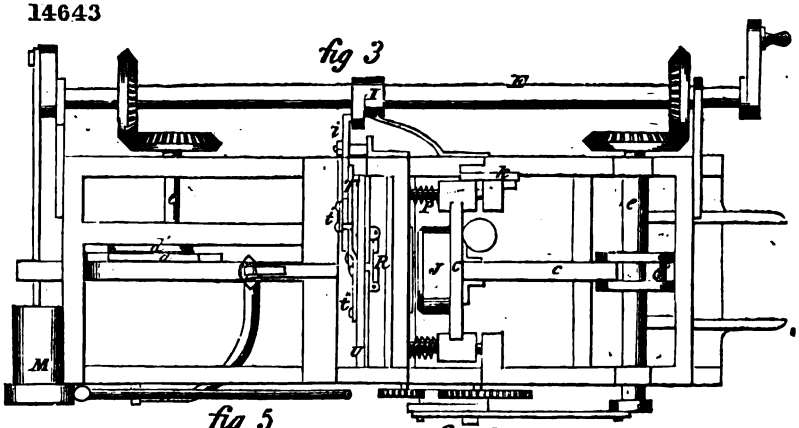

fig 5

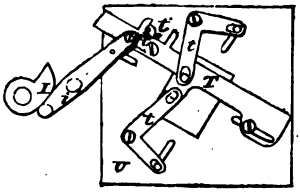

fig 4

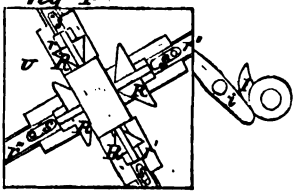

fig 2

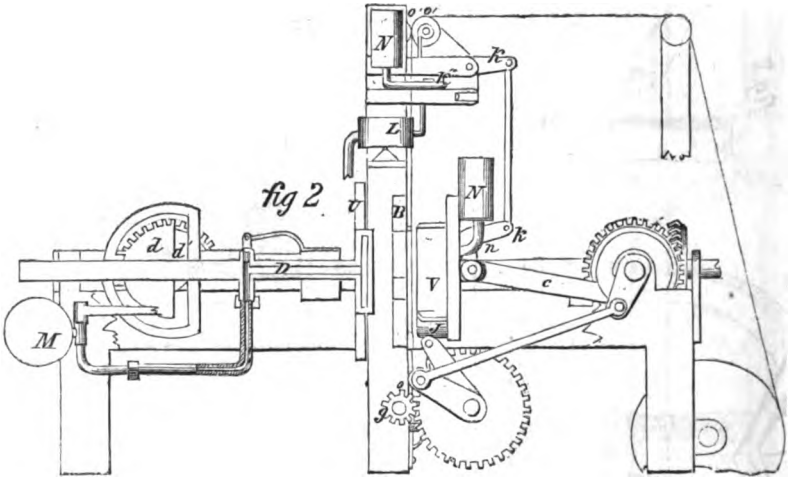

fig 1

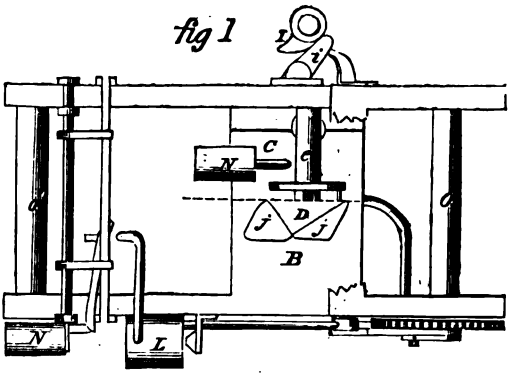

Digitized by Google

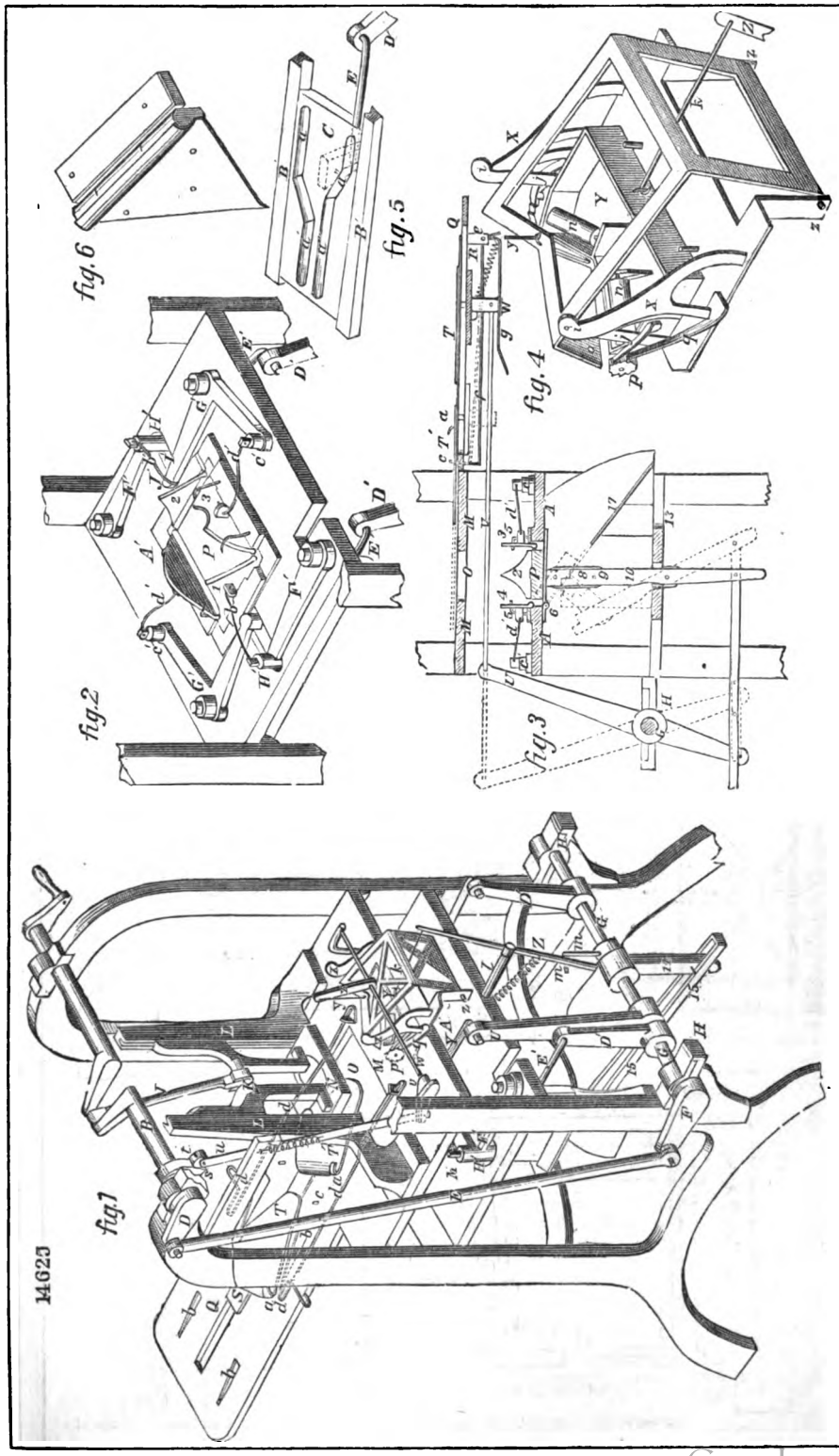

Digitized by Google

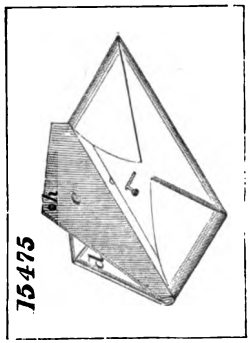
15475

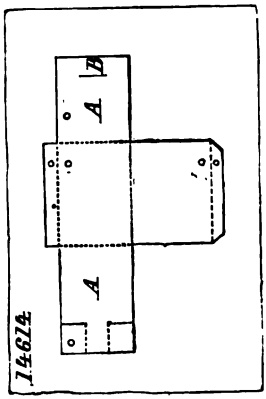
14614
A
B
A

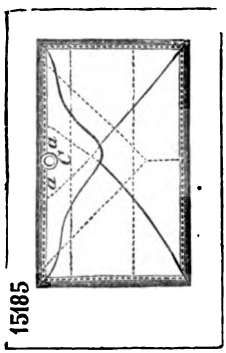
15185

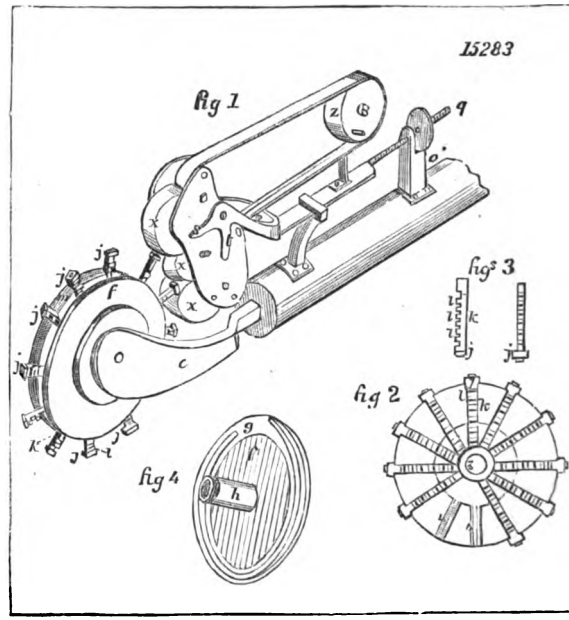
15283
fig 1
fig 3
fig 2
fig 4

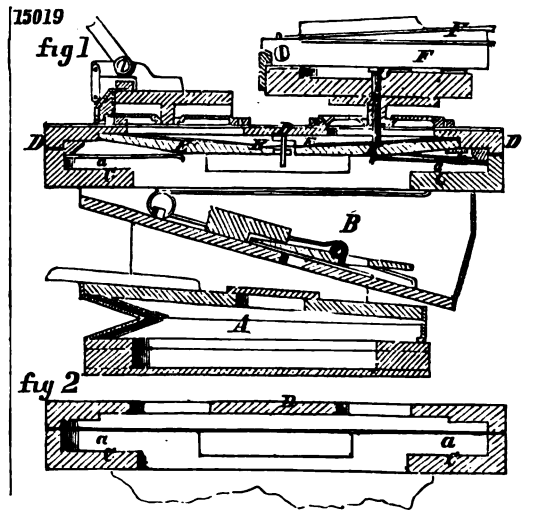
15019
fig 1
fig 2
A
B

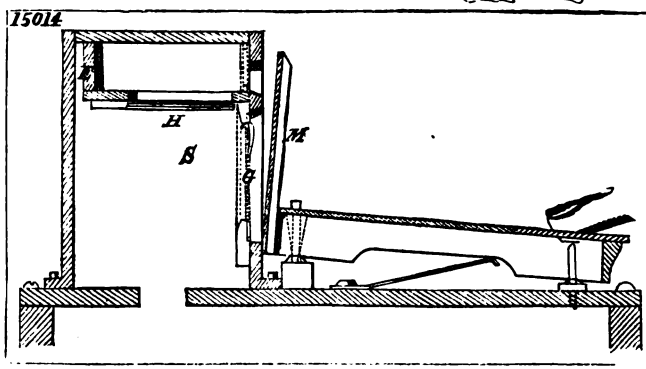
15014
H
M

16094

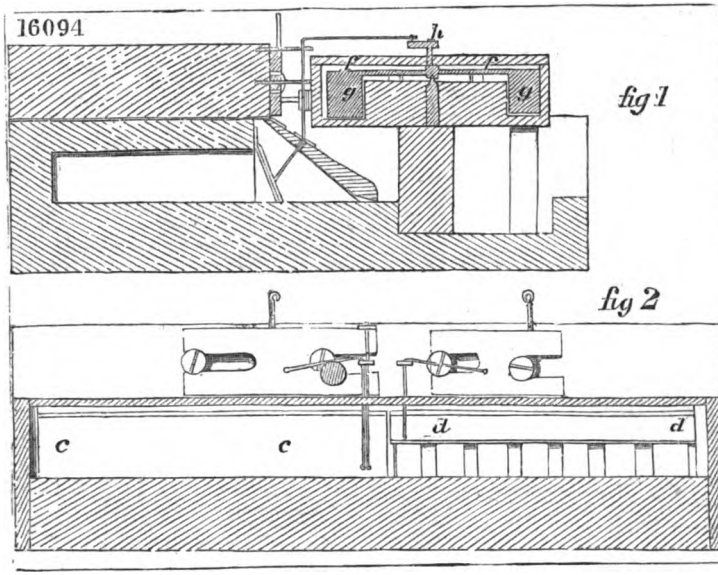

15218

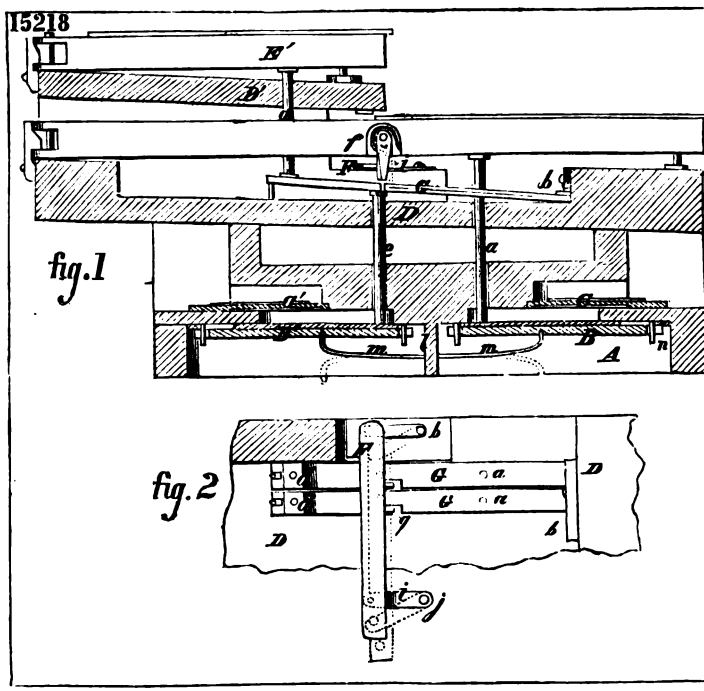

Digitized by Google

15475

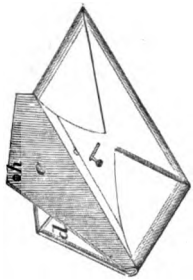

15283

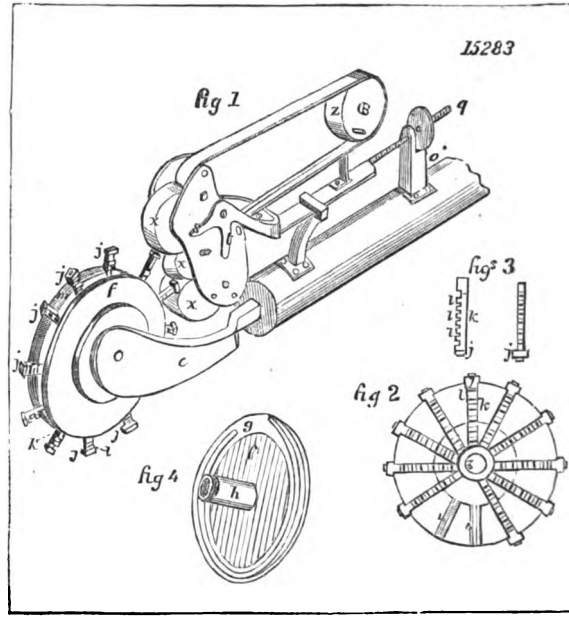

14614

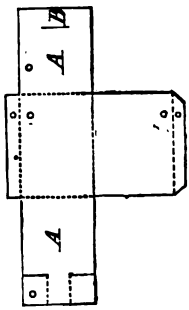

15019

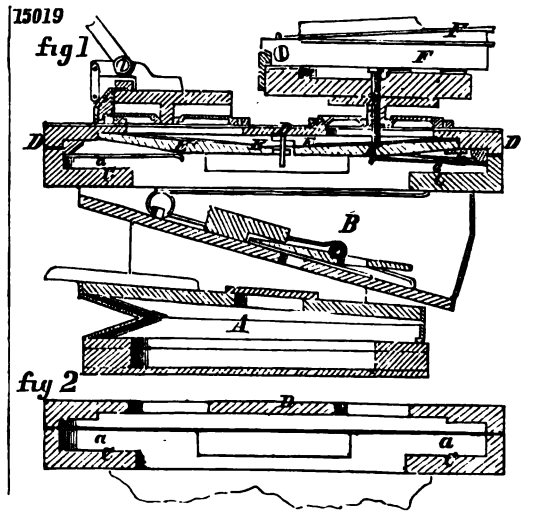

15185

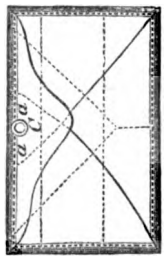

15014

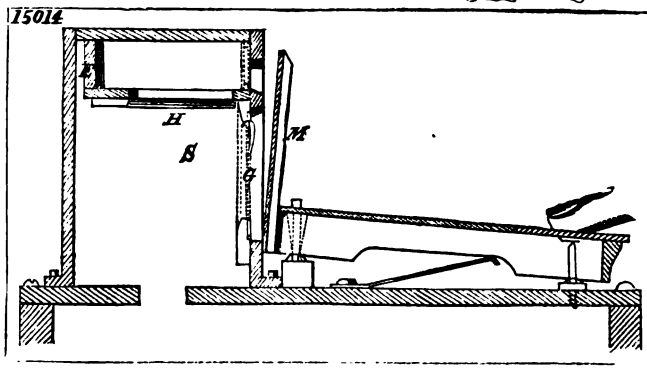

16094

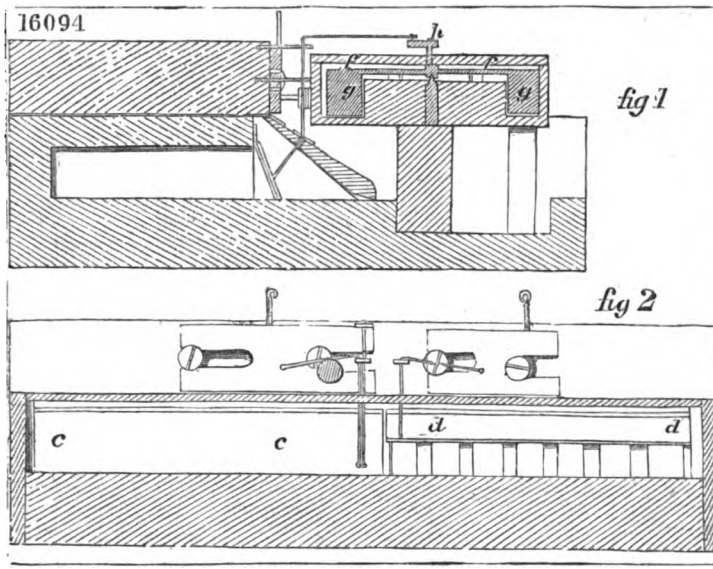

15218

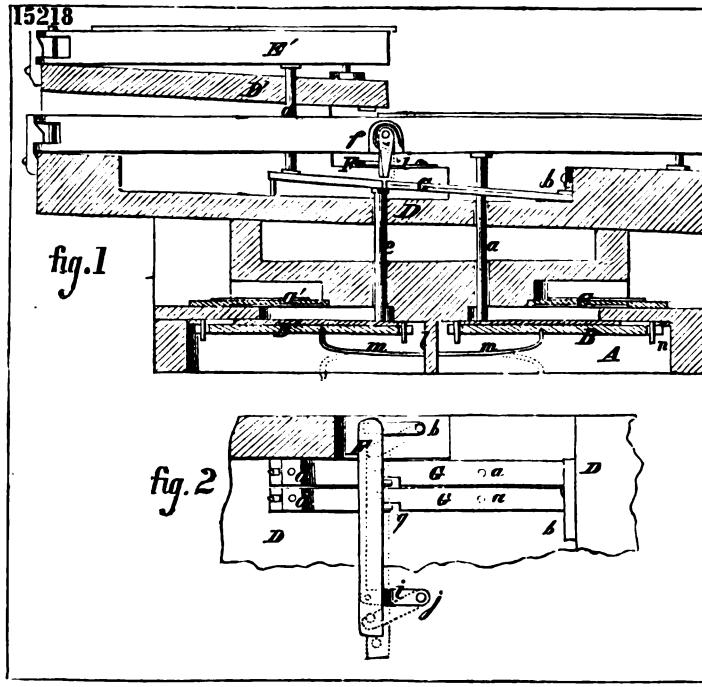

Digitized by Google

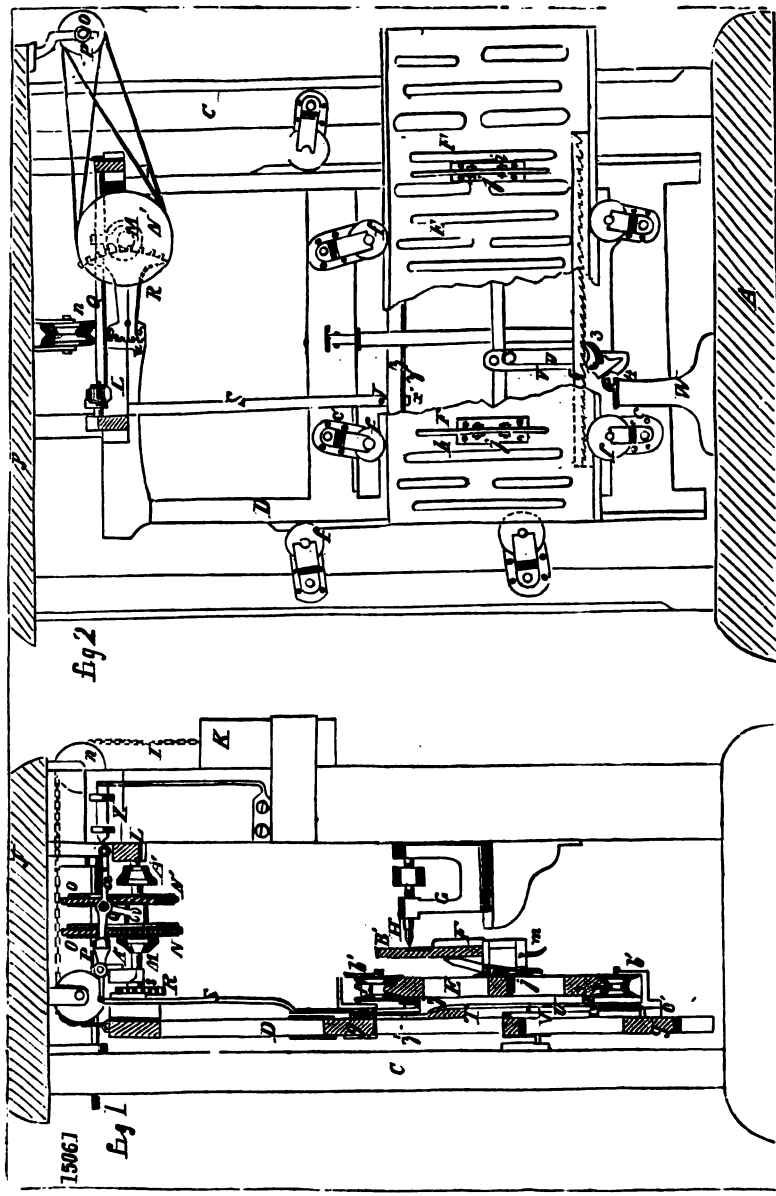

Digitized by Google

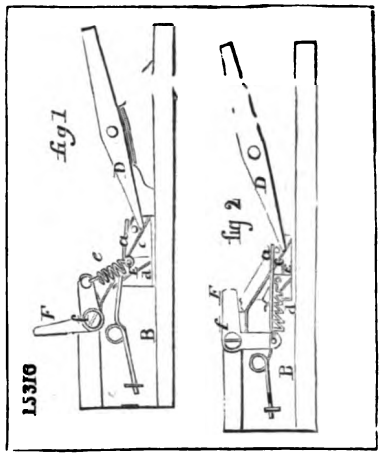

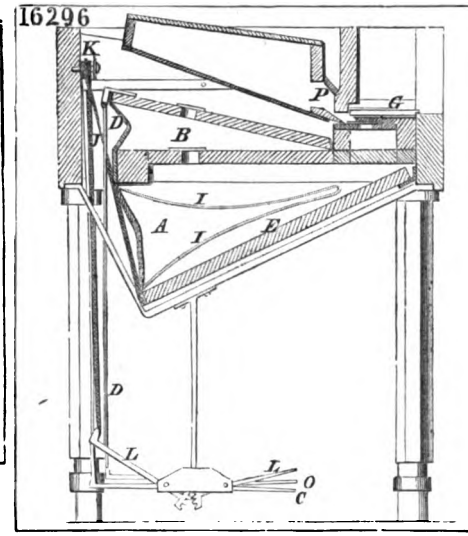

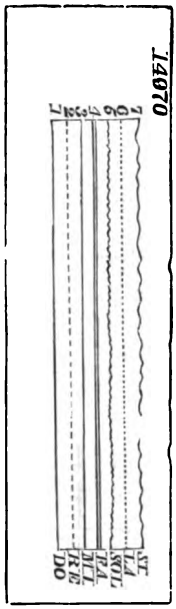

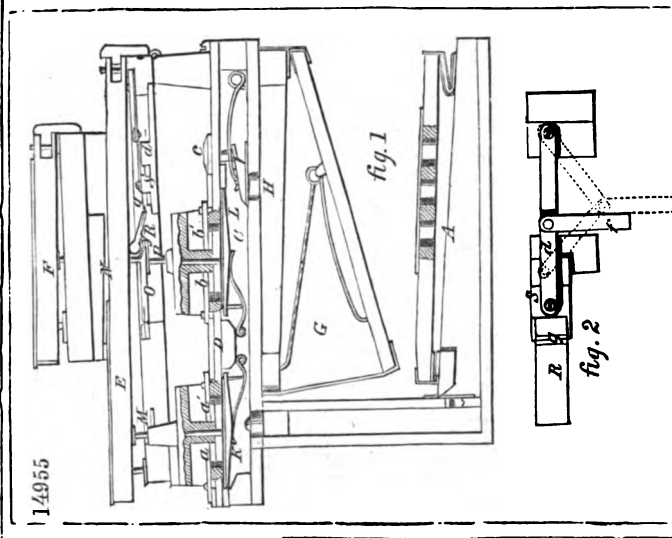

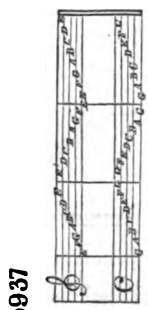

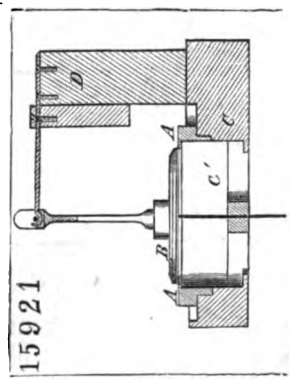

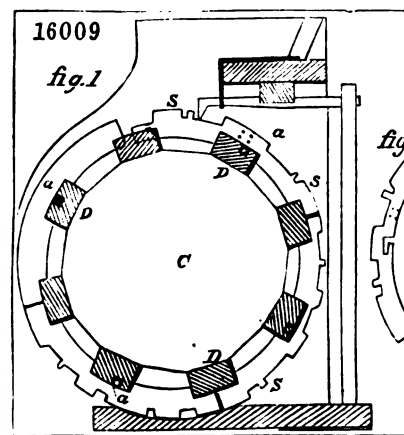

Digitized by Google

14992

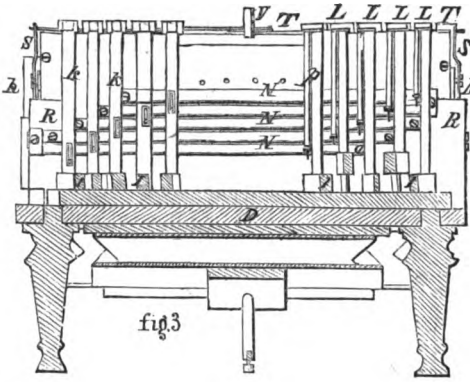

fig.3

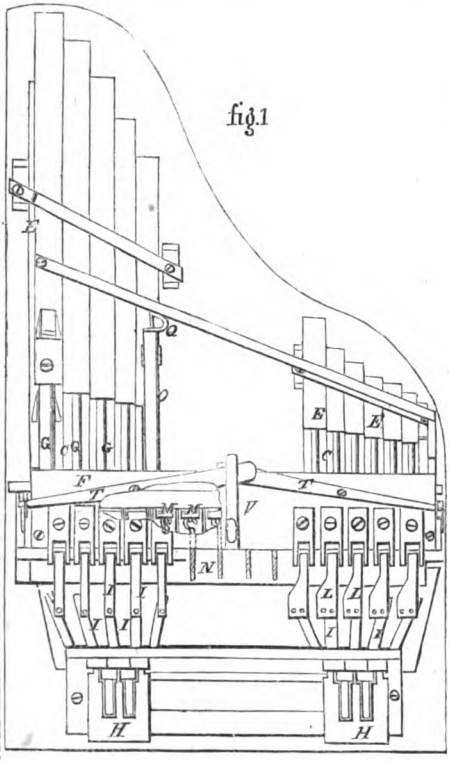

fig.1

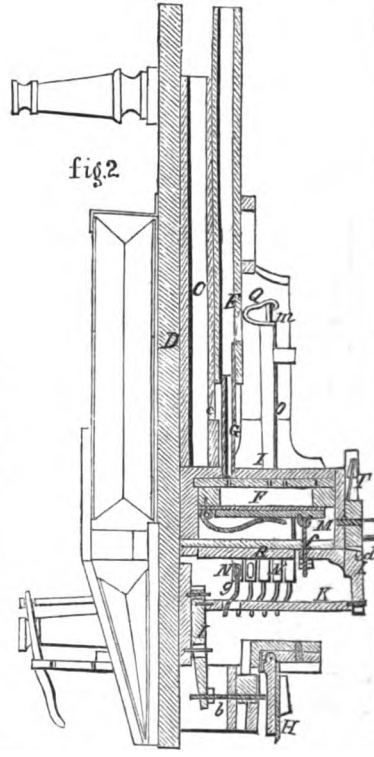

fig.2

15065

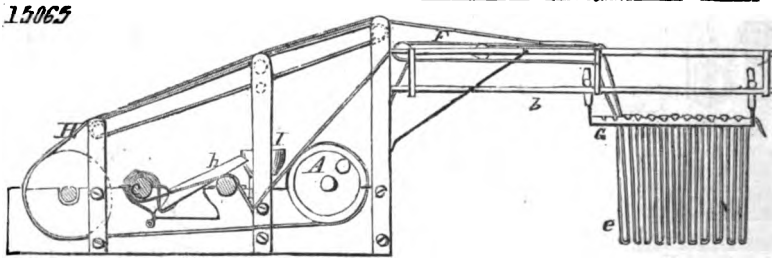

Digitized by Google

14935

fig. 1

fig. 2

15066

fig. 1

fig. 2

14501

fig. 2

fig. 1

Digitized by Google

14303

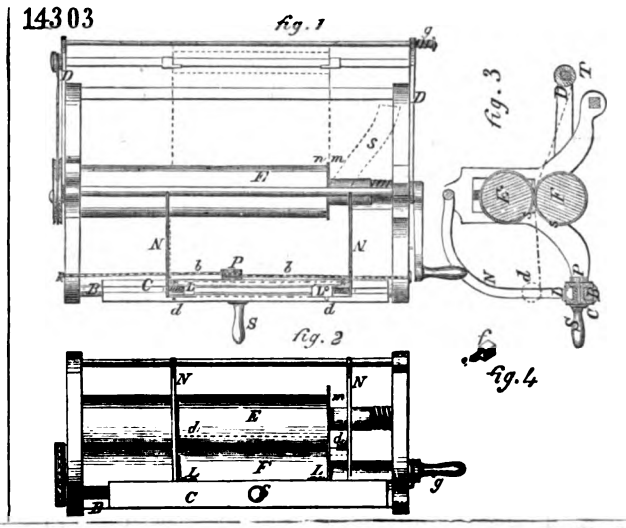

15232

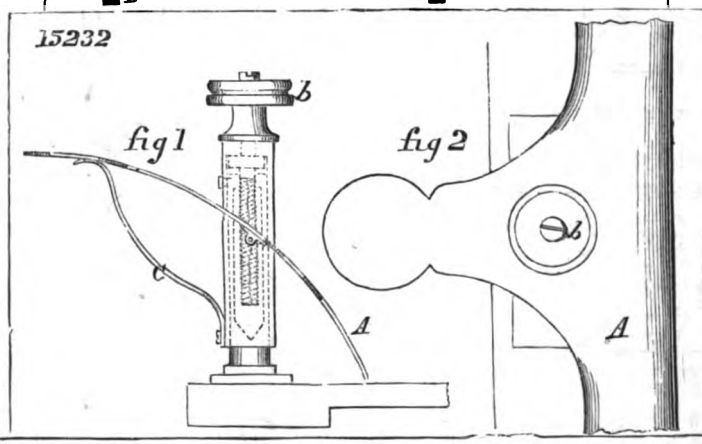

15228

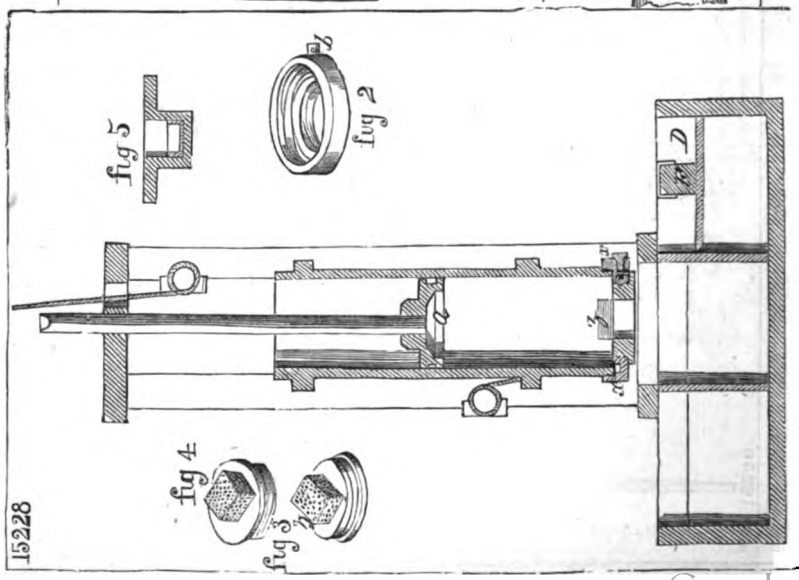

Digitized by Google

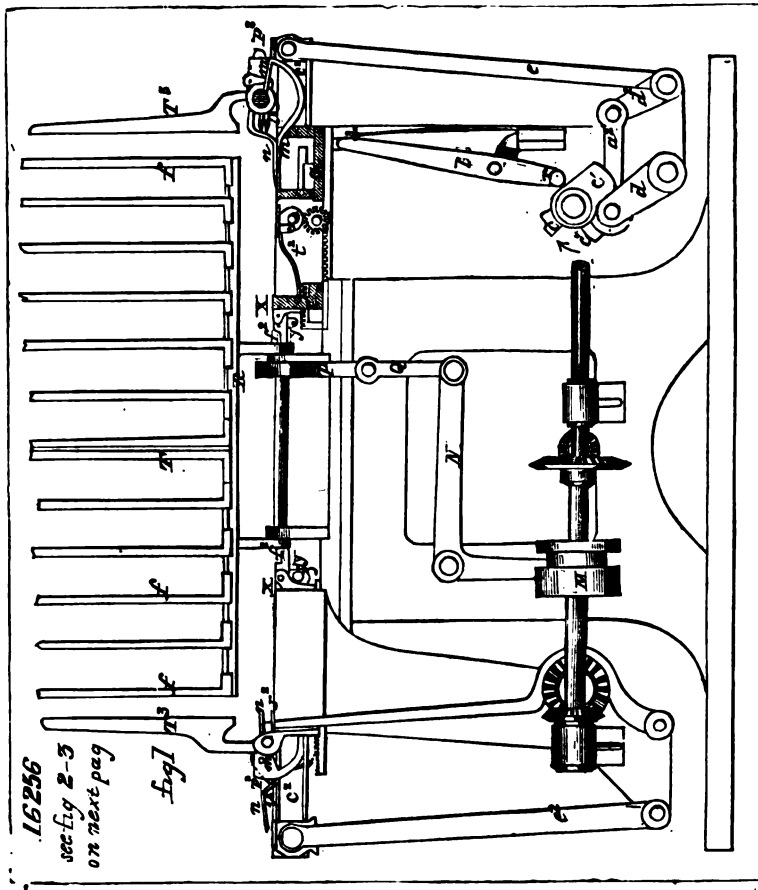

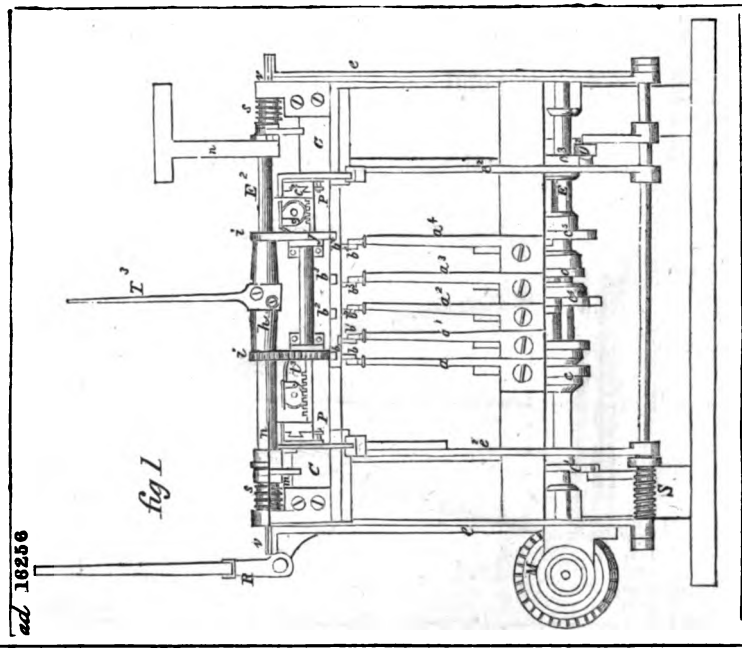

Digitized by Google

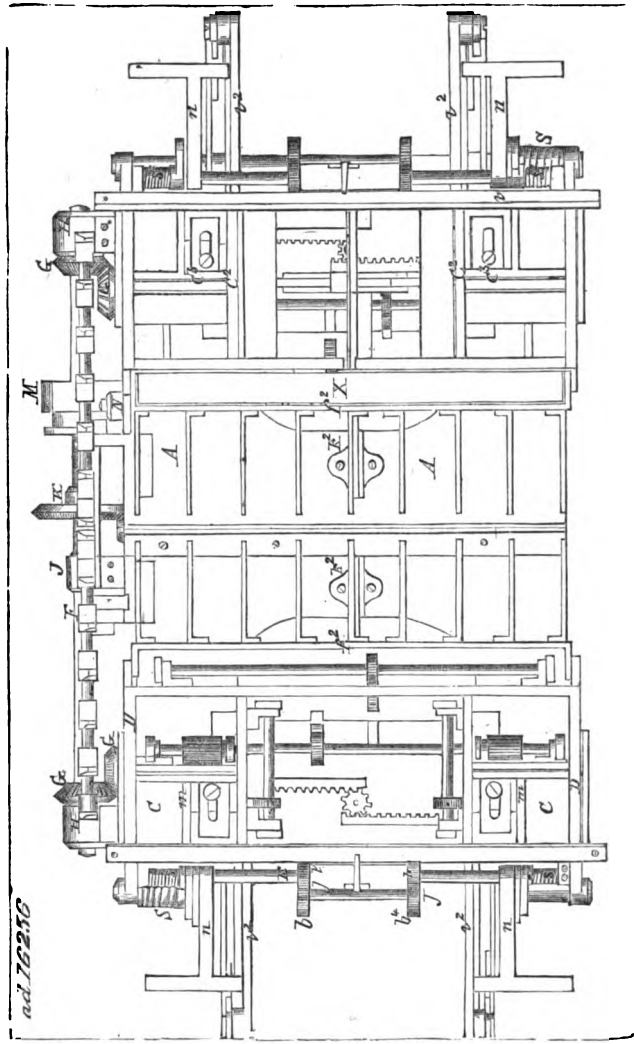

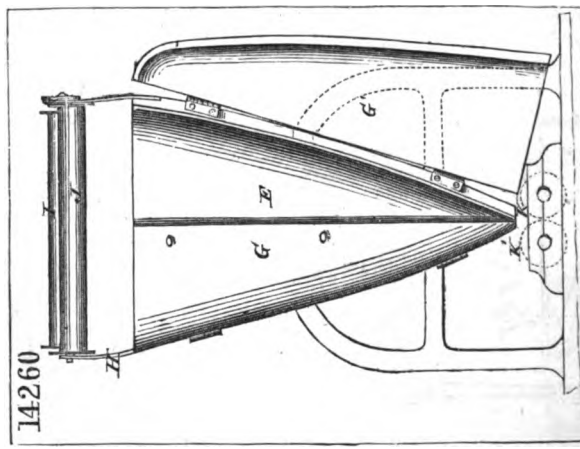

Digitized by Google

14697

fig 1

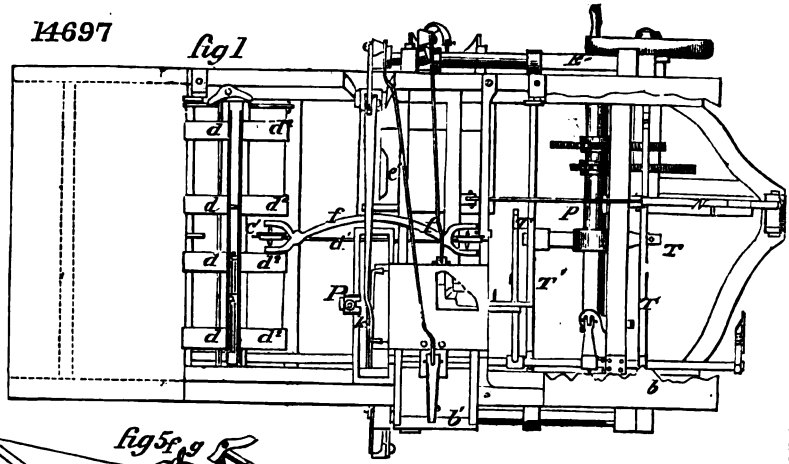

fig 5

fig 2

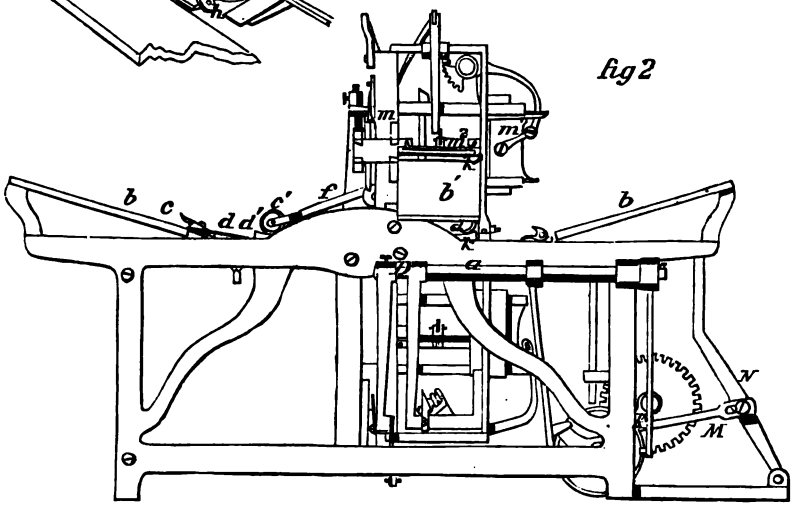

fig 4

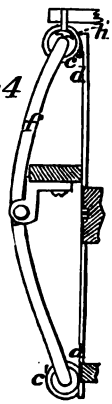

fig 3

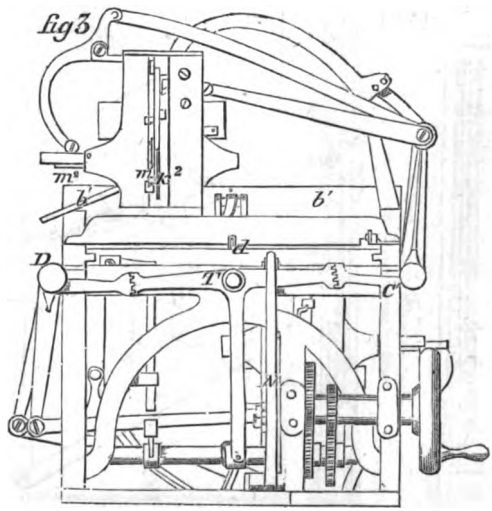

Digitized by Google

15657

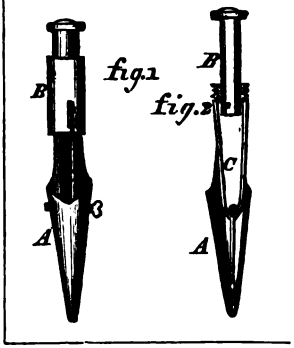

15622

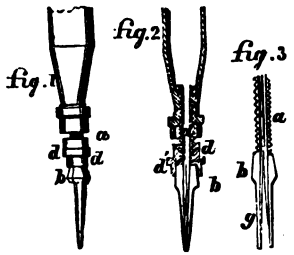

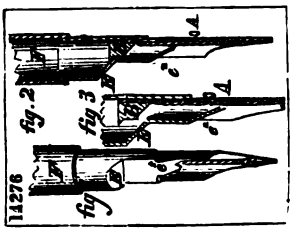

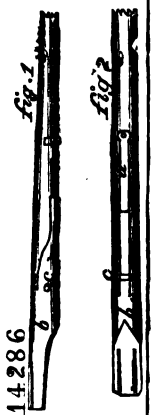

16299

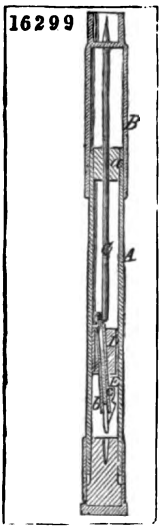

16266

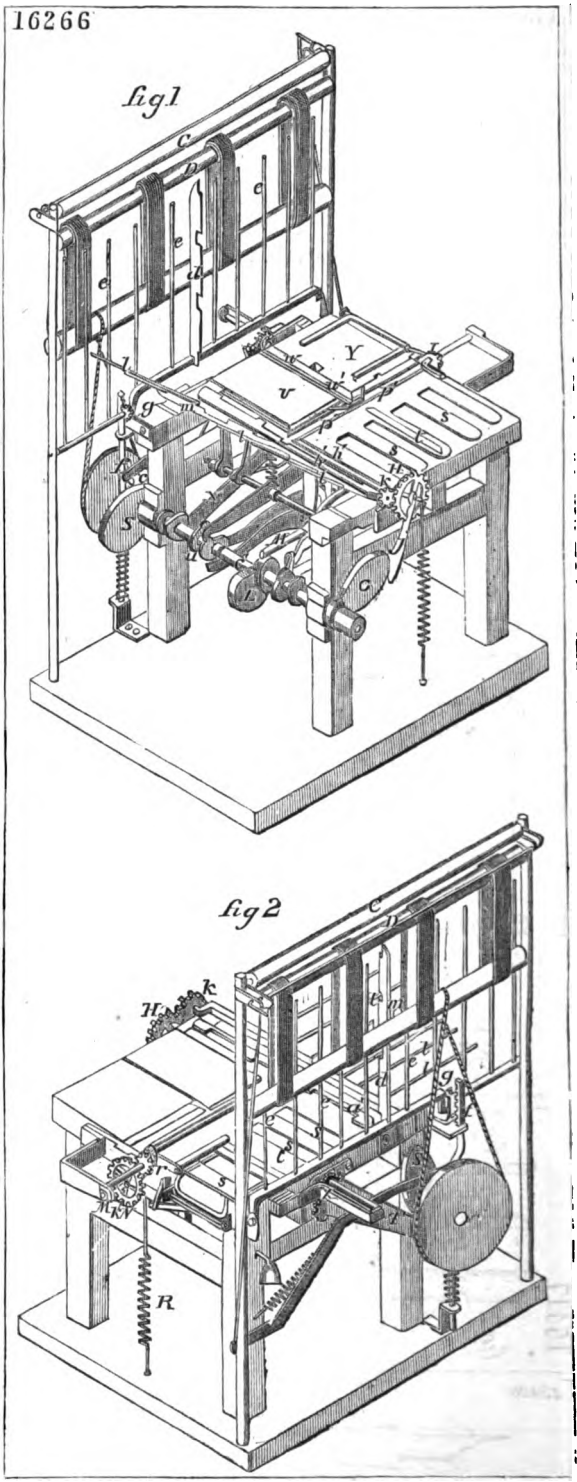

Digitized by Google

15842

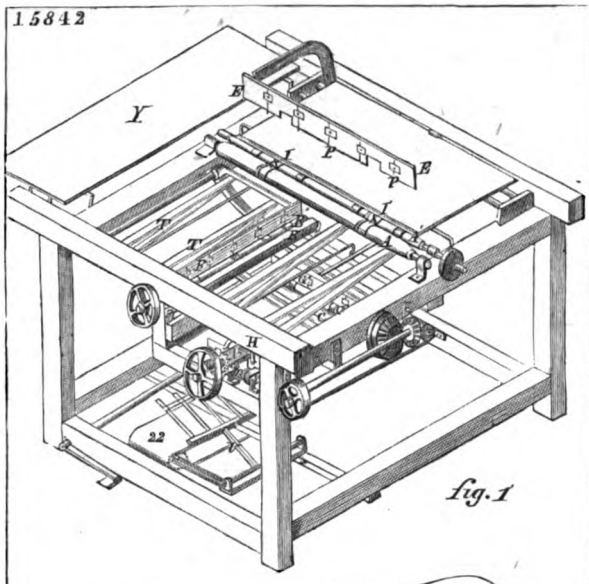

fig. 1

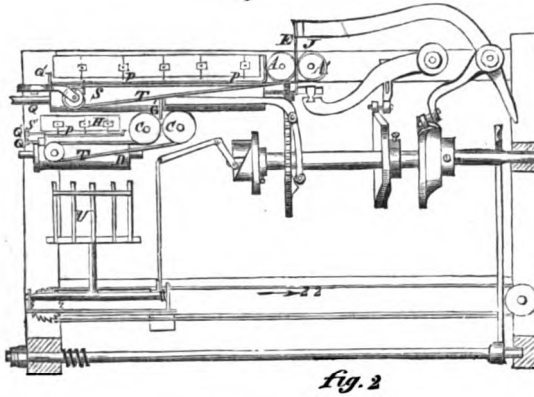

fig. 2

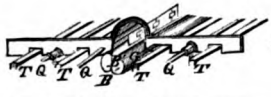

fig. 3

15660

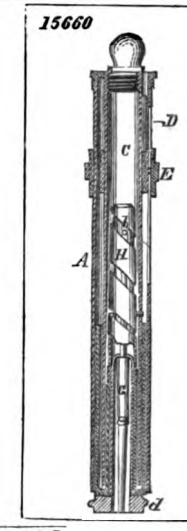

14425

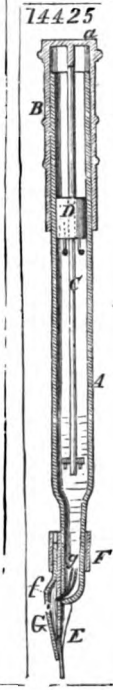

14760

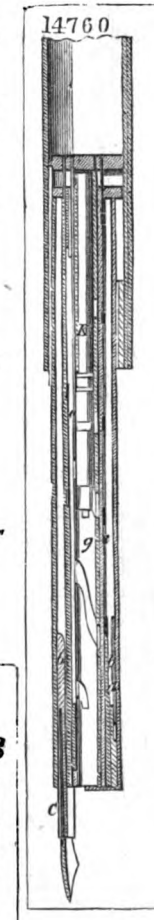

15417

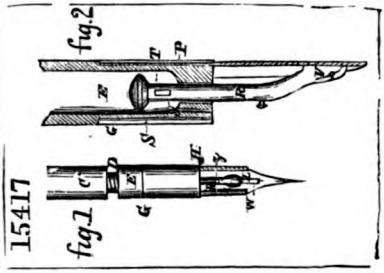

fig. 2

fig. 1

15490

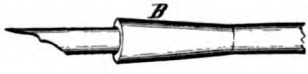

15223

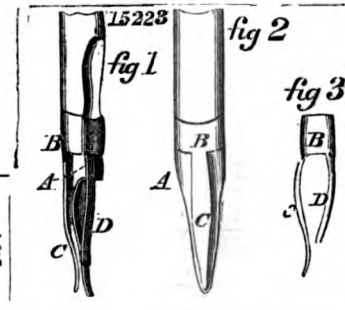

fig 1

fig 2

fig 3

Digitized by Google

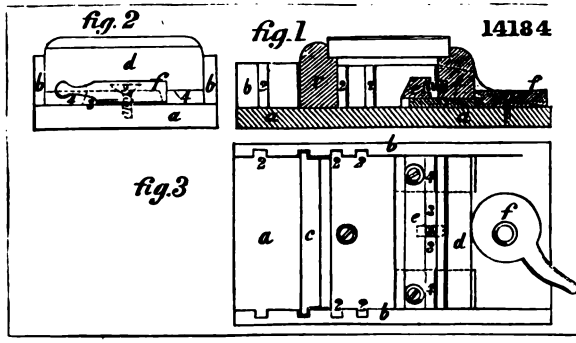

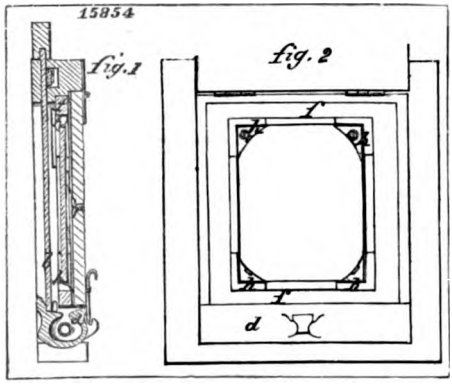

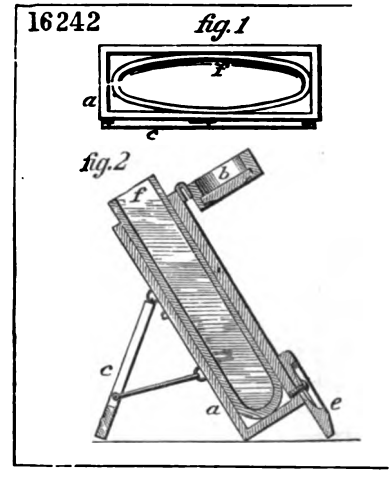

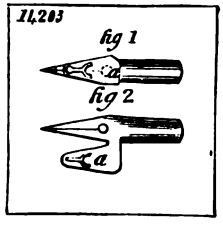

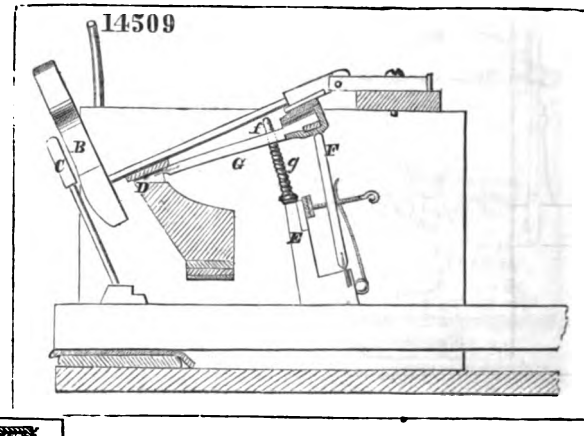

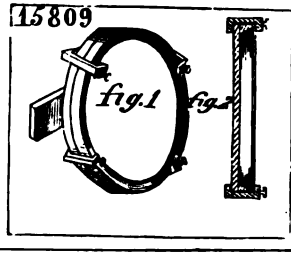

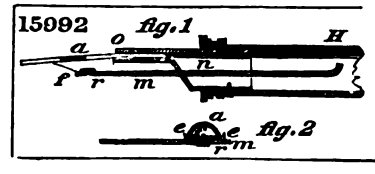

Digitized by Google

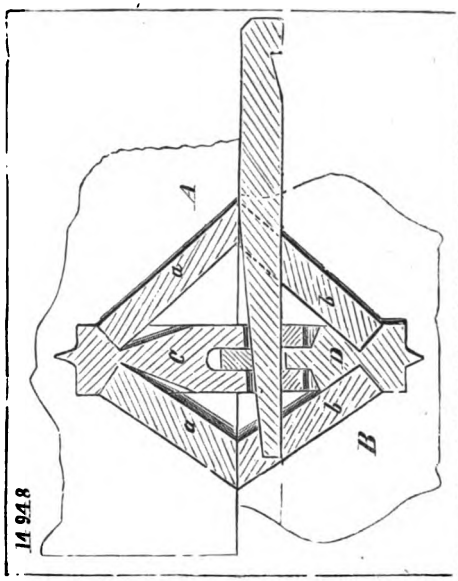

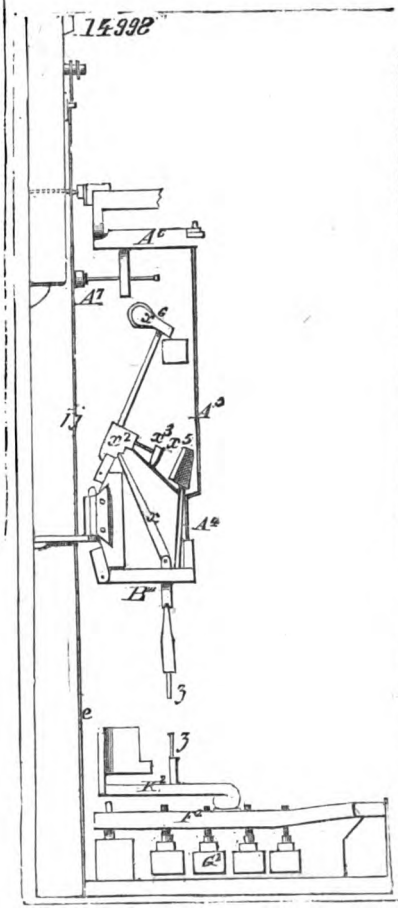

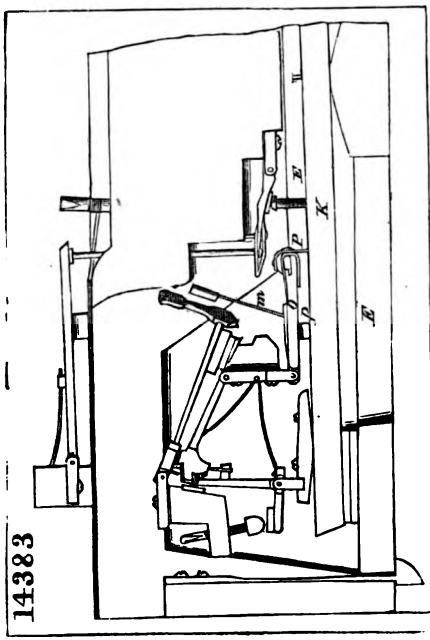

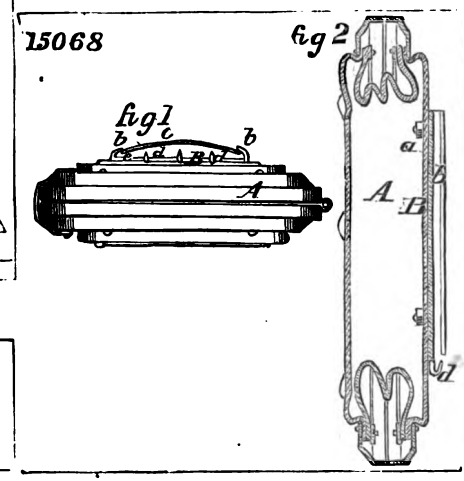

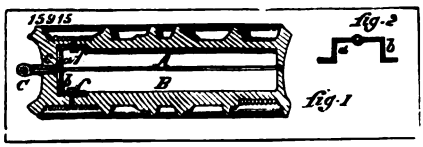

Digitized by Google

14992

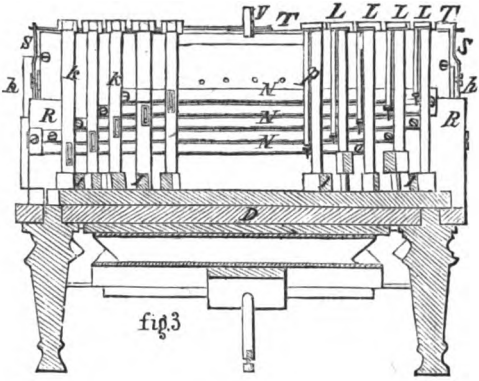

fig.3

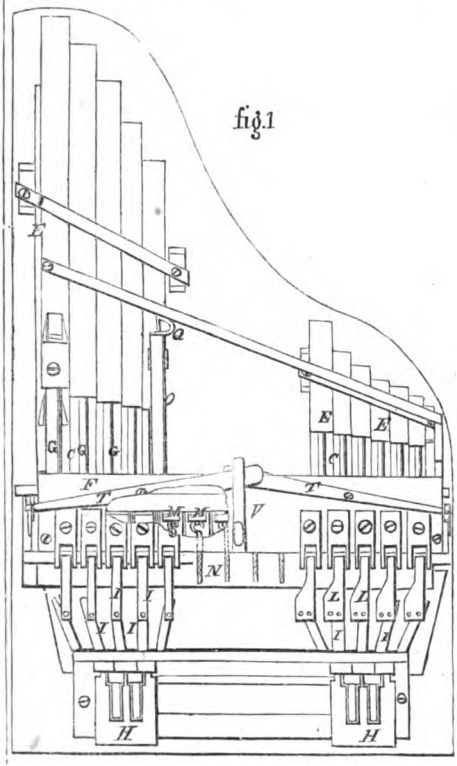

fig.1

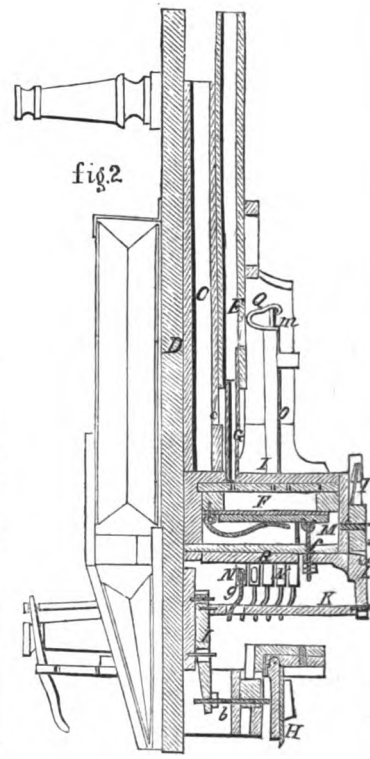

fig.2

15065

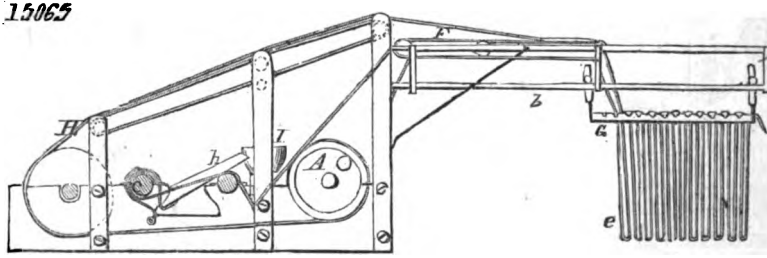

Digitized by Google

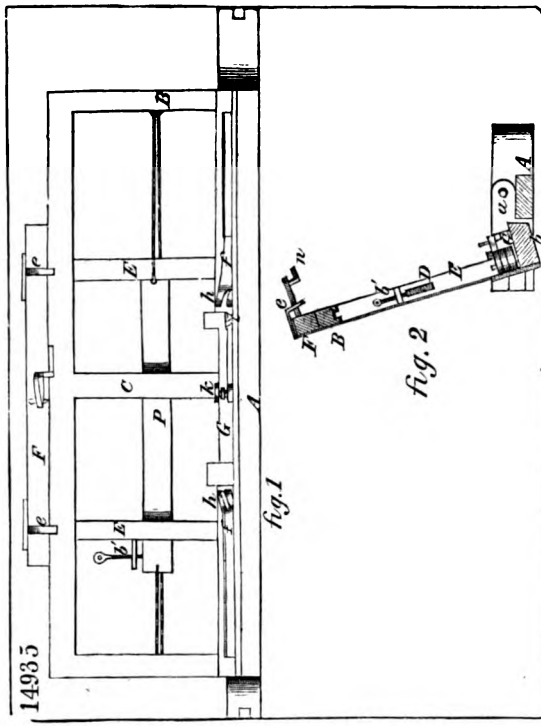

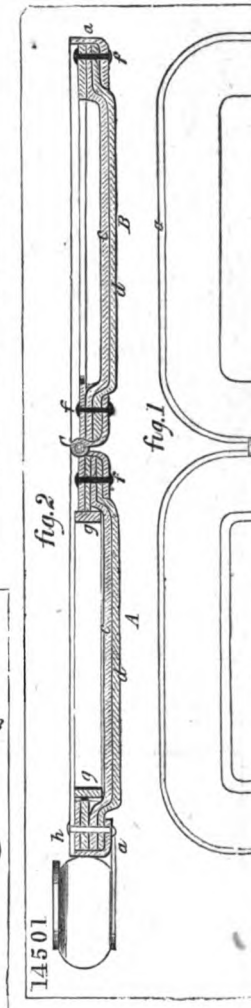

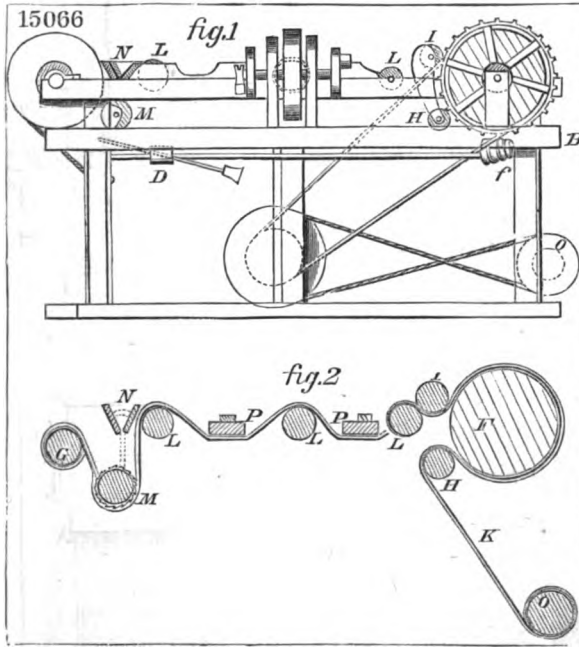

Digitized by Google

14303

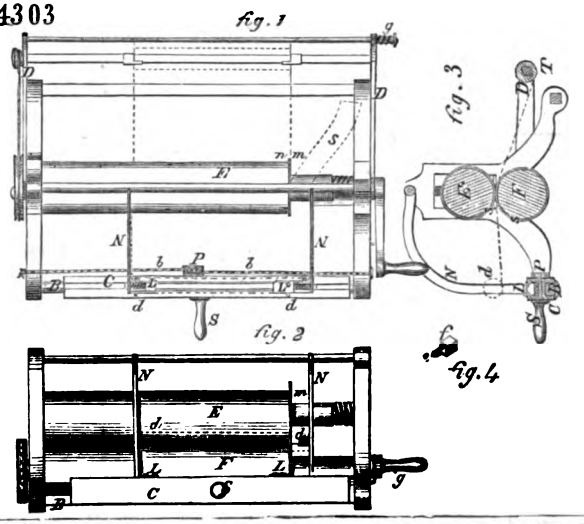

15232

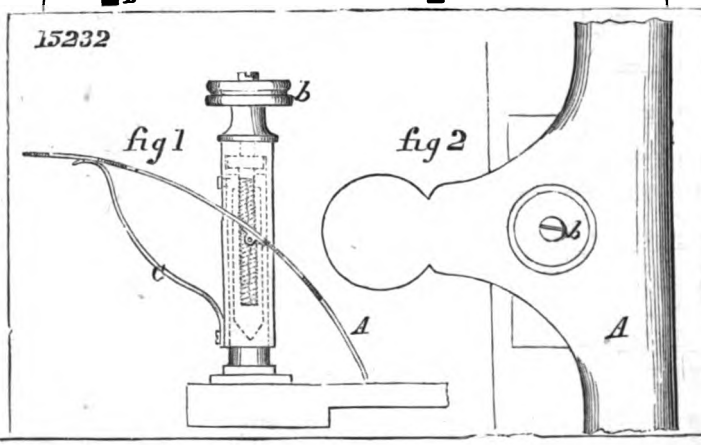

15228

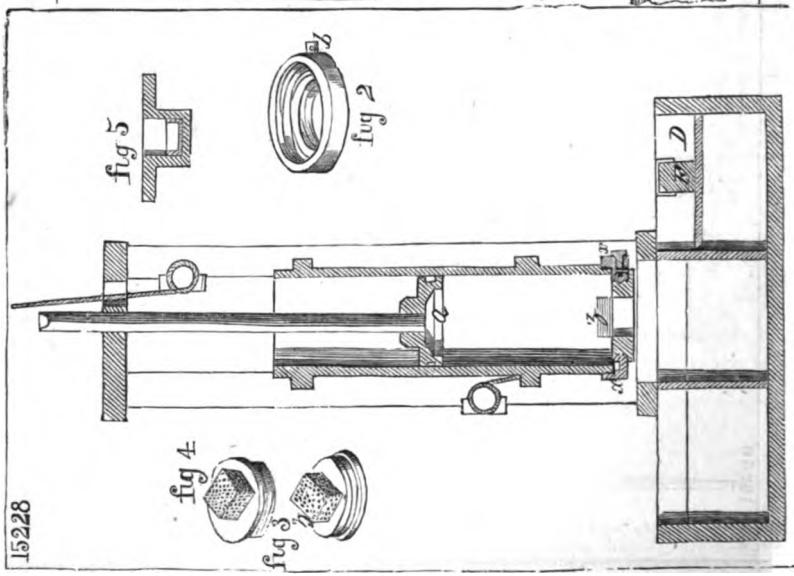

Digitized by Google

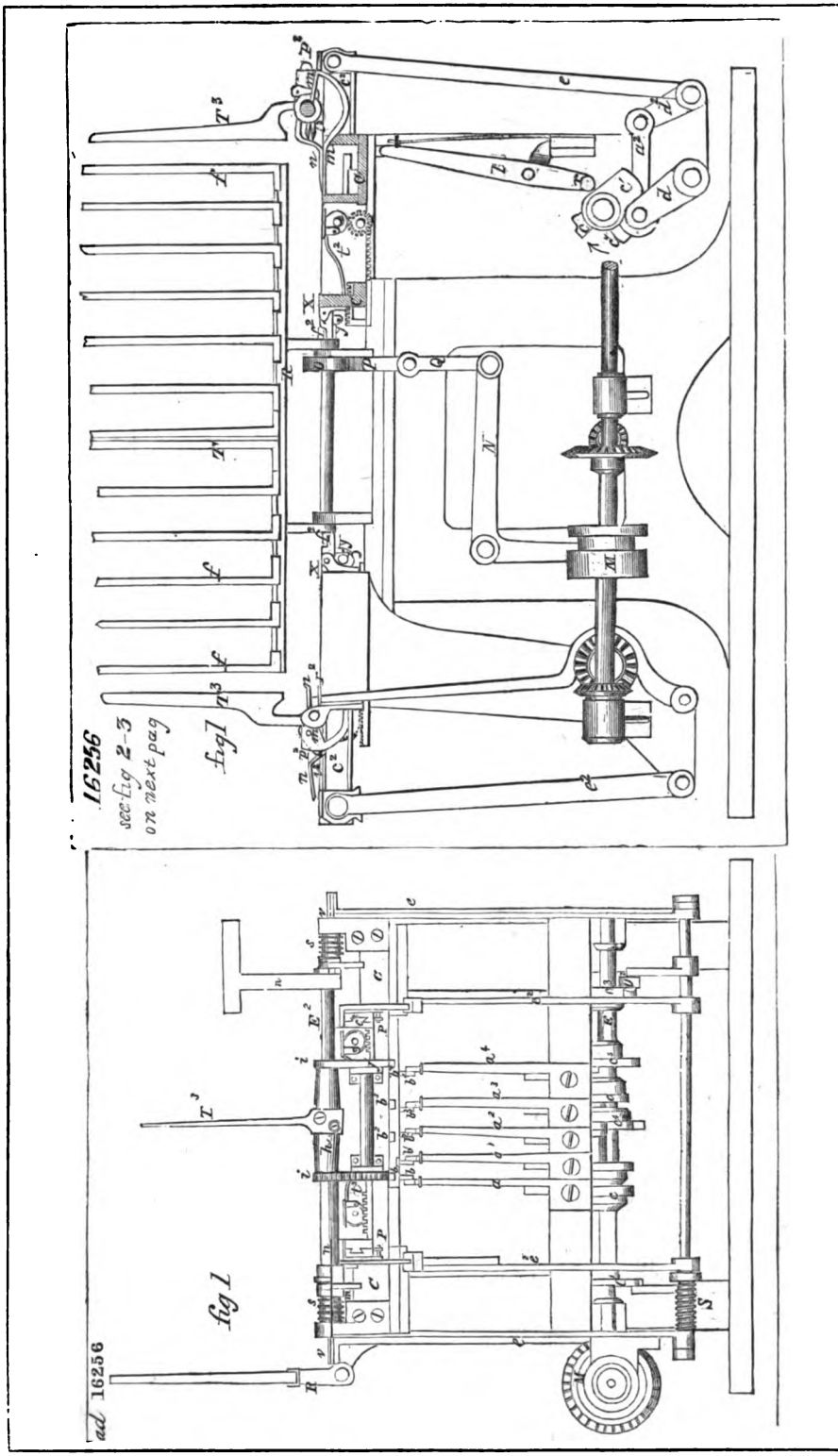

Digitized by Google

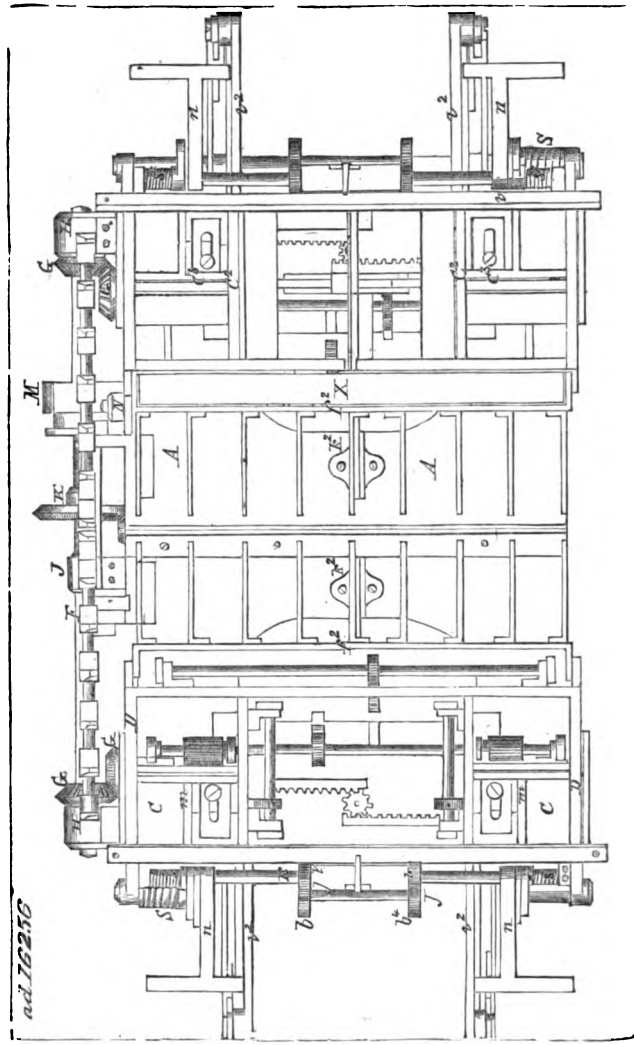

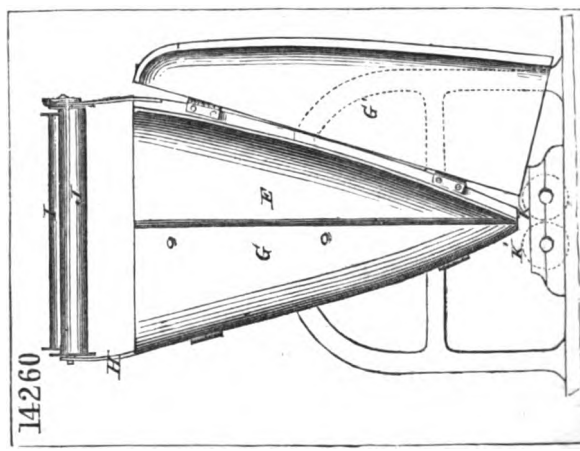

Digitized by Google

14697

fig 1

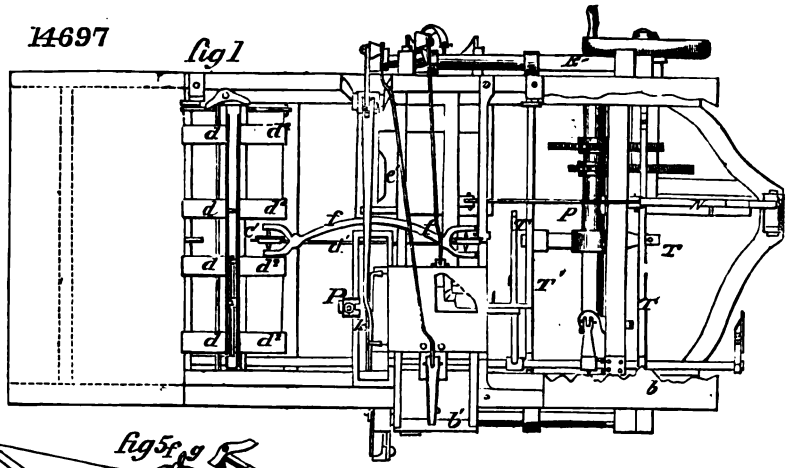

fig 5

fig 2

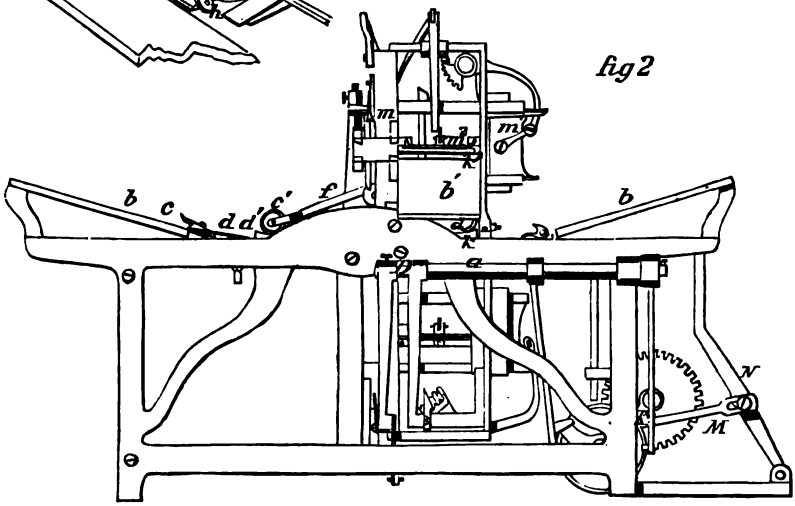

fig 4

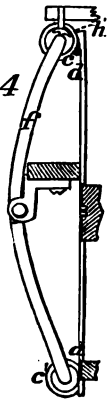

fig 3

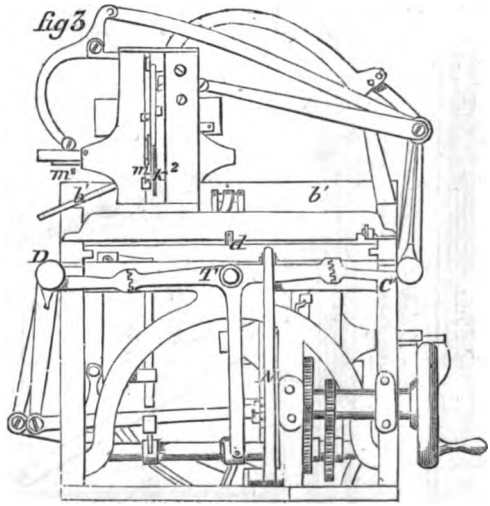

Digitized by Google

15657

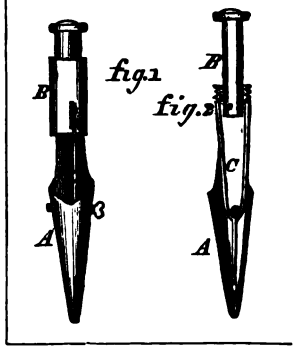

15622

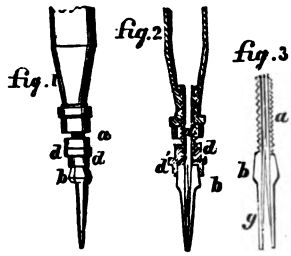

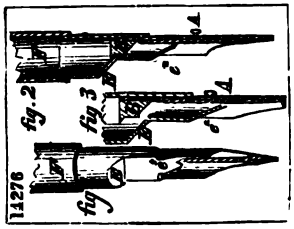

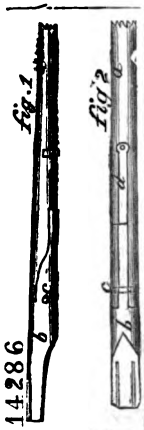

16299

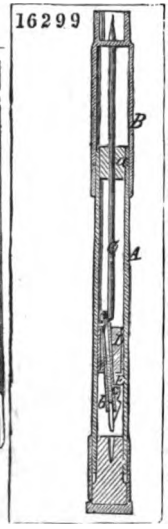

16266

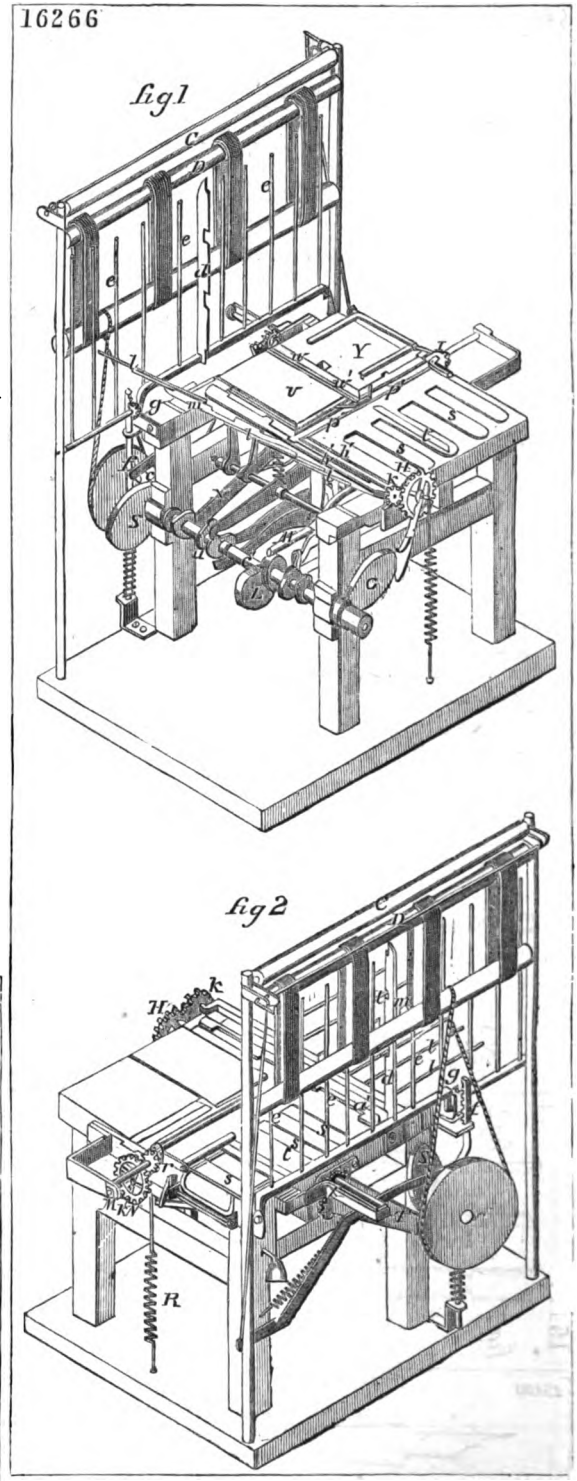

Digitized by Google

15842

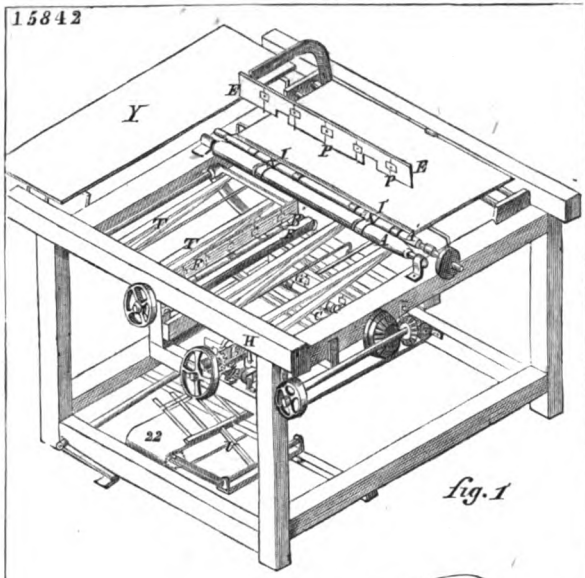

fig. 1

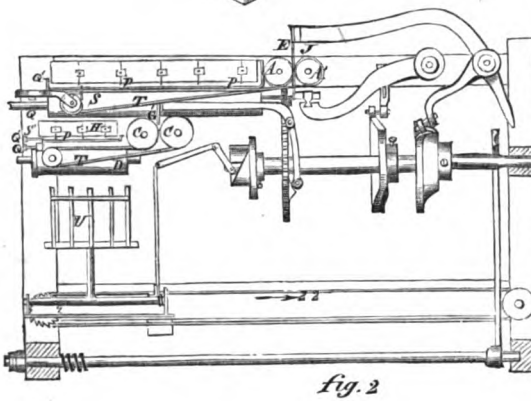

fig. 2

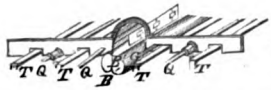

fig. 3

15660

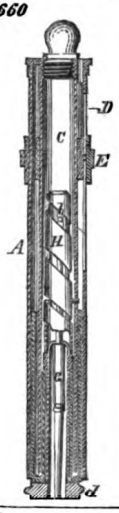

14425

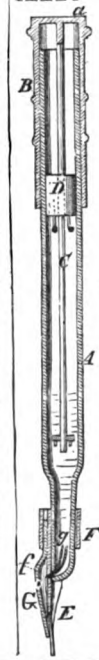

14760

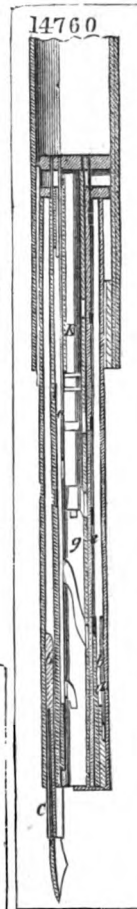

15417

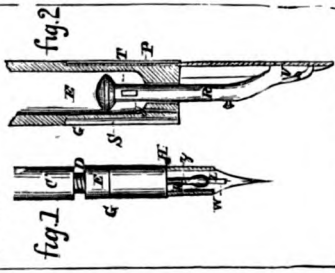

15490

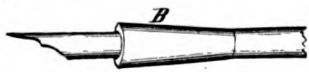

15223

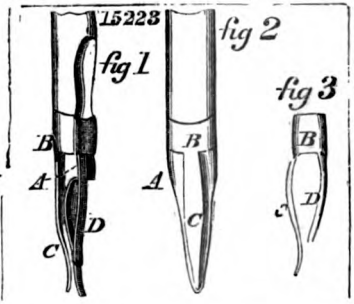

Digitized by Google

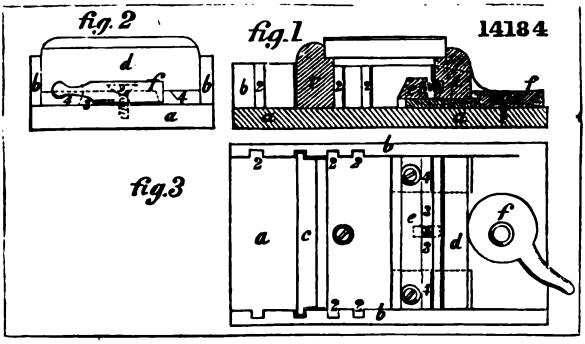

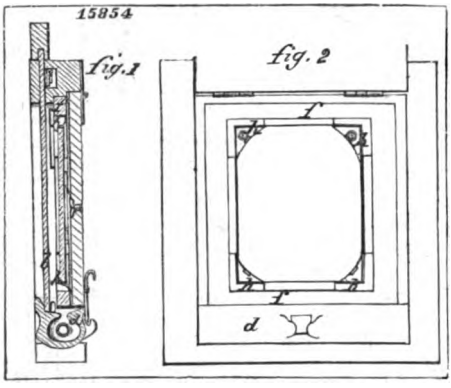

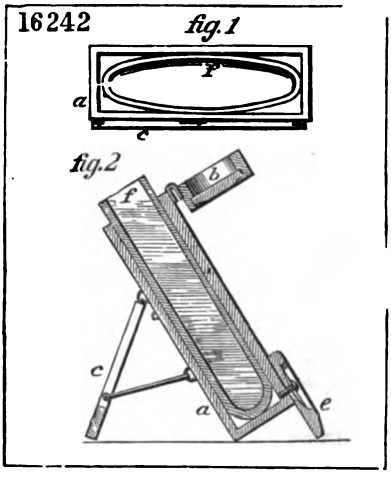

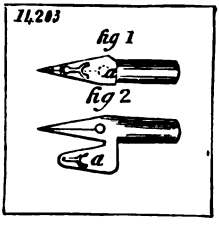

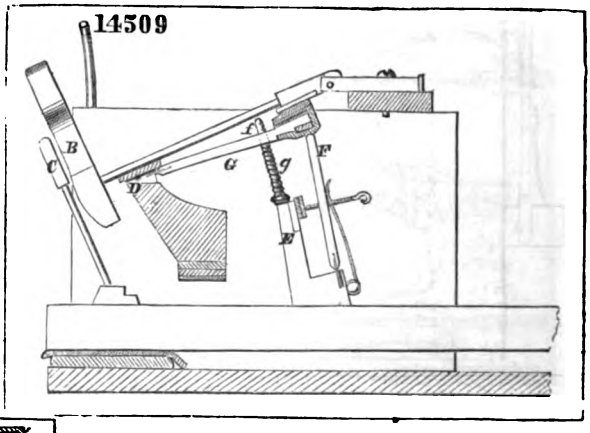

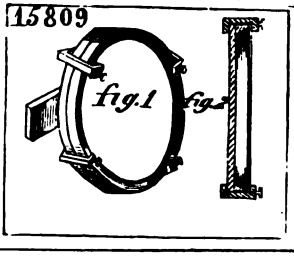

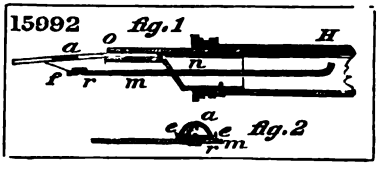

Digitized by Google

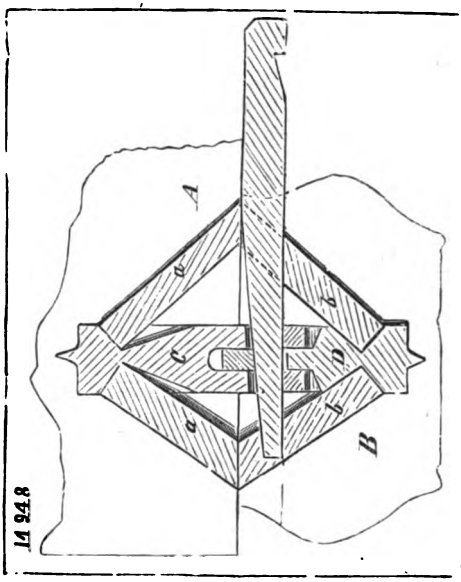

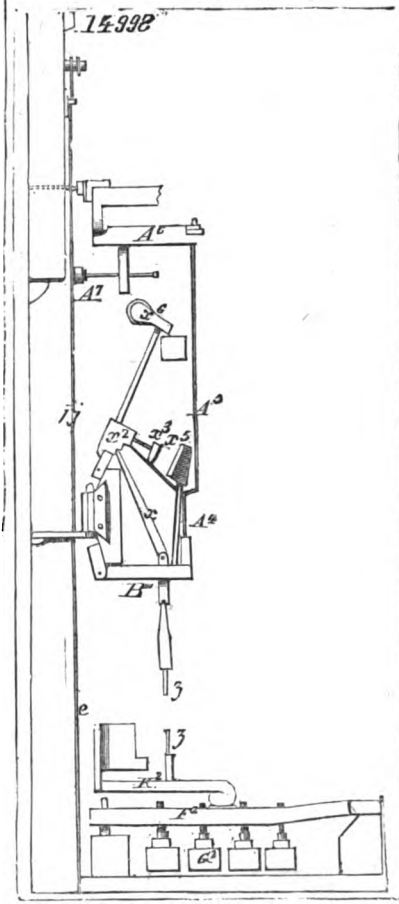

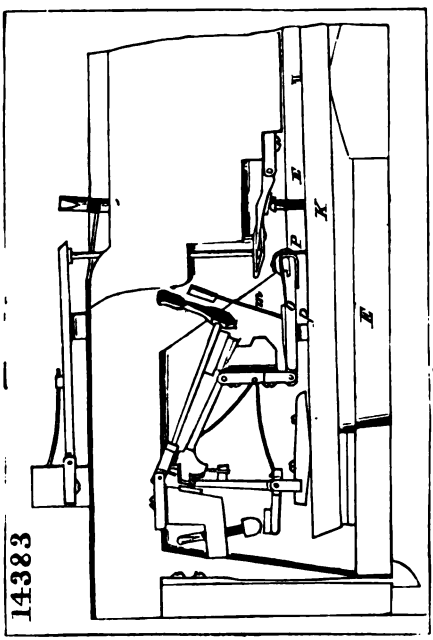

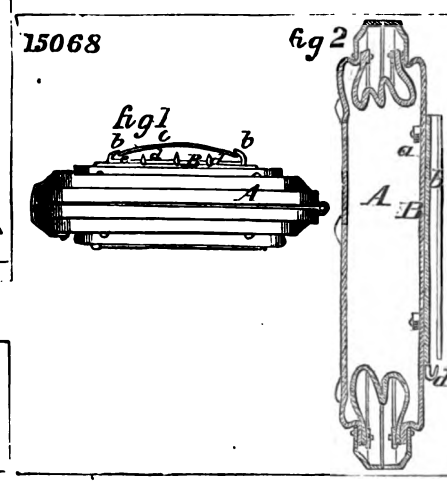

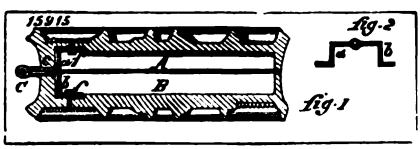

Digitized by Google

15011

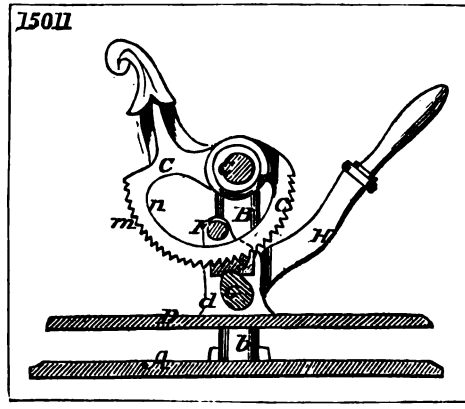

15891

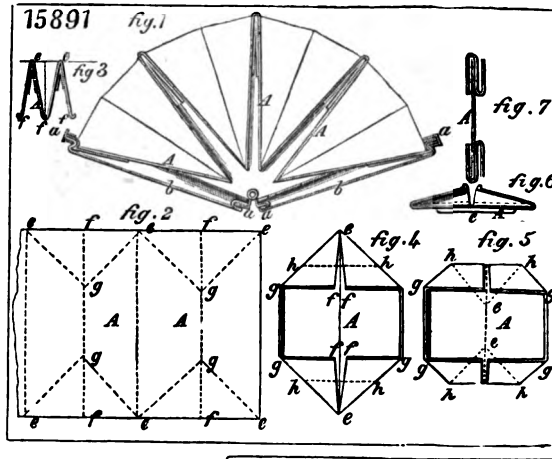

14246

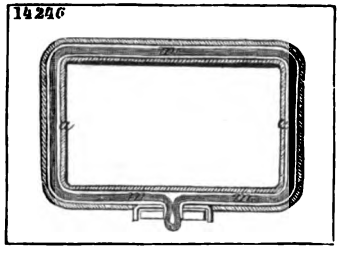

14867

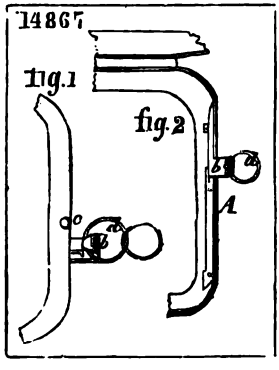

15150

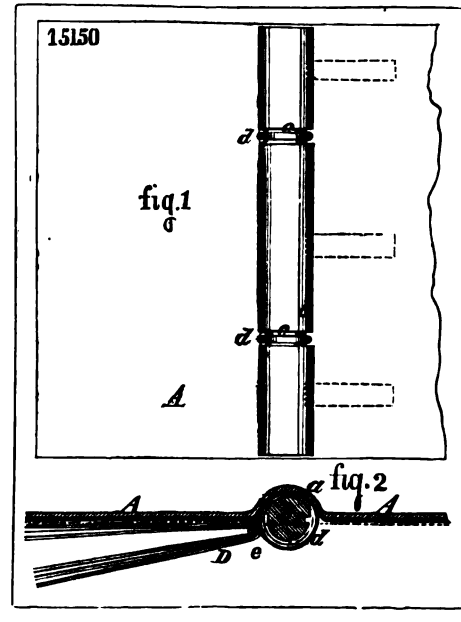

Digitized by Google

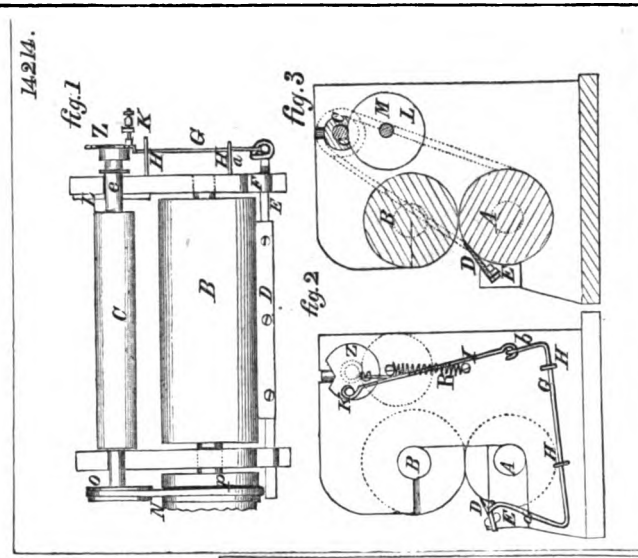

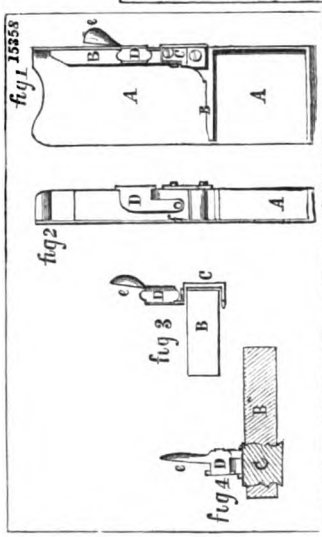

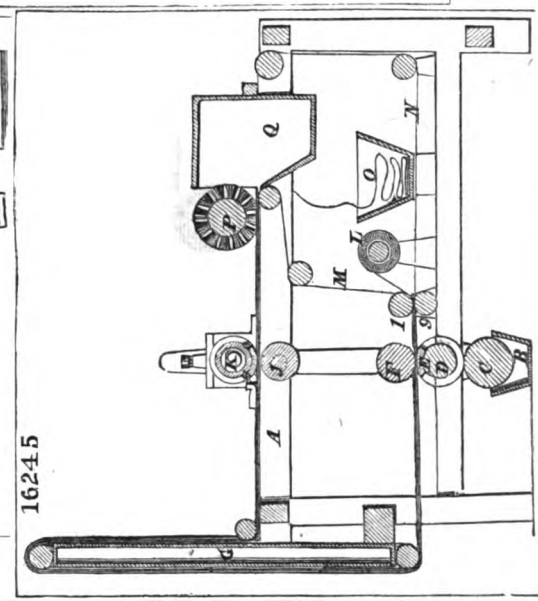

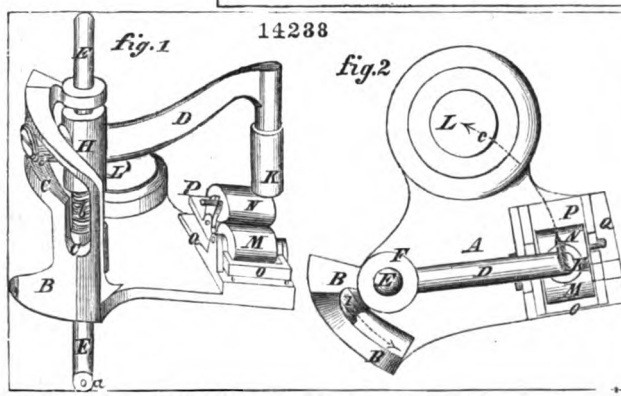

Digitized by Google

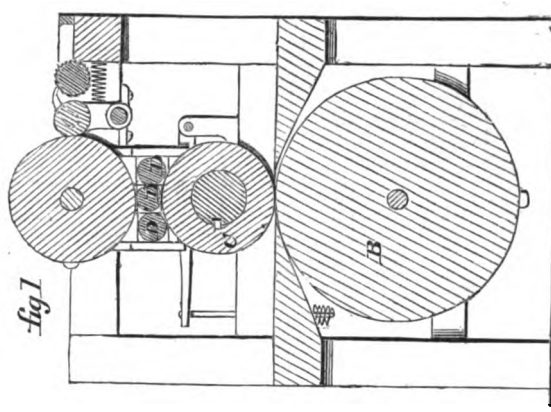

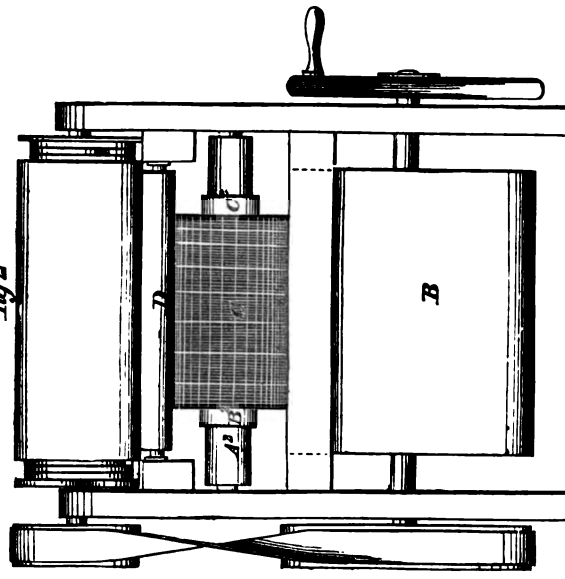

14542

15437

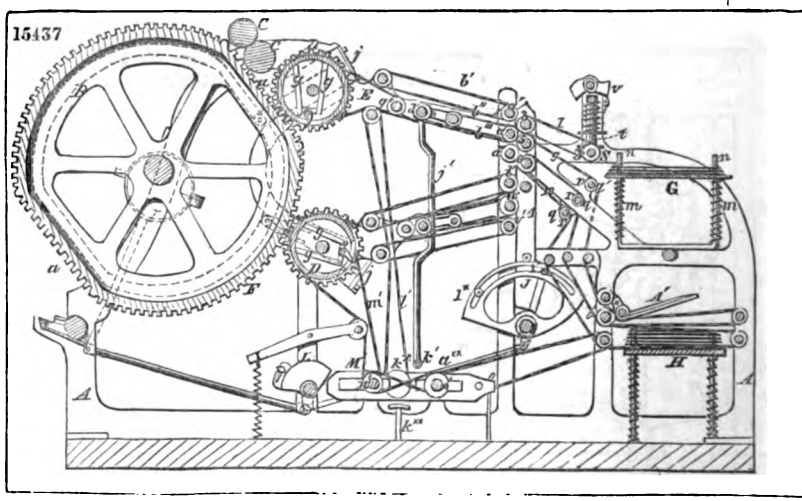

Digitized by Google

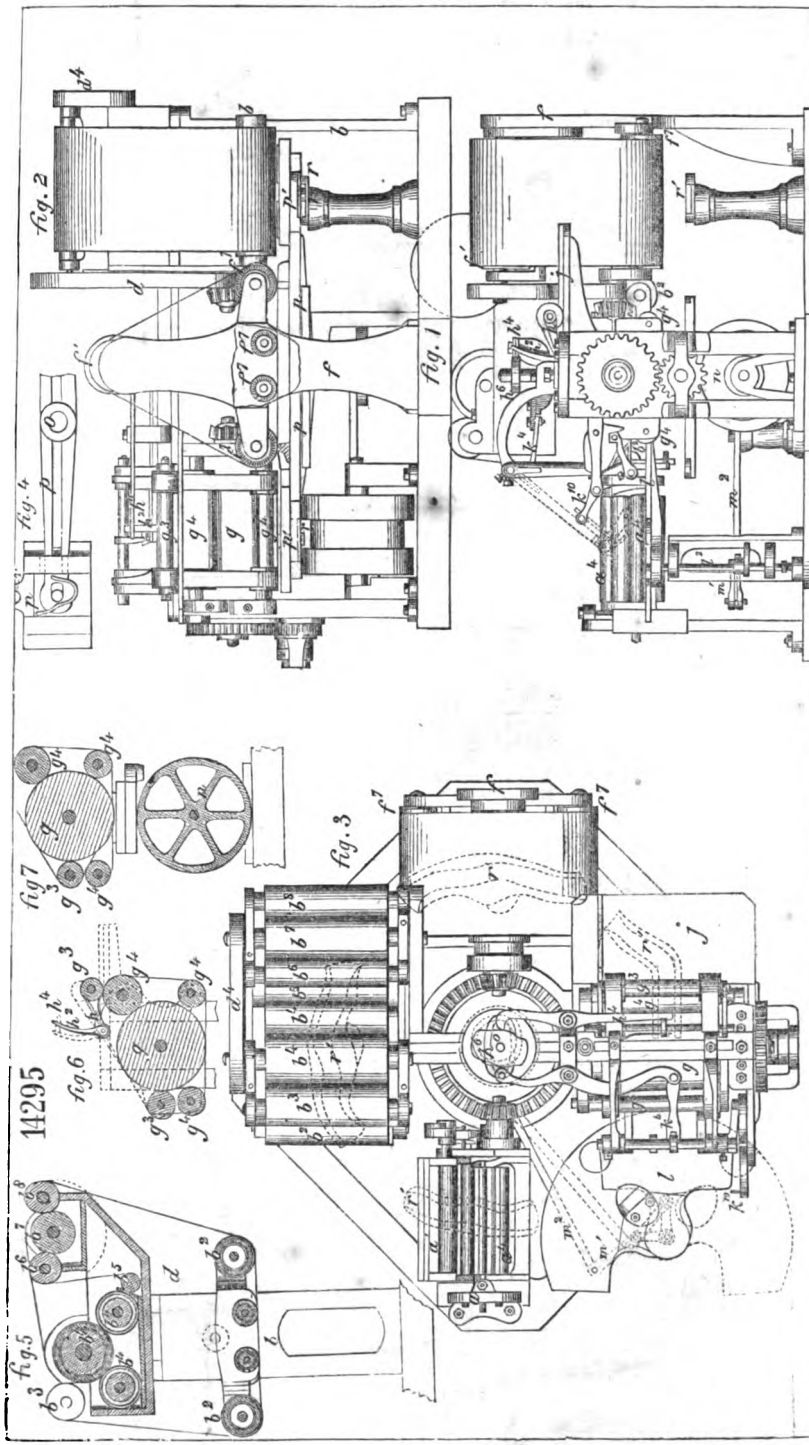

Digitized by Google

14789

fig. 1

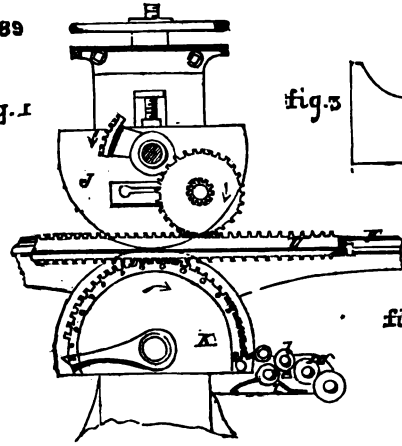

fig. 3

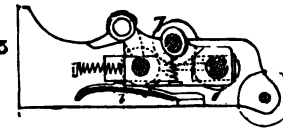

fig 2

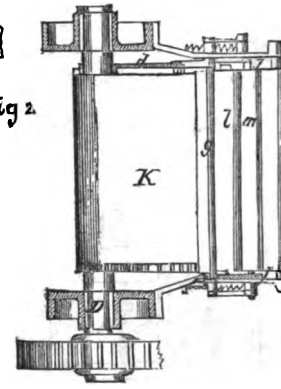

15164

fig. 2

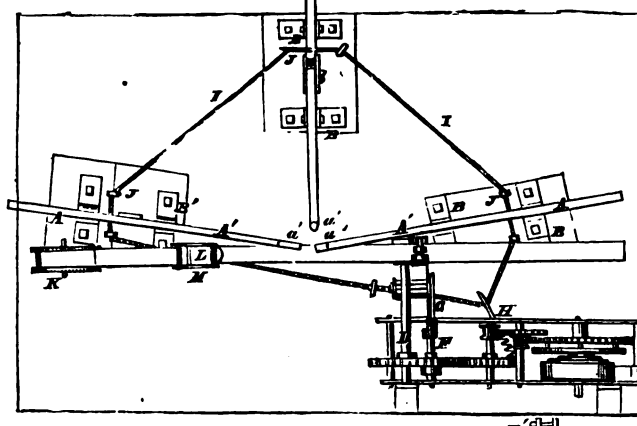

fig. 2

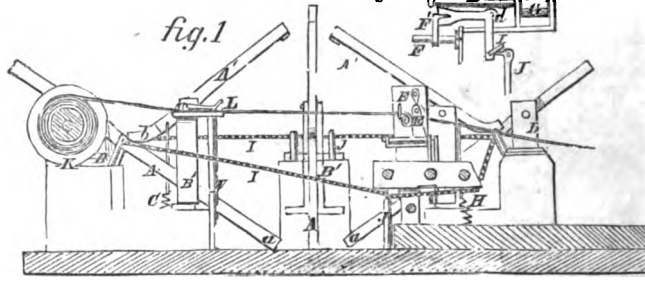

fig. 1

Digitized by Google

14919

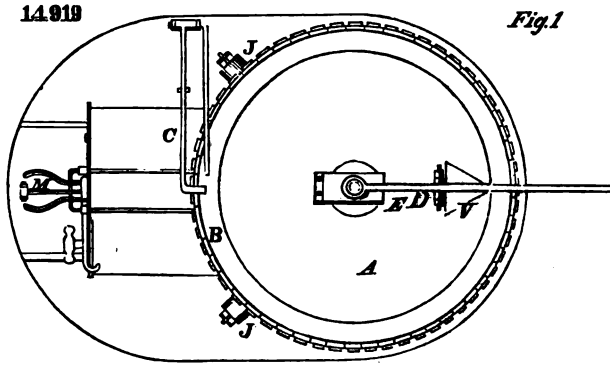

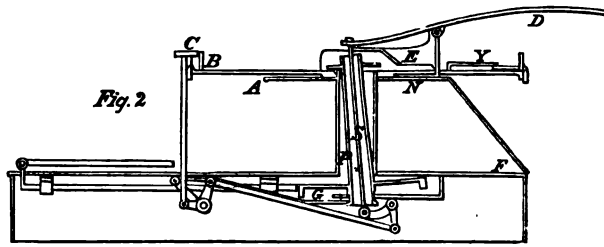

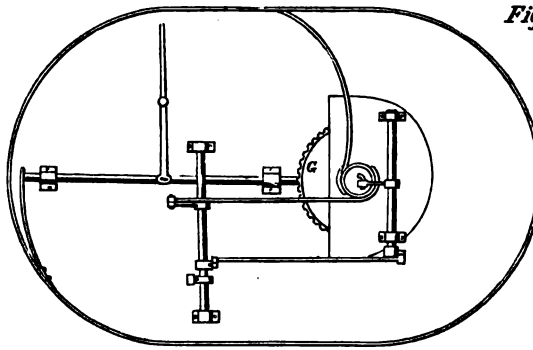

16109

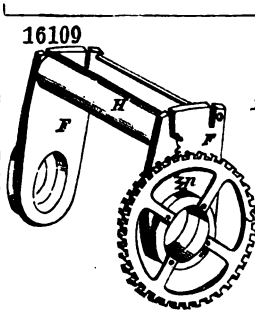

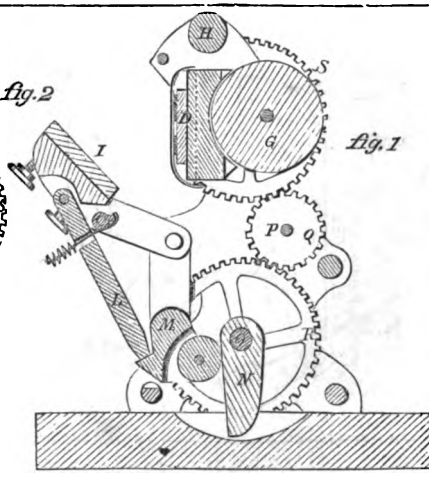

Digitized by Google

14907

fig.1

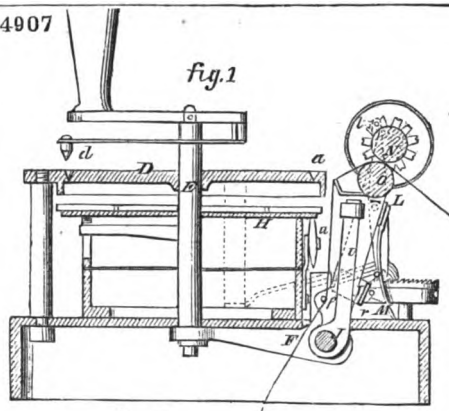

fig.2

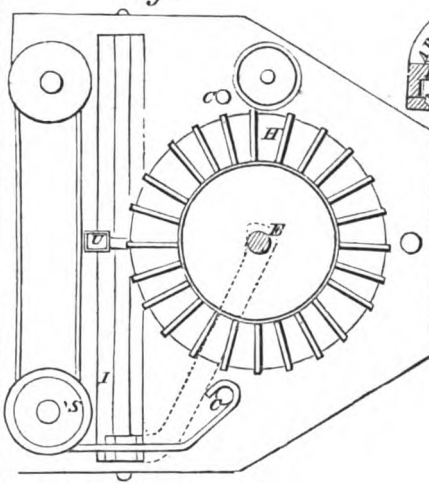

fig.3

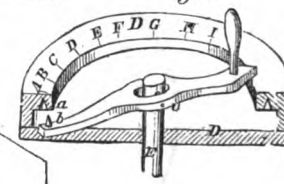

16263

fig 1

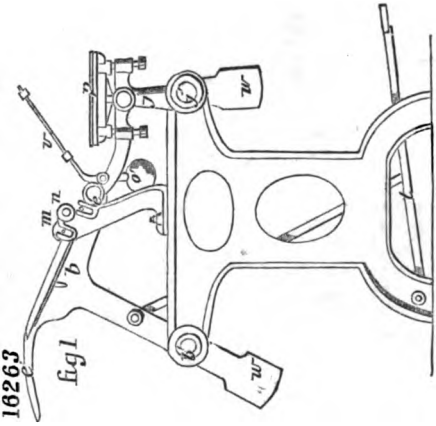

fig 2

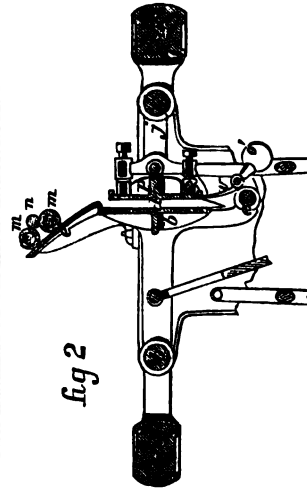

Digitized by Google

14016

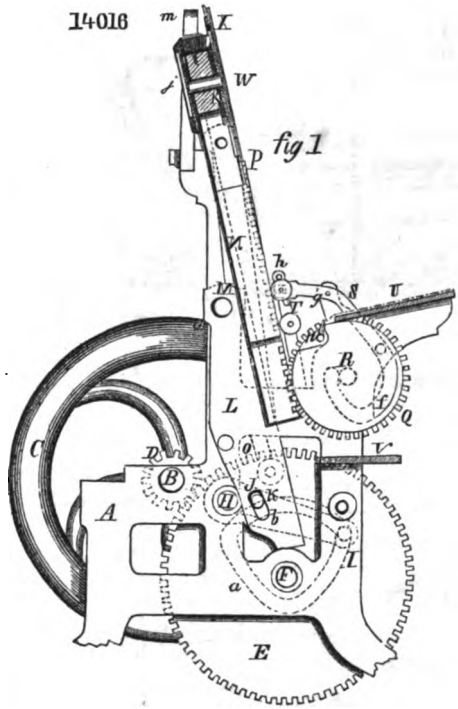

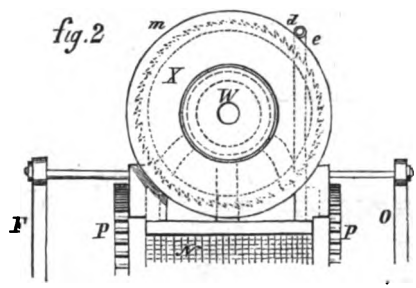

15740

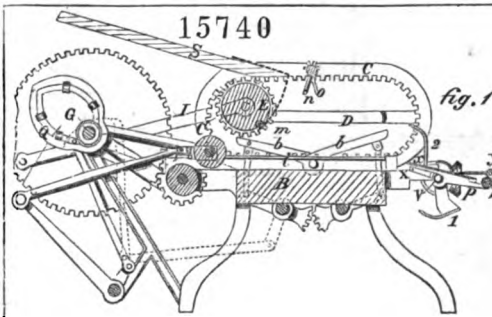

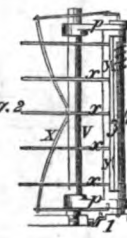

Digitized by Google

14558

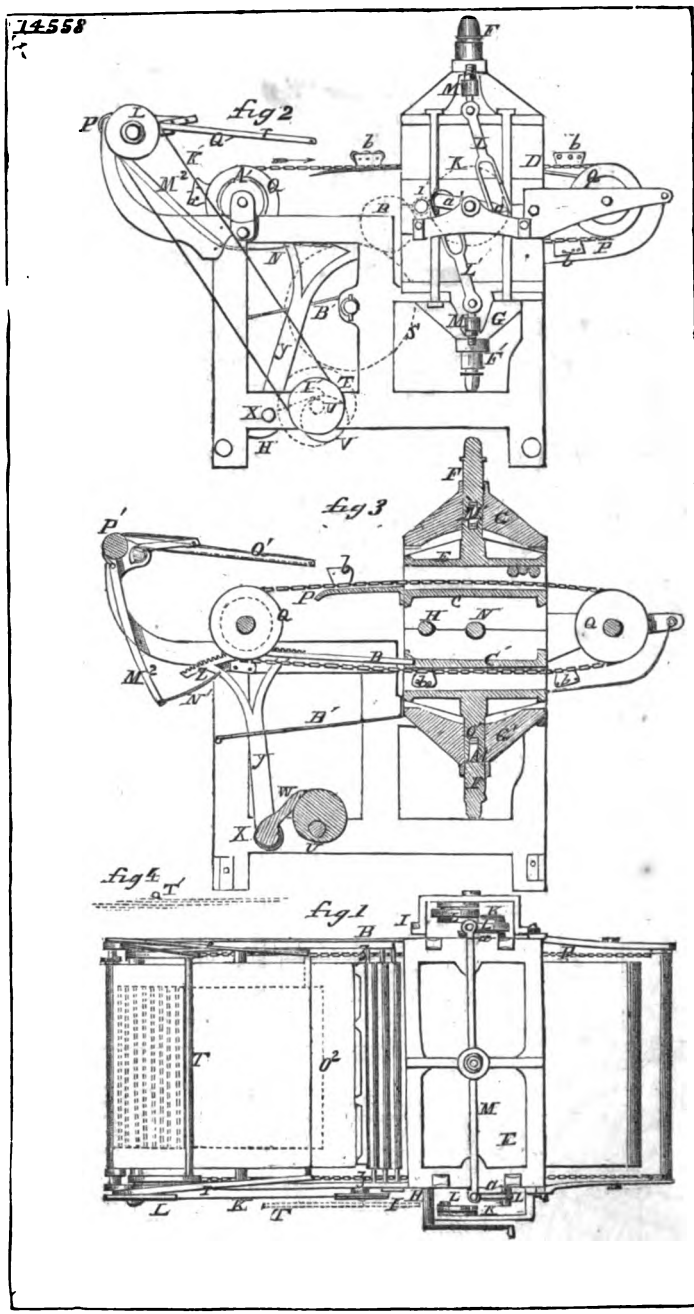

Digitized by Google

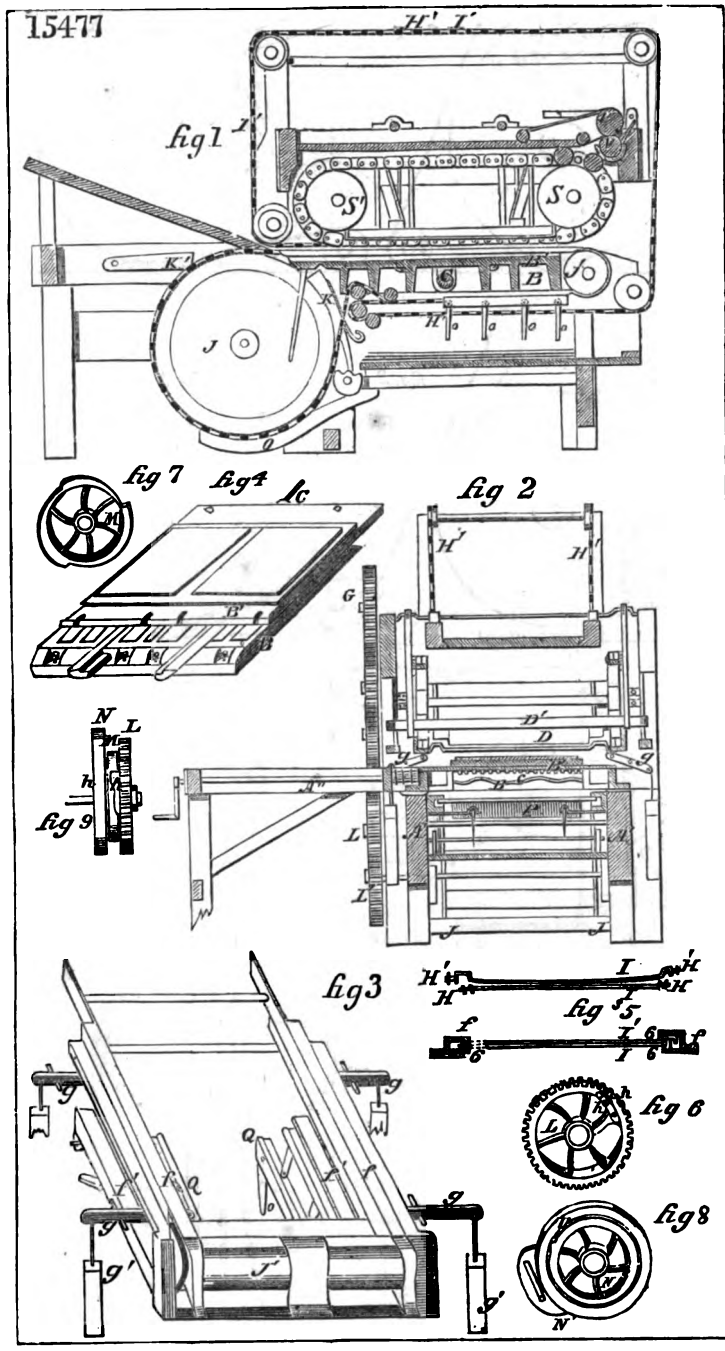

Digitized by Google

16138

fig. 1

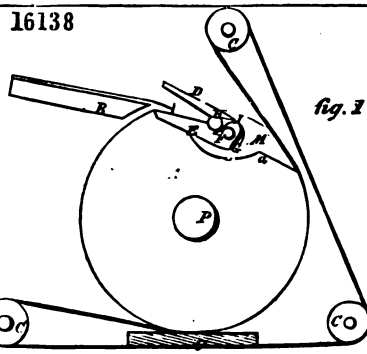

fig. 4

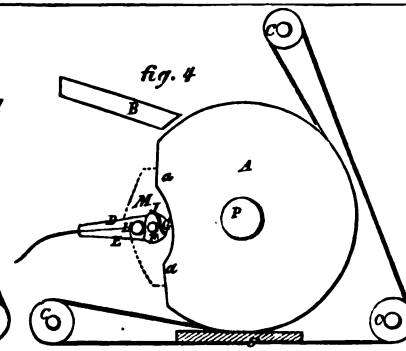

fig. 2

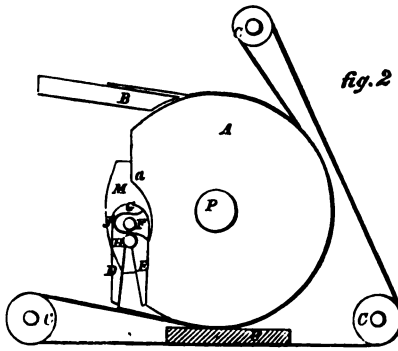

fig. 3

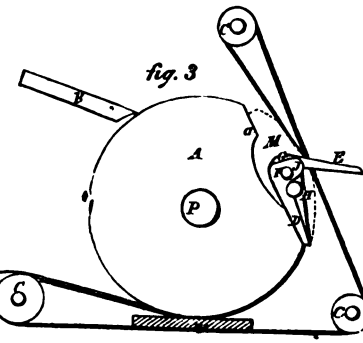

16221

fig. 1

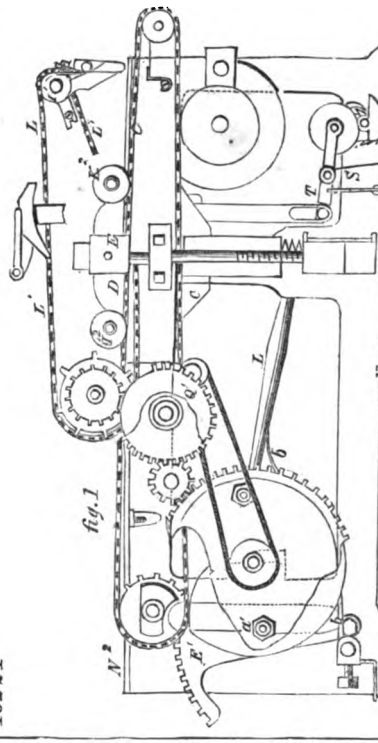

fig. 4

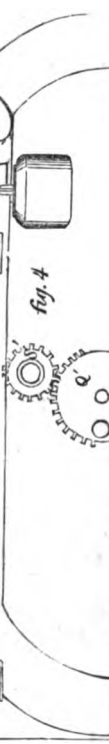

fig. 3

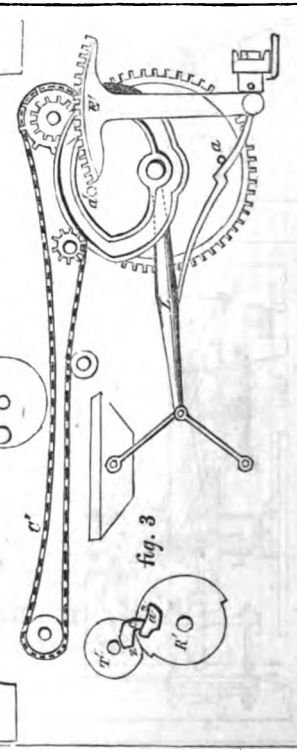

Digitized by Google

16168

fig. 1

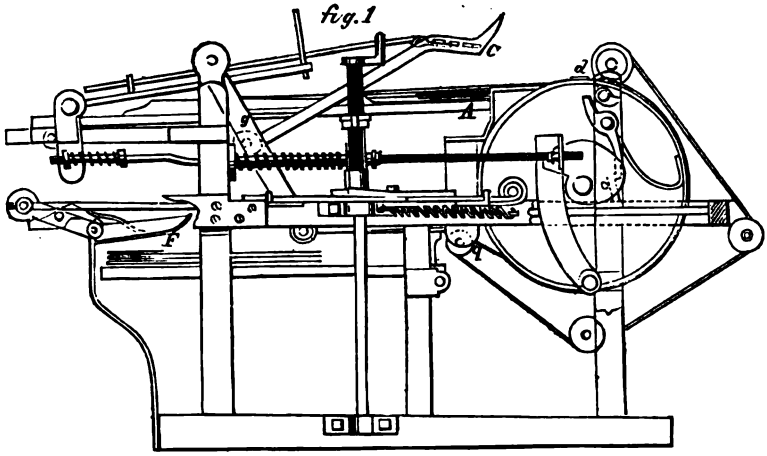

fig. 2

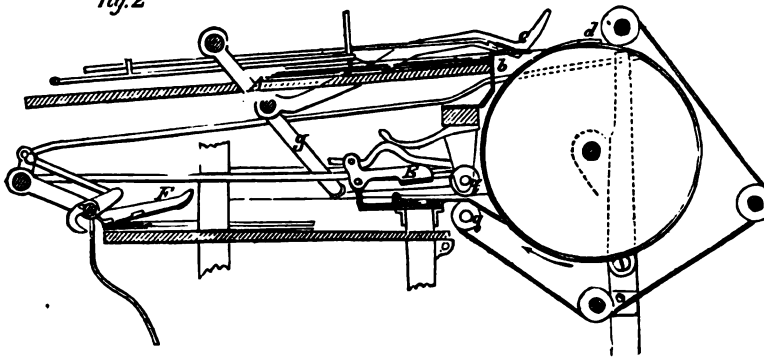

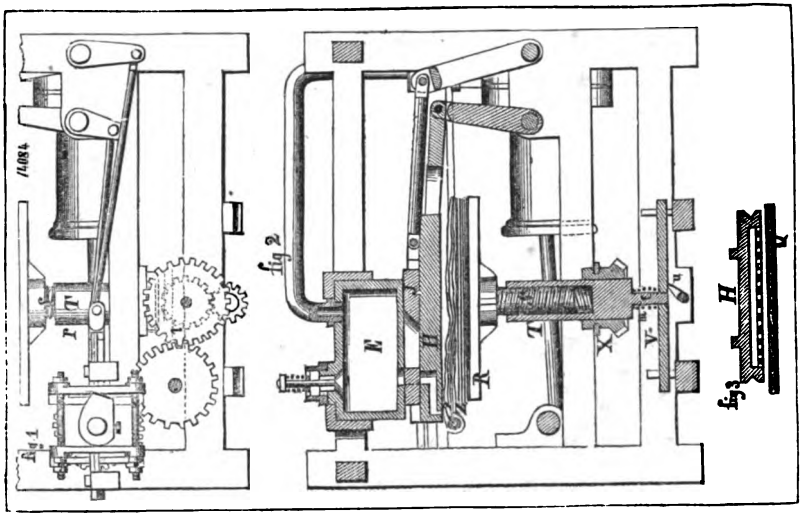

Digitized by Google

15639

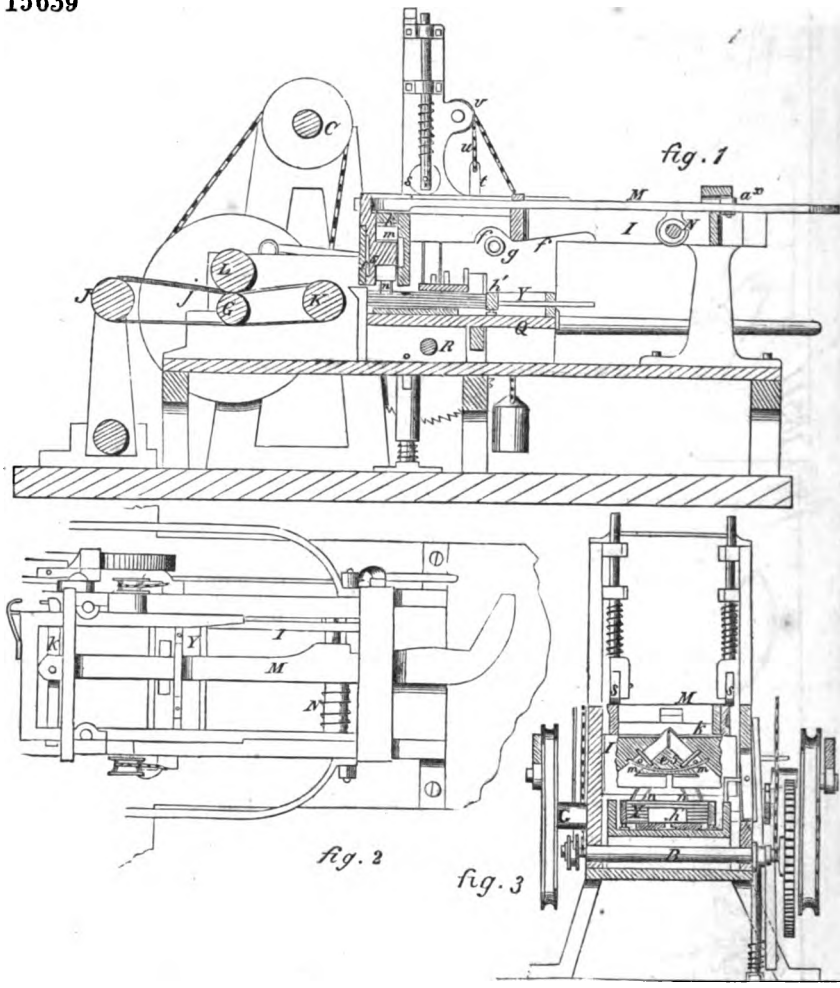

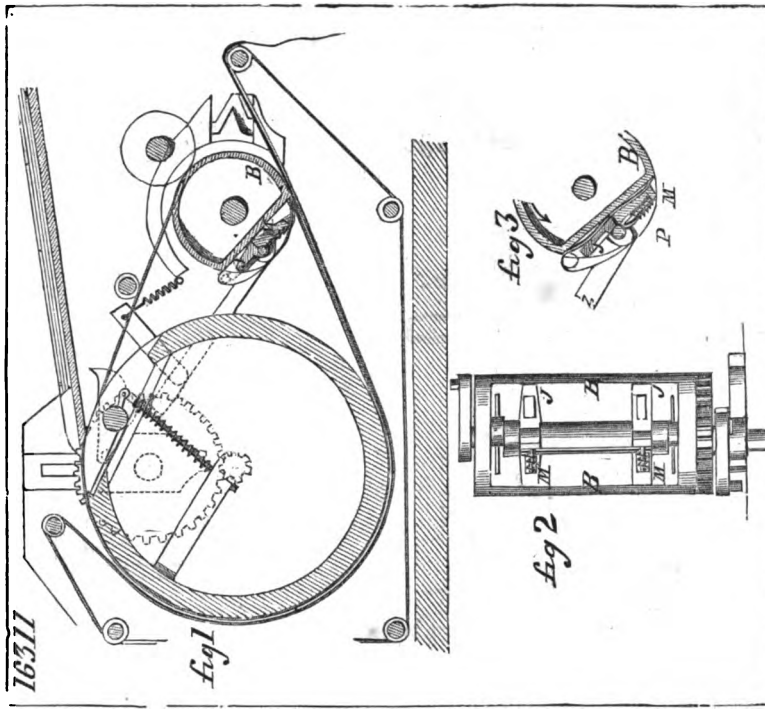

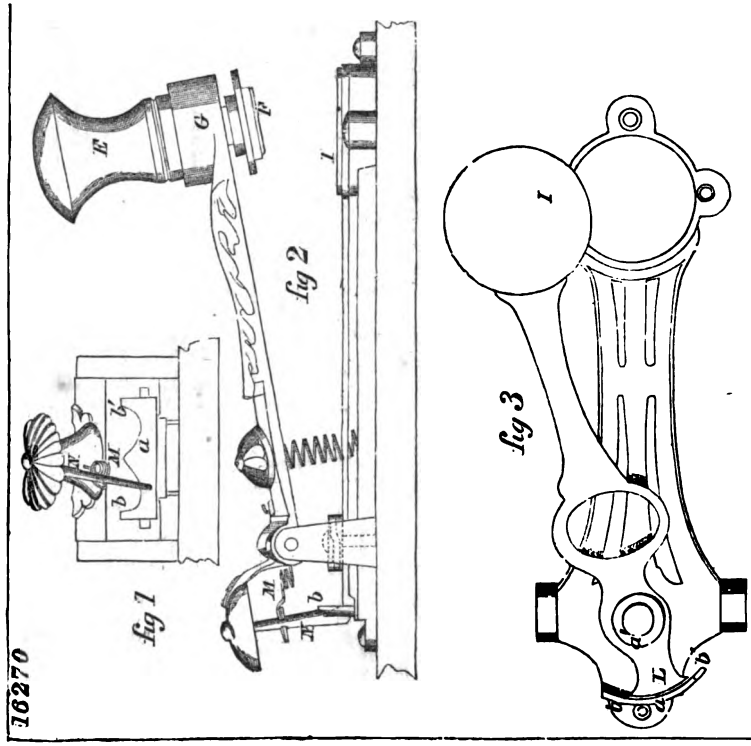

Digitized by Google

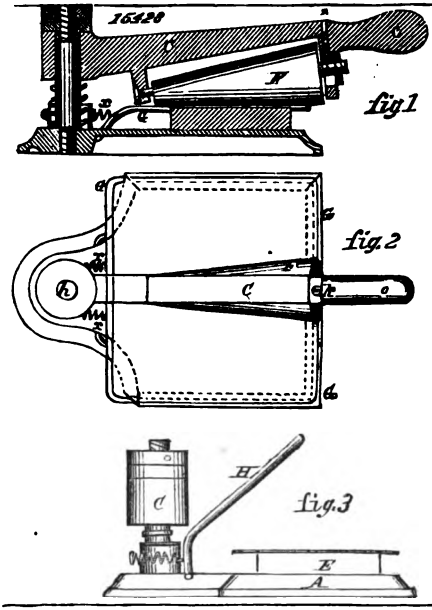

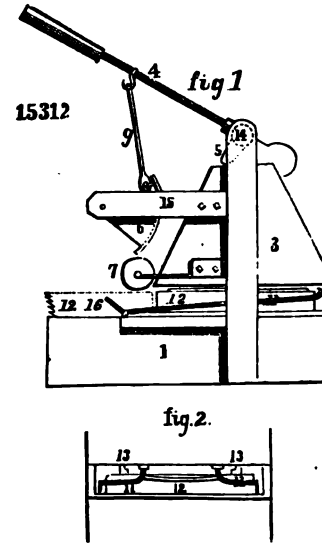

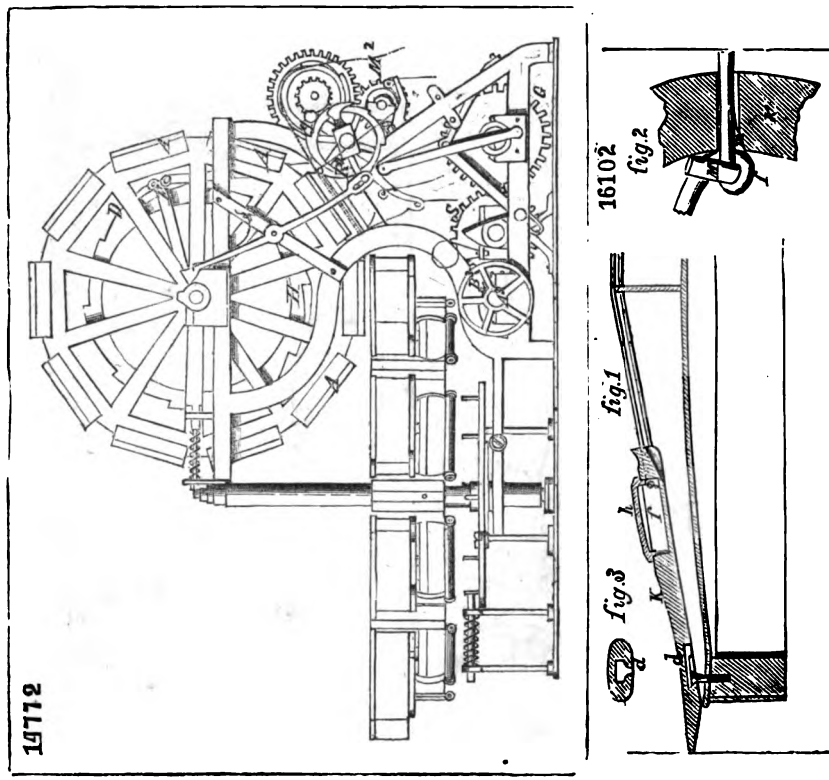

Digitized by Google

15574

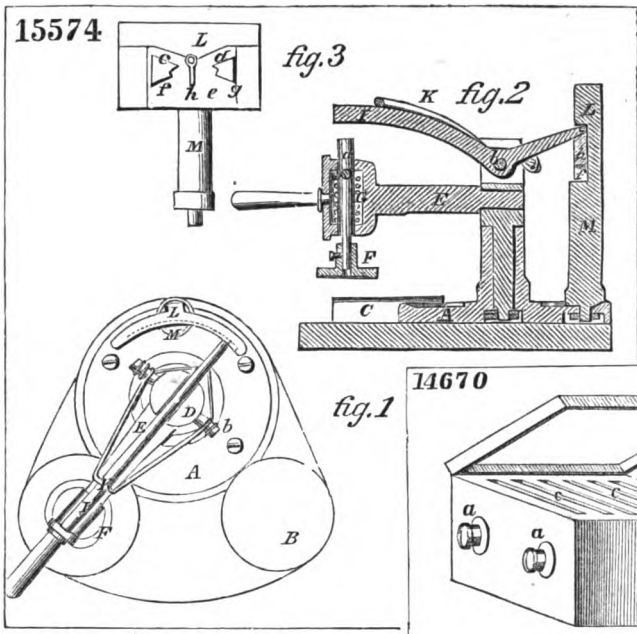

14670

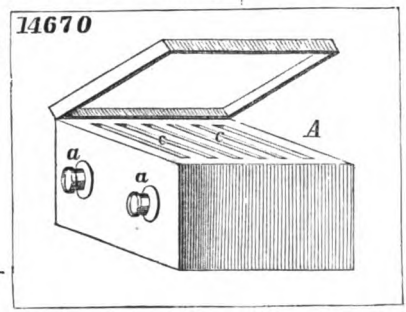

14860

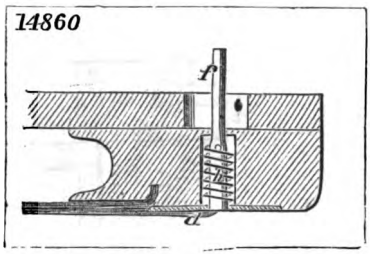

15764

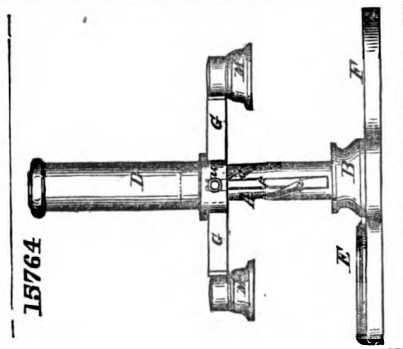

14548

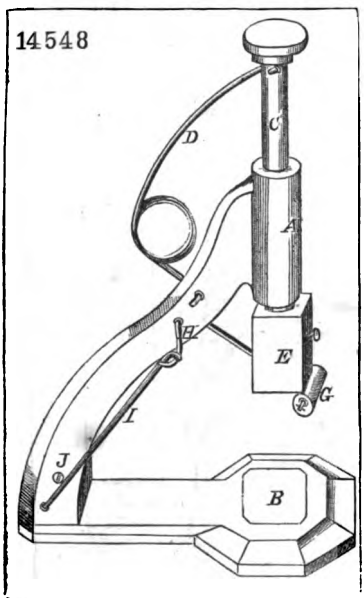

16167

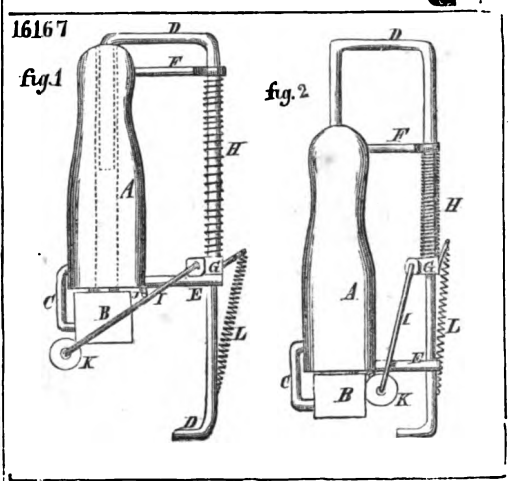

Digitized by Google

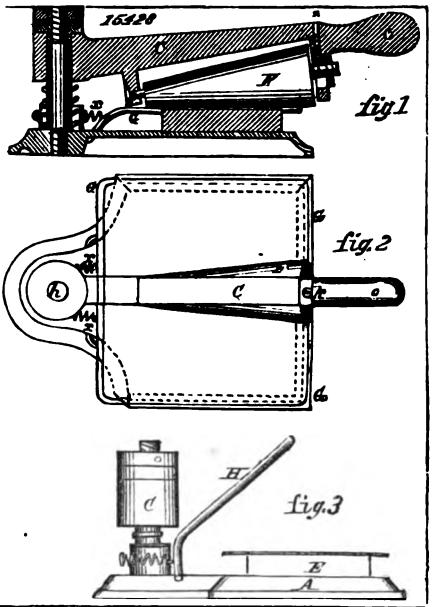

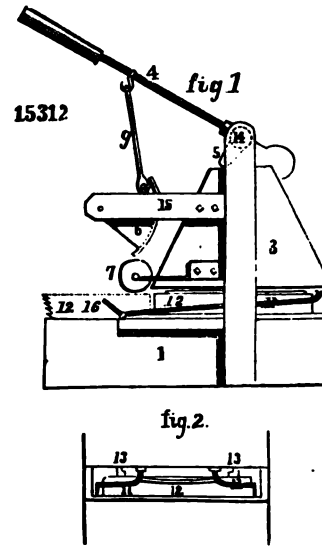

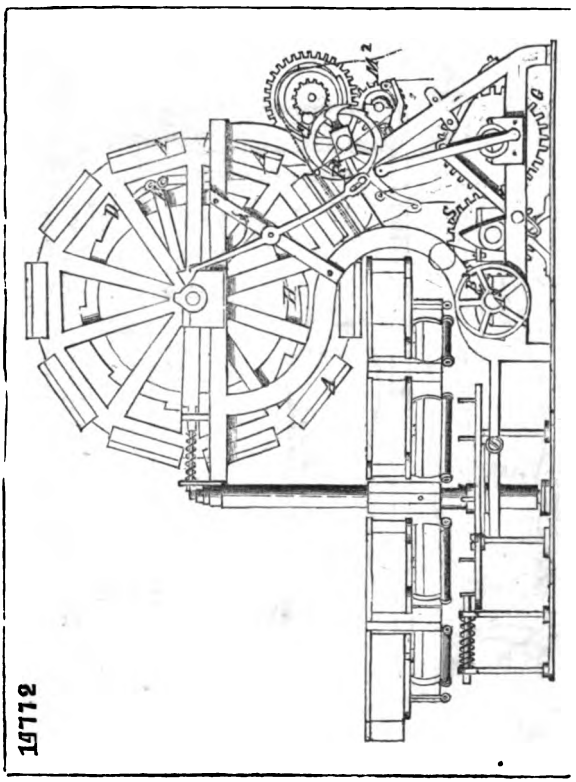

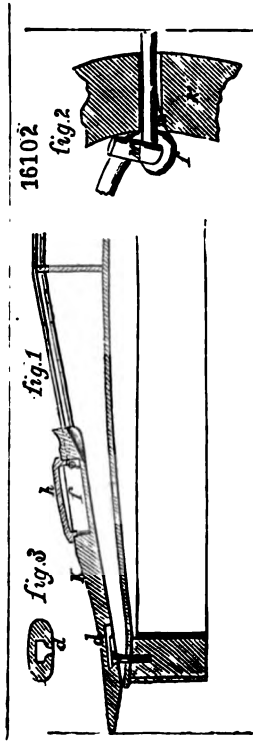

Digitized by Google

15574

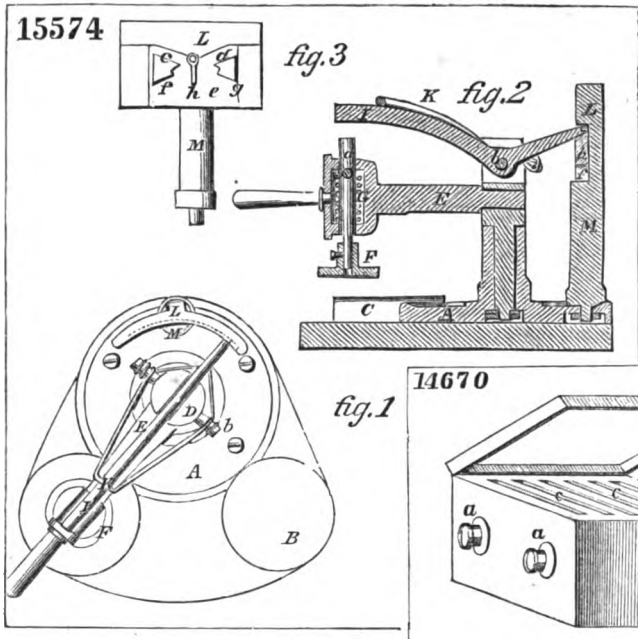

14670

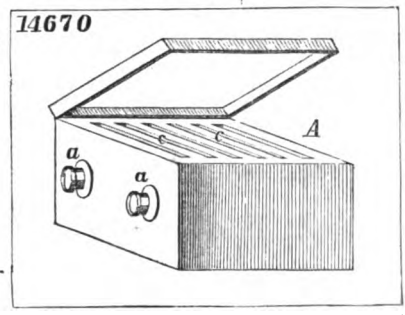

14860

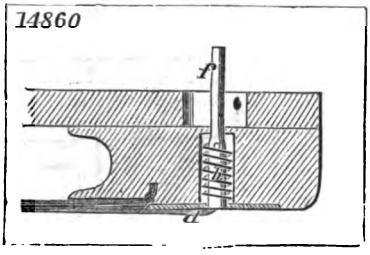

15764

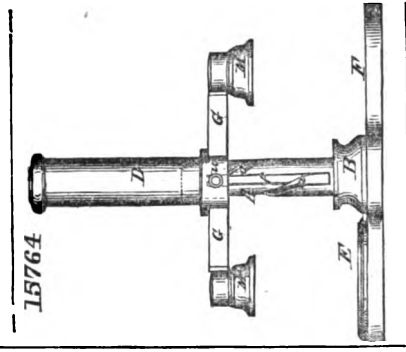

14548

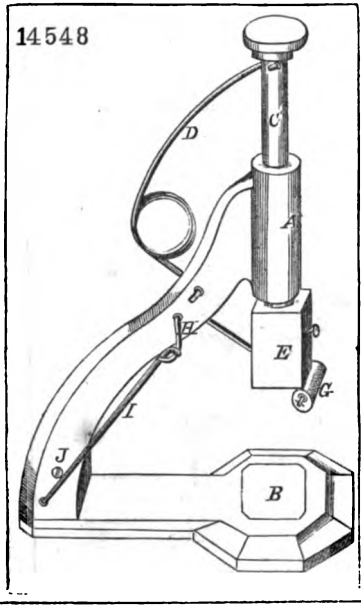

16167

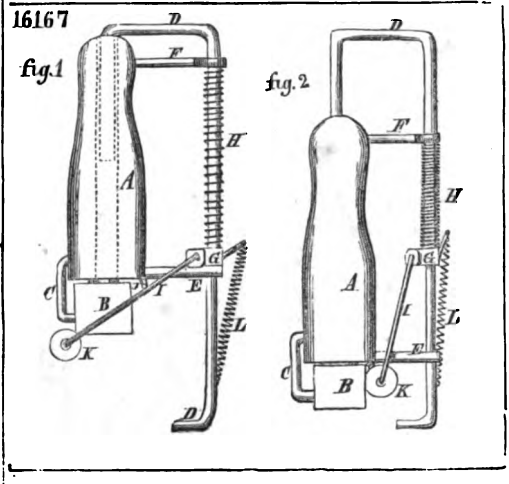

Digitized by Google

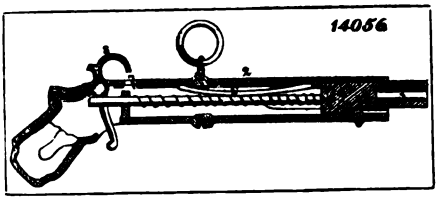

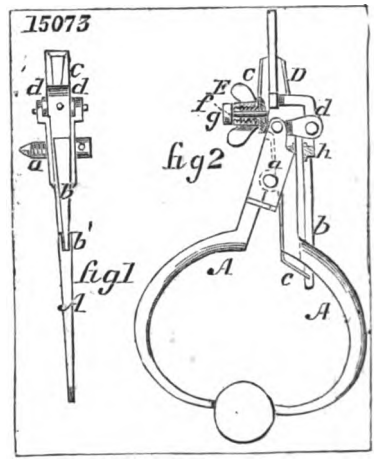

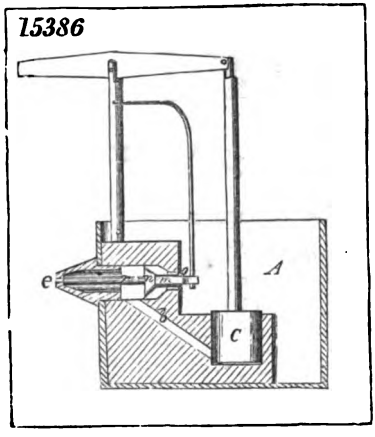

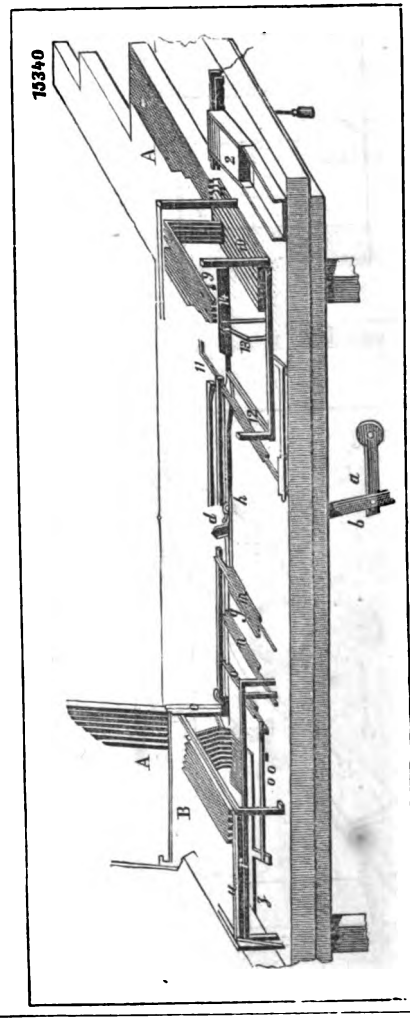

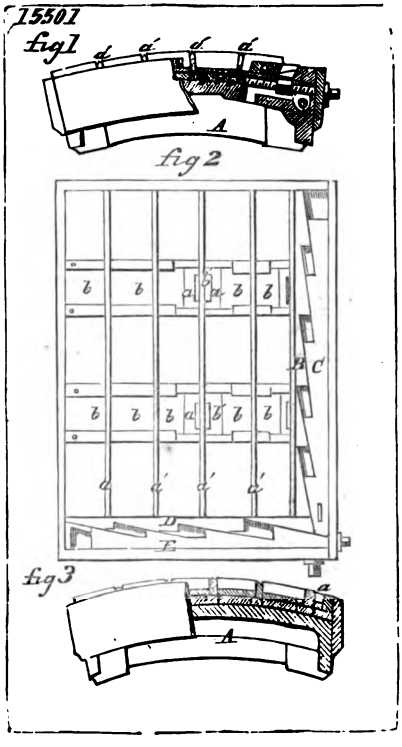

Digitized by Google

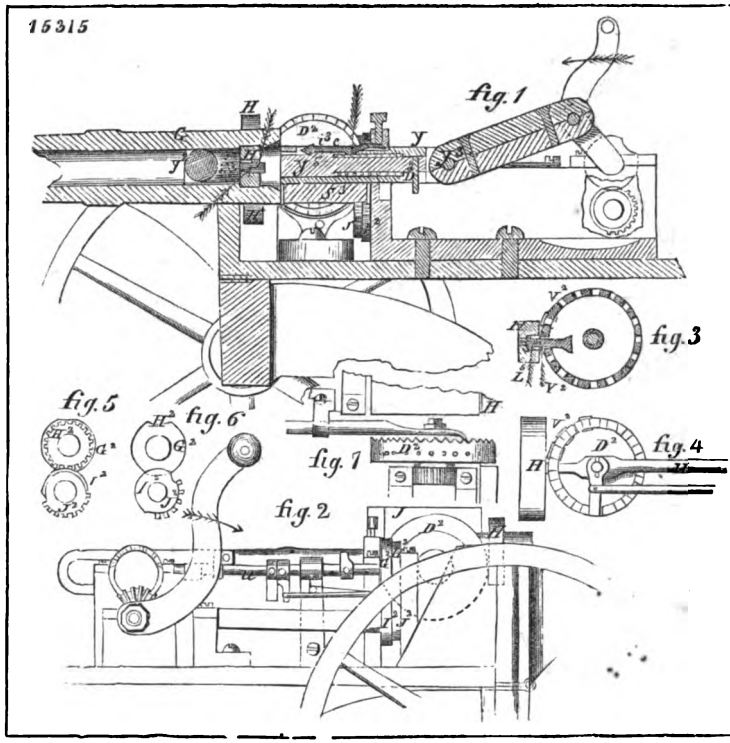

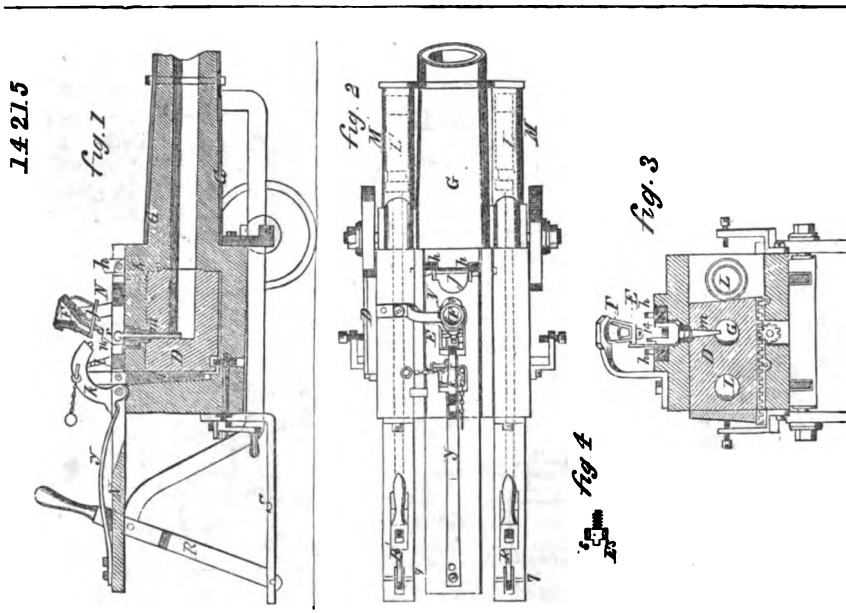

Digitized by Google

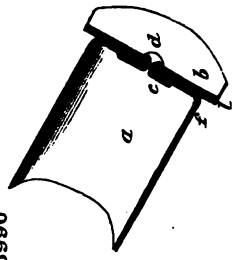

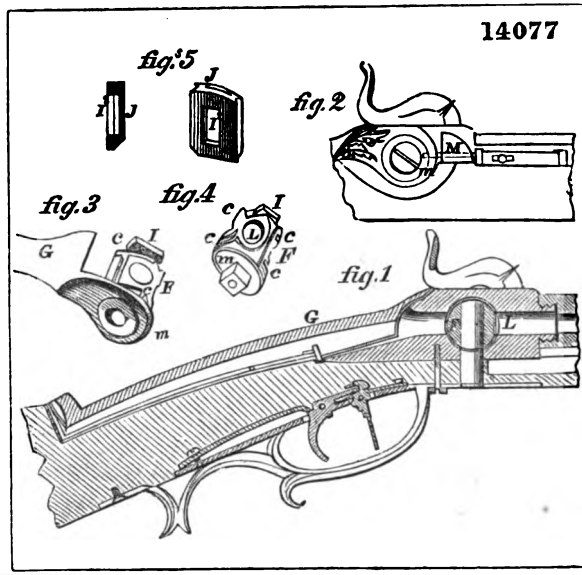

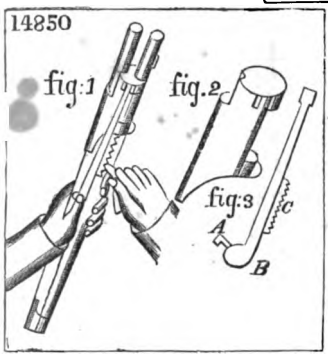

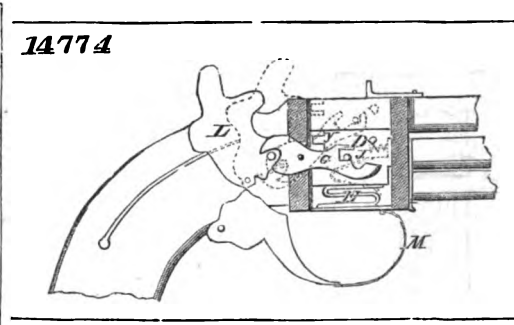

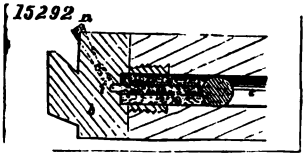

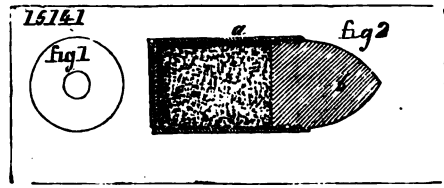

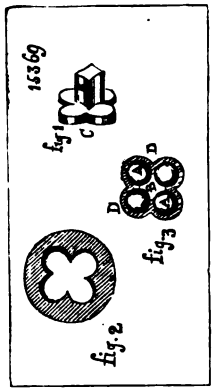

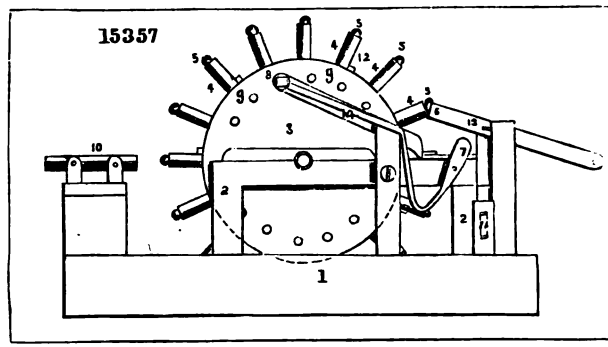

Digitized by Google

14085

fig. 1

fig. 2

fig. 3

fig. 4

14905

fig. 1

fig. 2

fig. 3

14667

fig. 1

fig. 2

15041

Digitized by Google

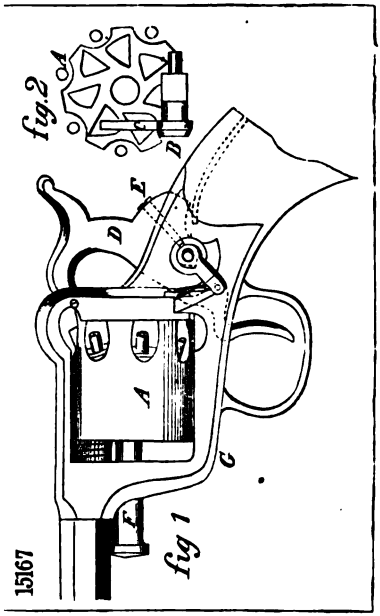

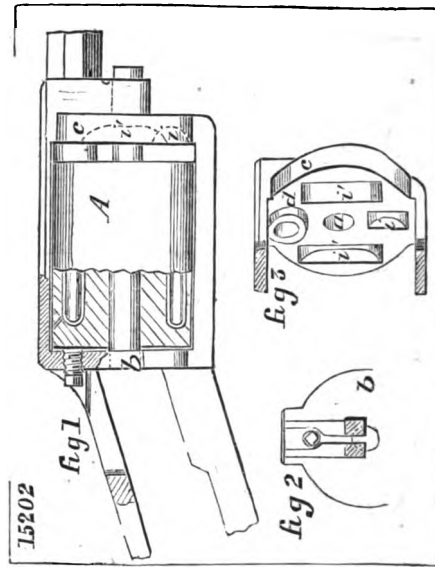

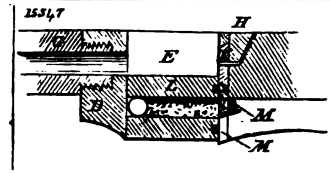

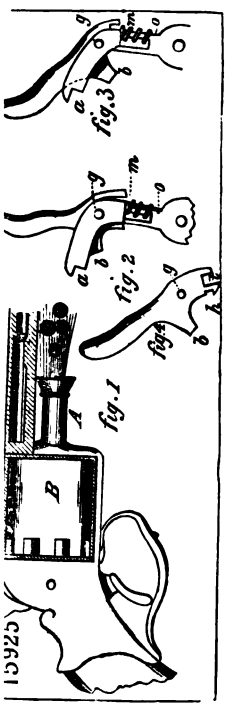

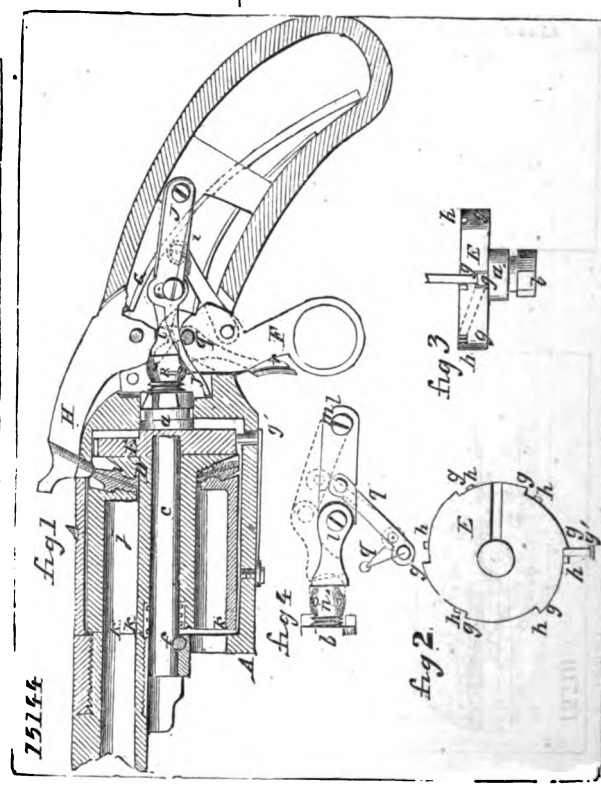

Digitized by Google

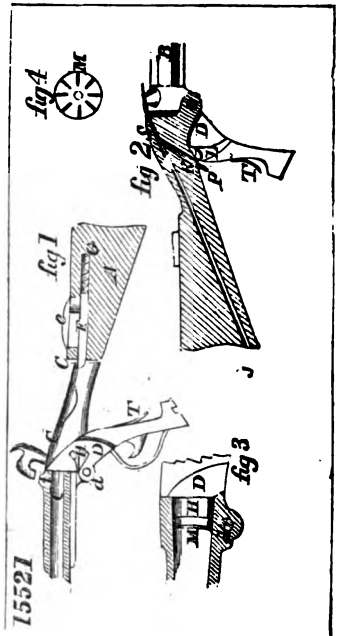

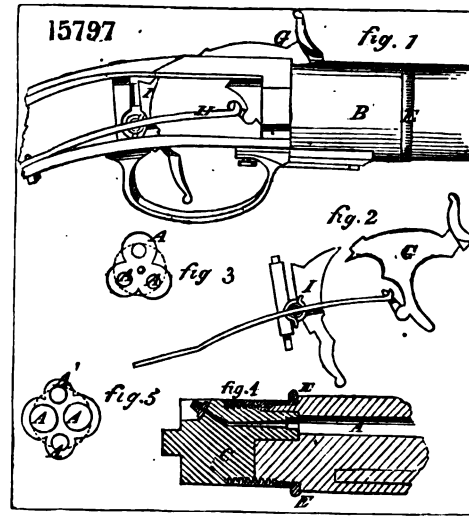

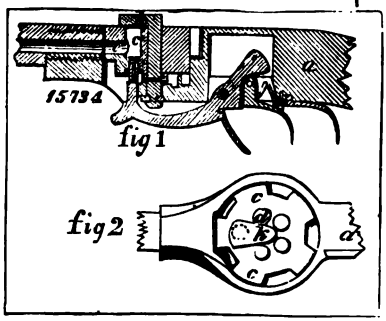

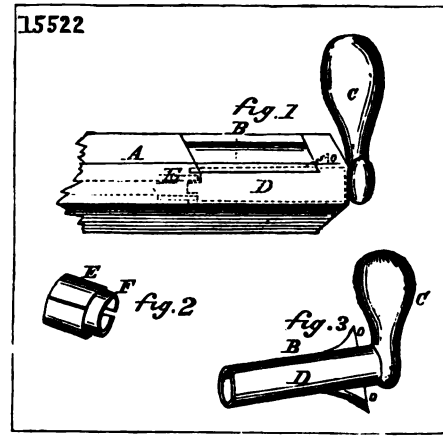

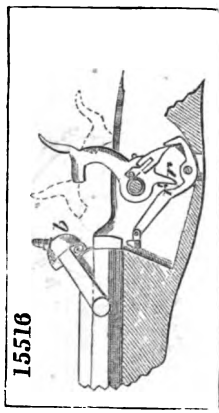

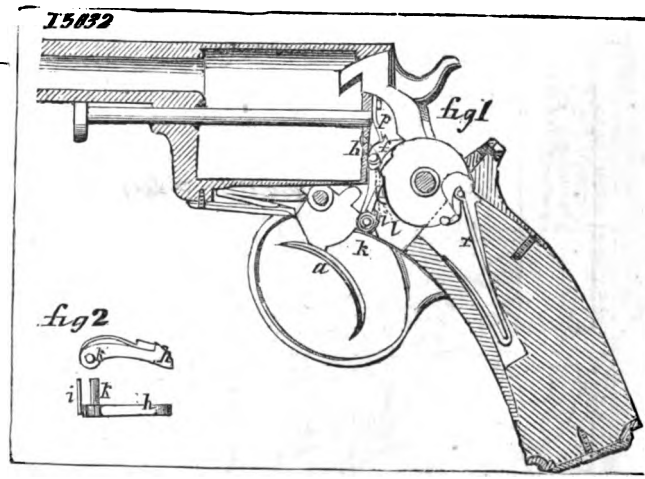

Digitized by Google

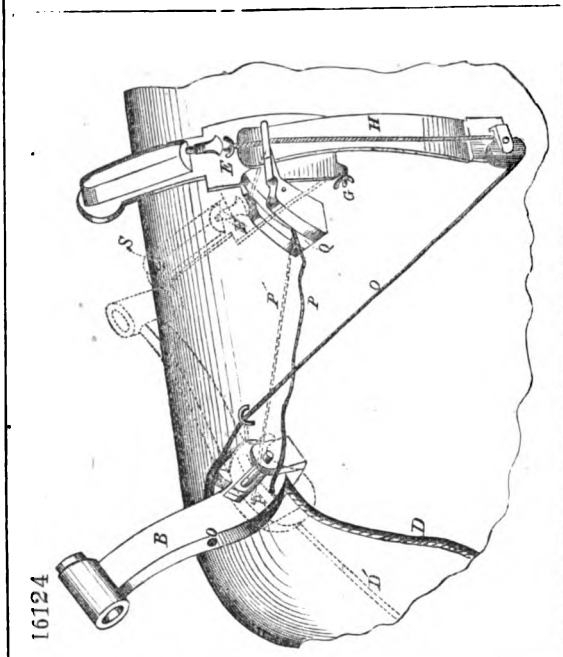
16124

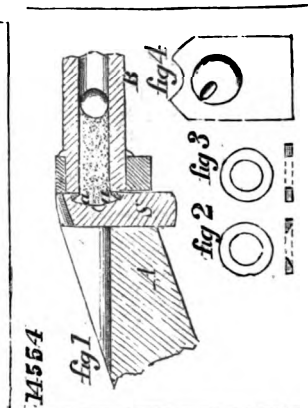
14564
fig 1
fig 2
fig 3
fig 4

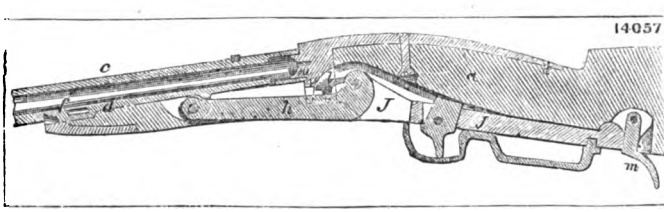
14057

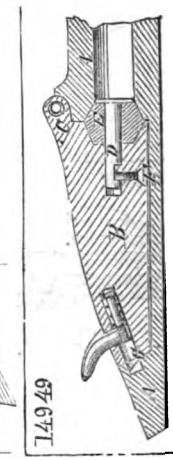
14649

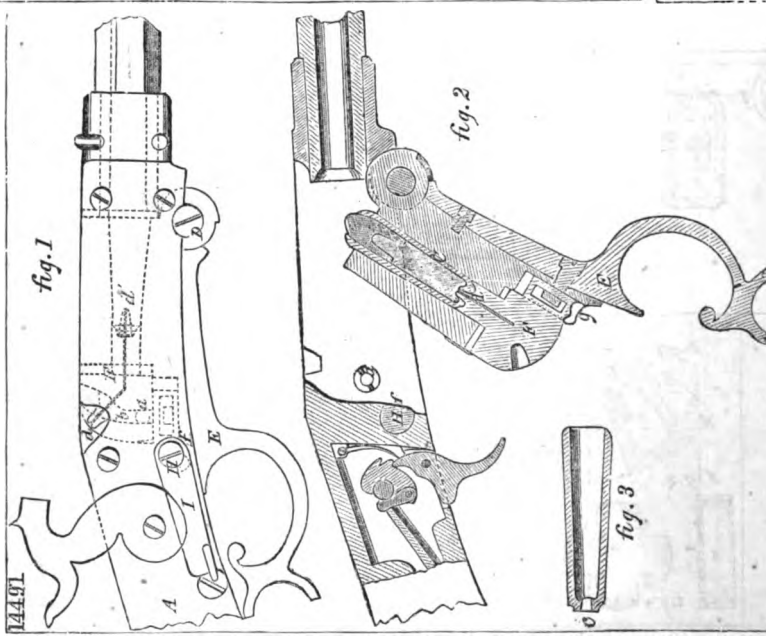
14491
fig. 1
fig. 2
fig. 3

15072

fig 1

fig 2

fig 3

14780

fig.1

fig.2

fig.3

fig 4

fig.5

14147.

fig.1

fig.2.

fig.3

fig. 4

15496

Digitized by Google

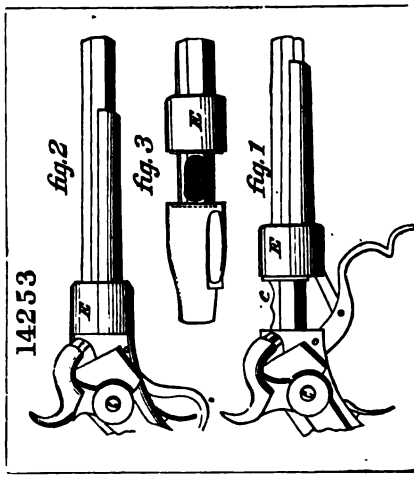

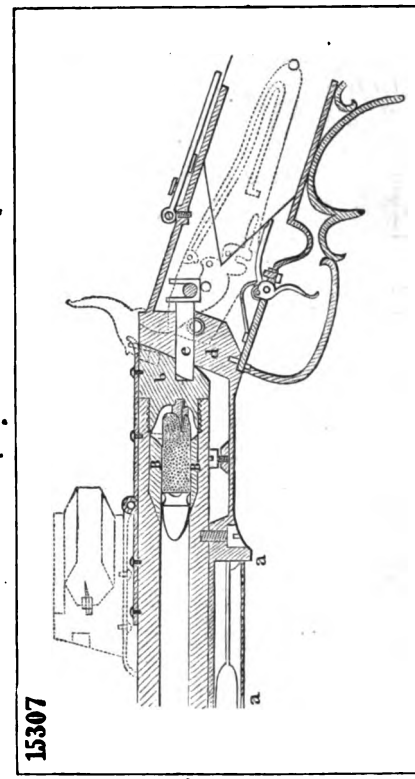

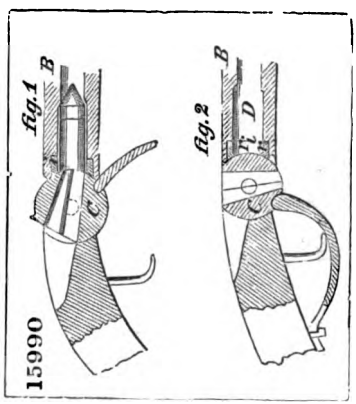

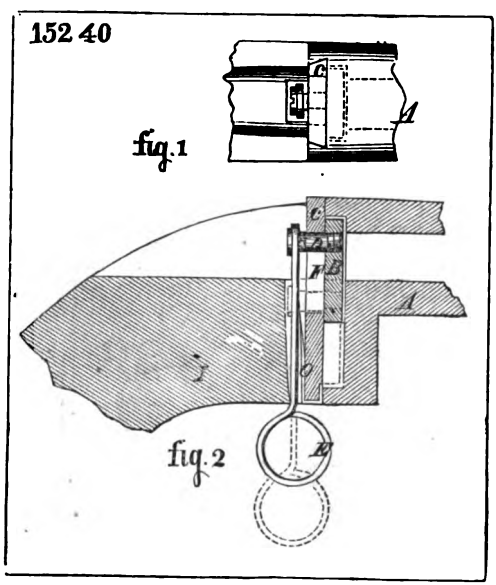

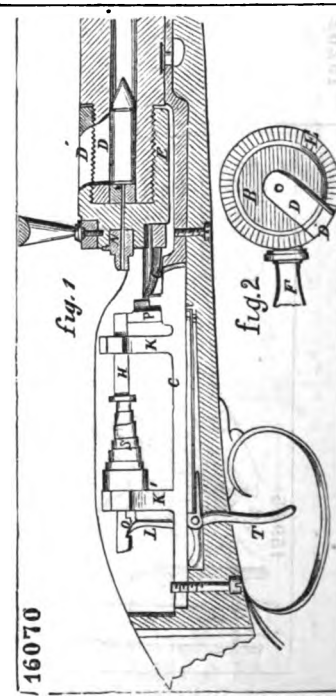

Digitized by Google

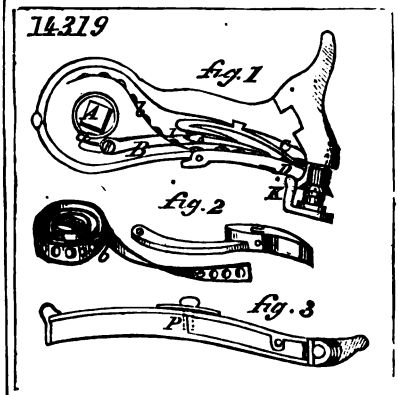

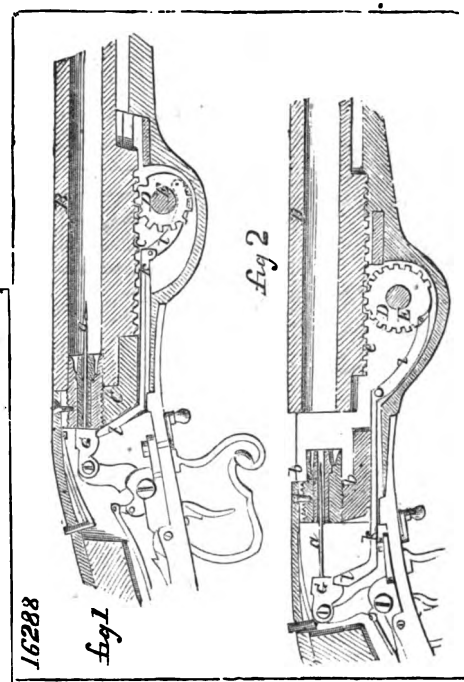

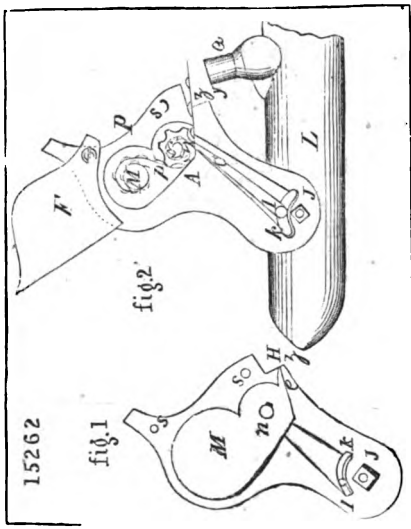

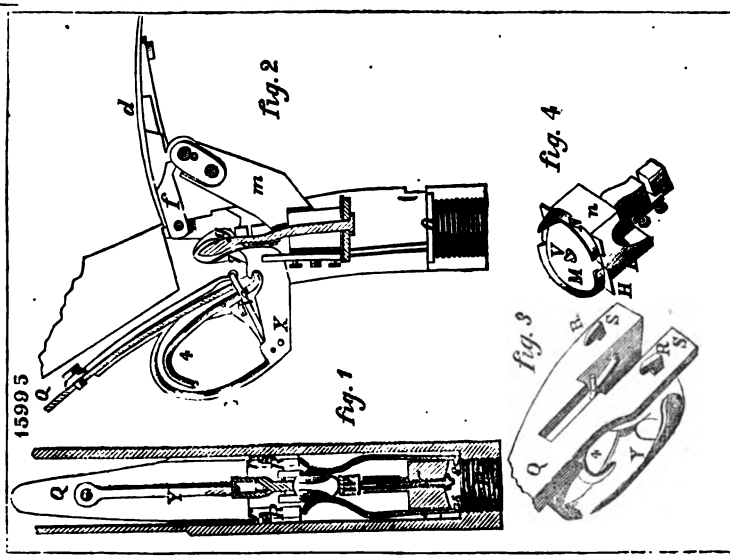

Digitized by Google

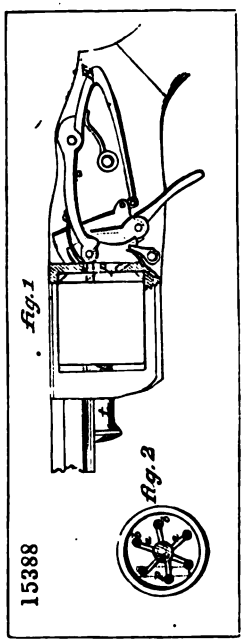

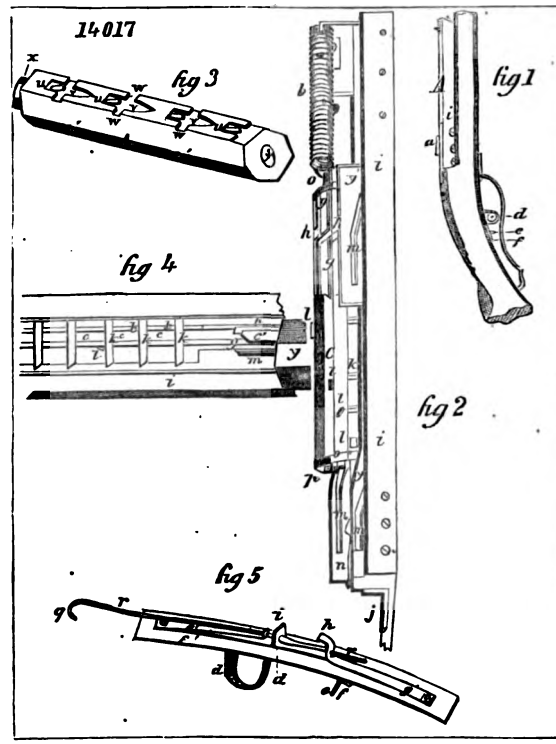

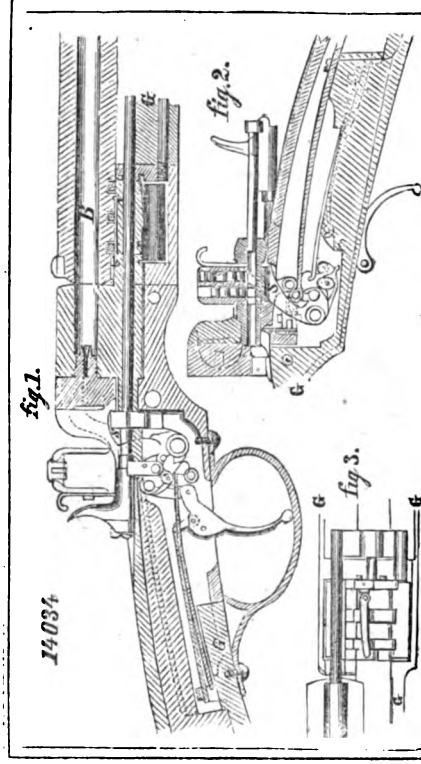

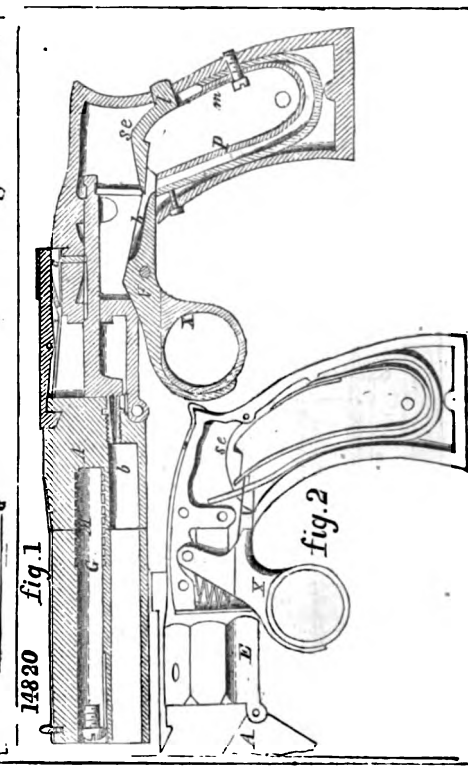

Digitized by Google

14710

fig.1

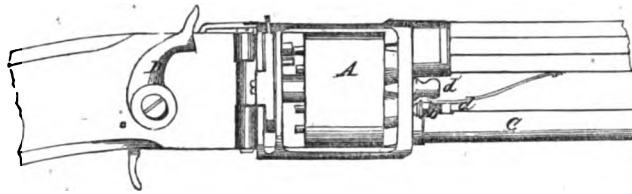

fig.2

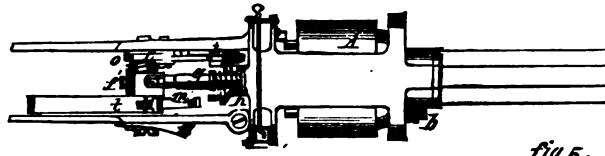

fig.3

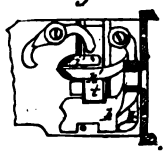

fig.4

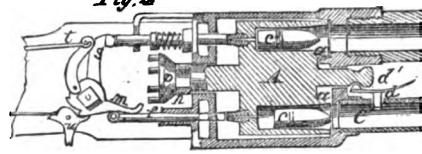

fig.5.

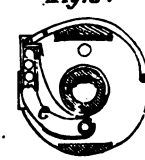

fig.6

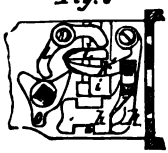

fig.7

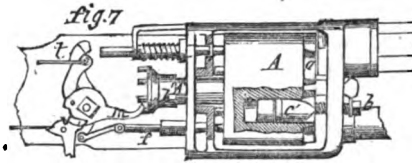

fig.8

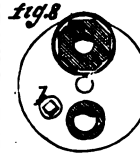

14420

fig 1

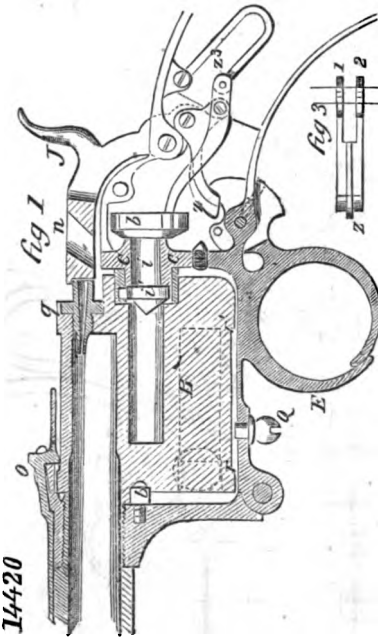

fig 3

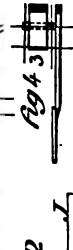

fig 4

fig 5

fig 2

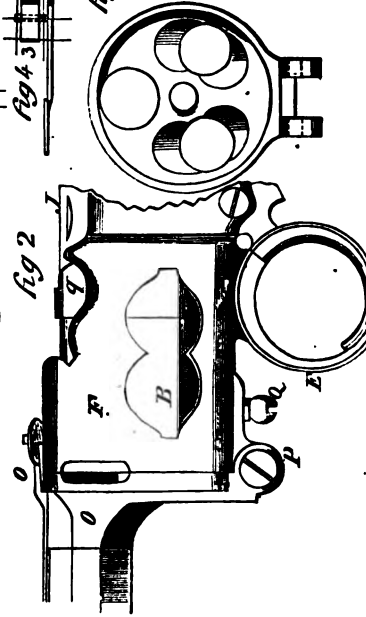

Digitized by Google

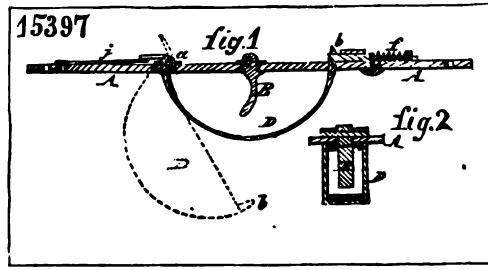

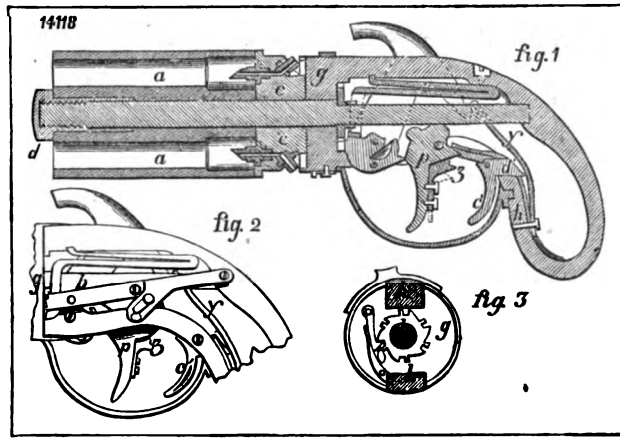

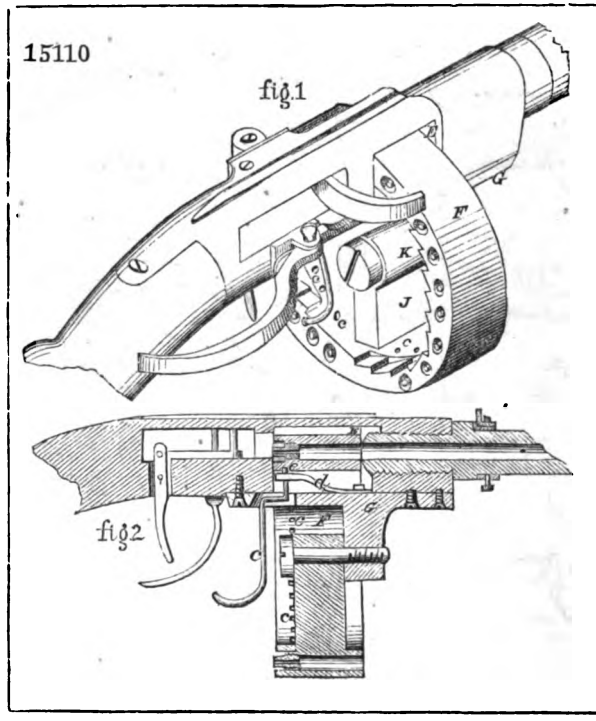

Digitized by Google

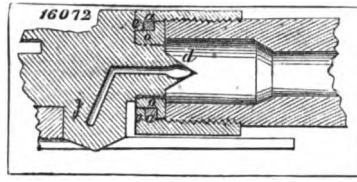

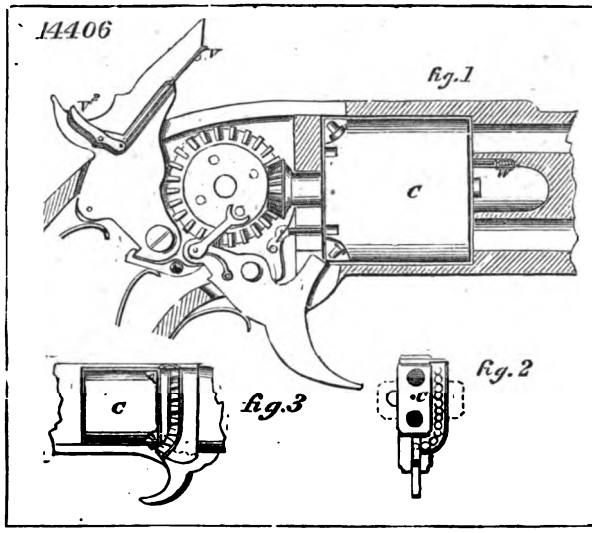

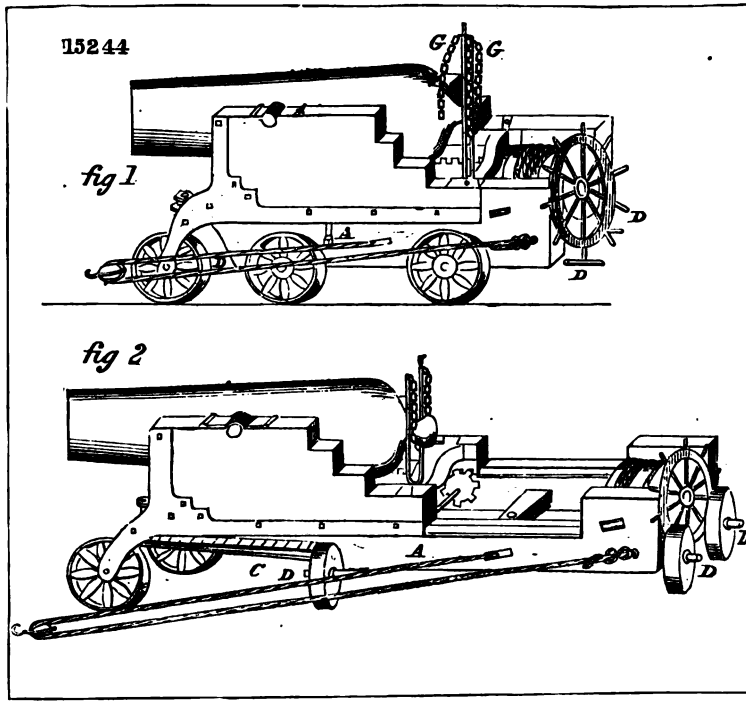

Digitized by Google

14597

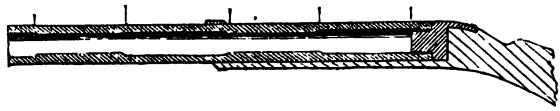

14488

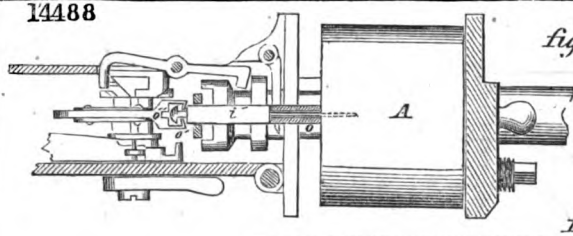

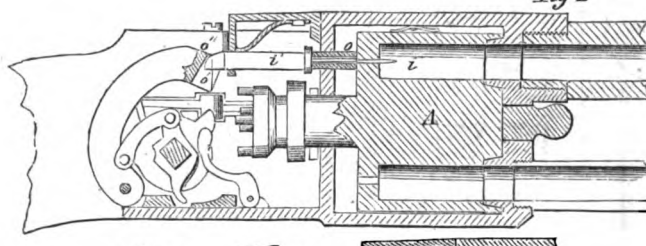

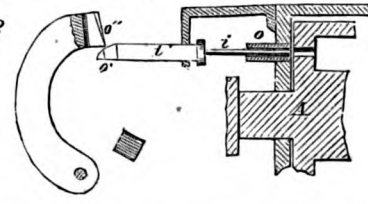

14819

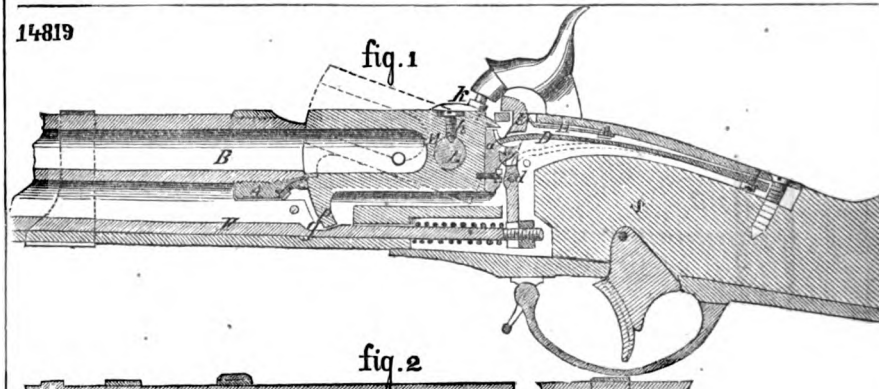

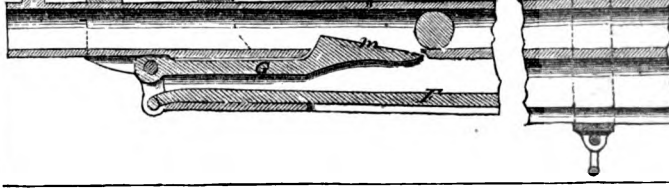

Digitized by Google

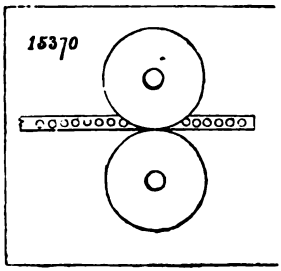

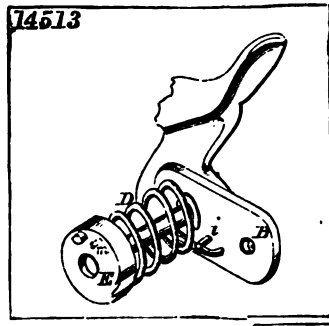

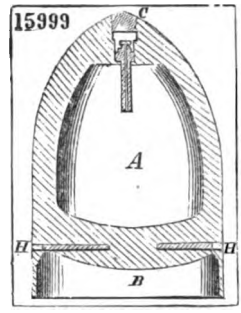

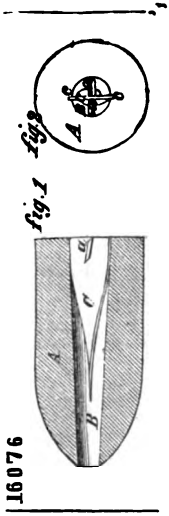

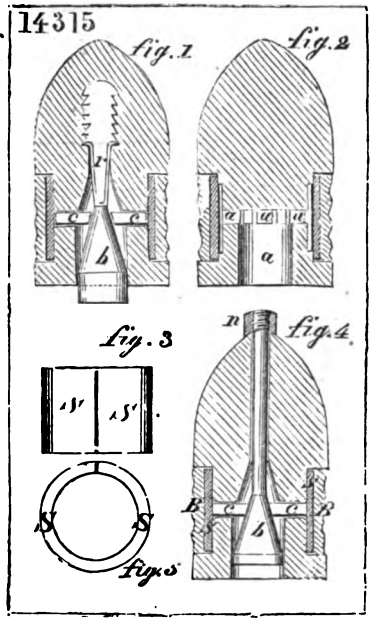

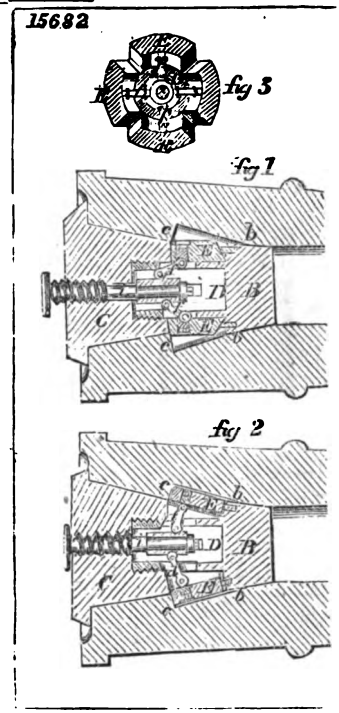

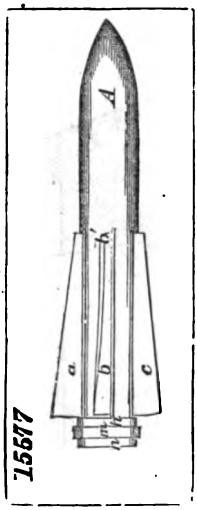

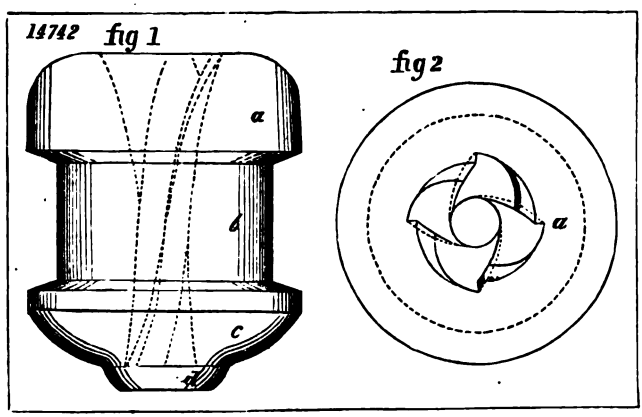

Digitized by Google

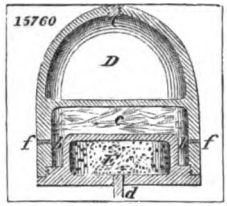

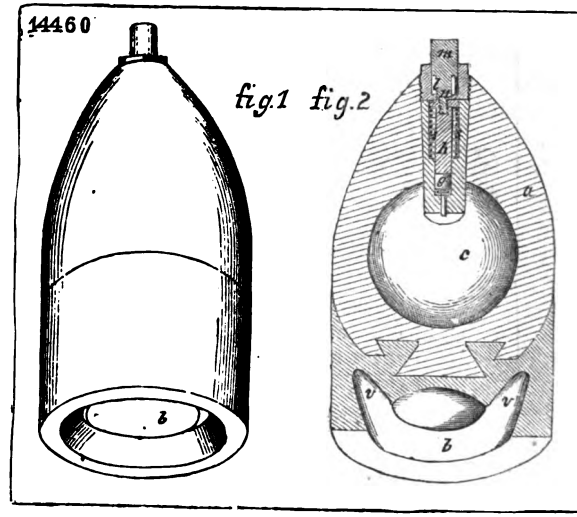

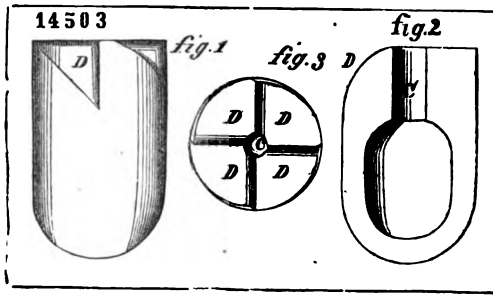

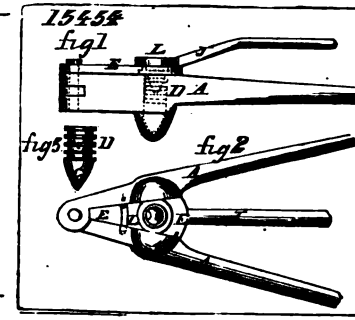

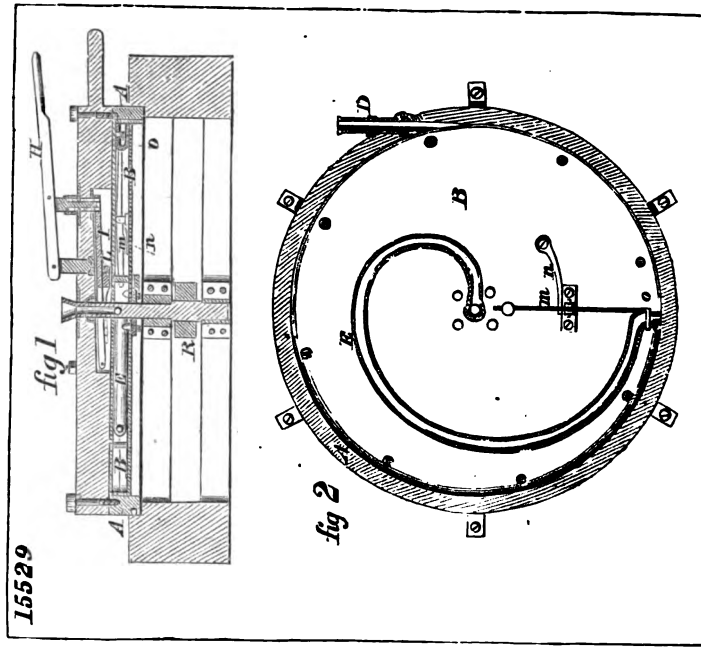

Digitized by Google

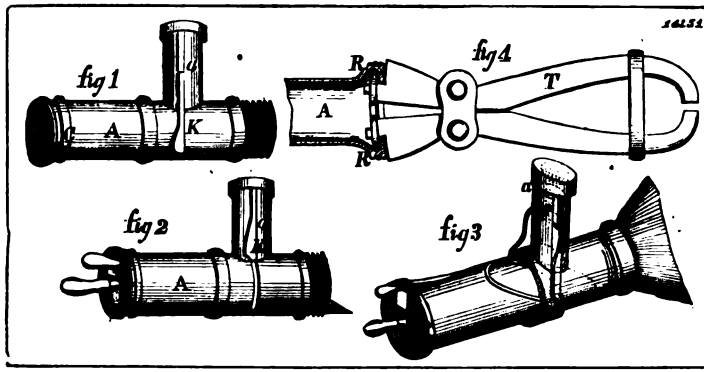

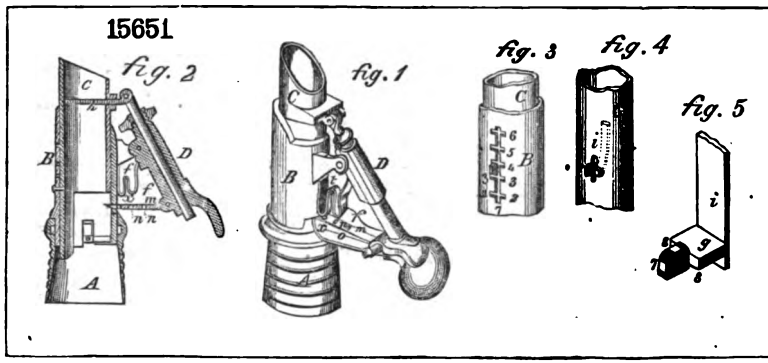

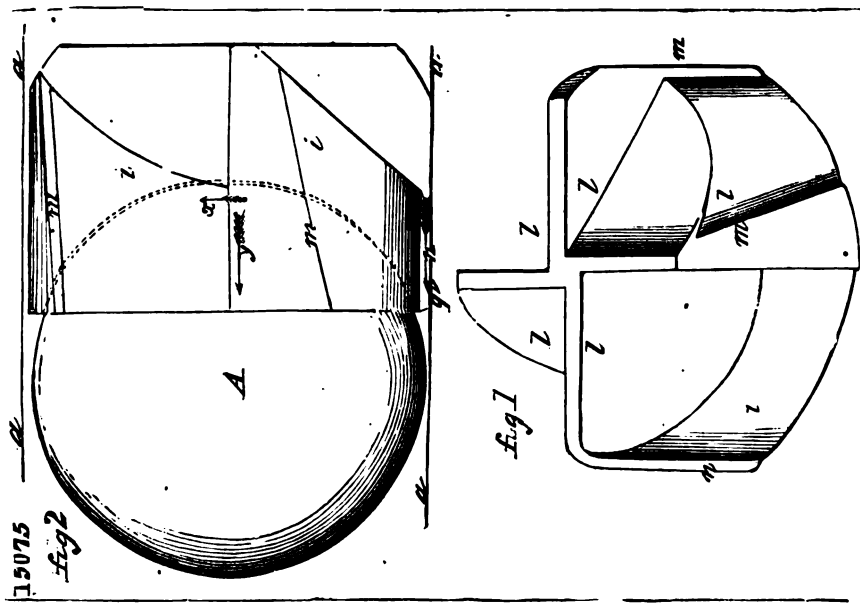

Digitized by Google

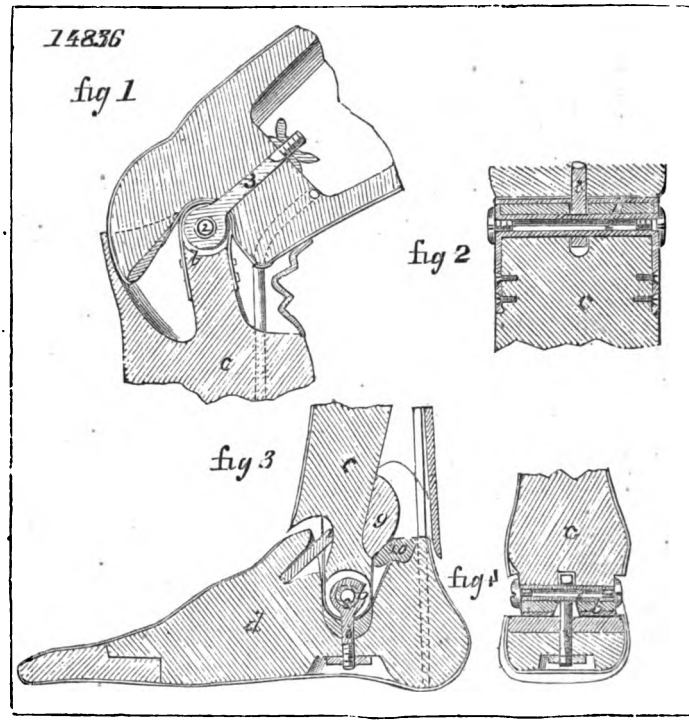

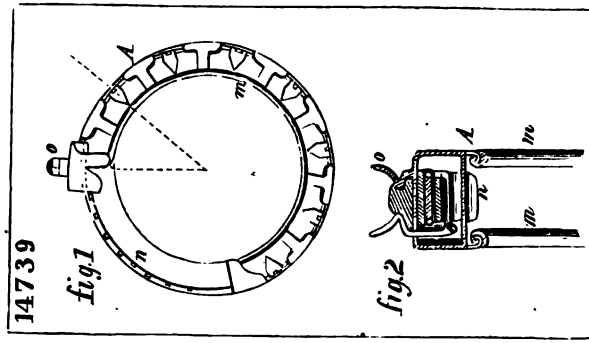

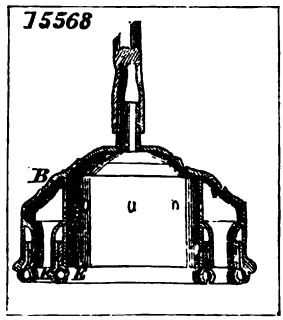

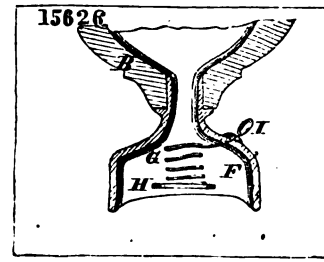

Digitized by Google

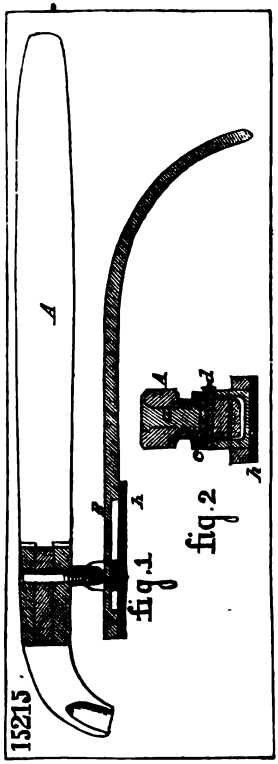

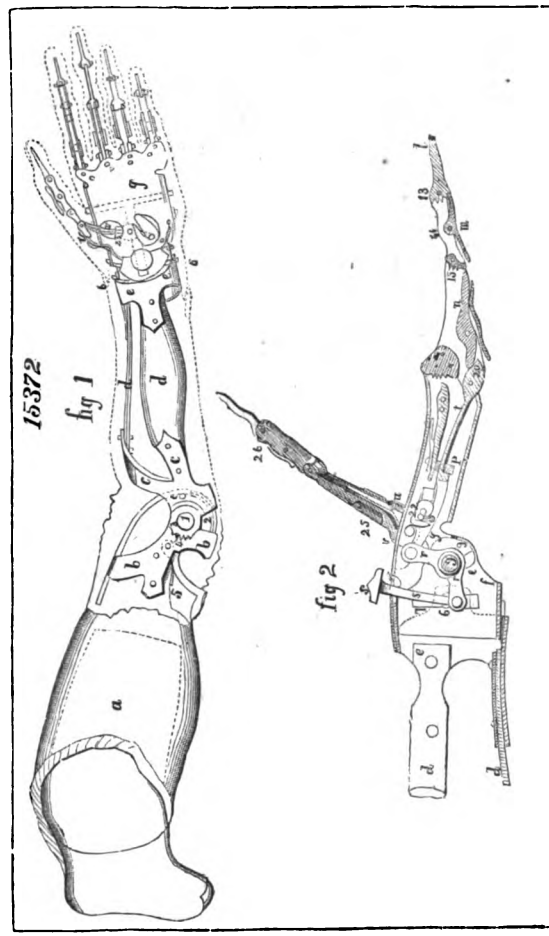

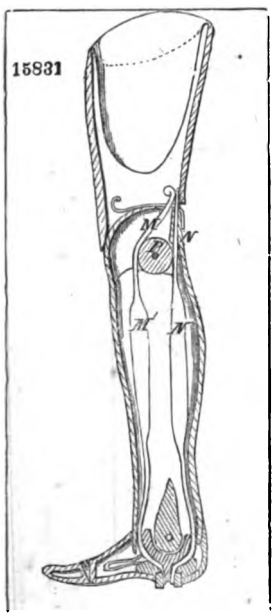

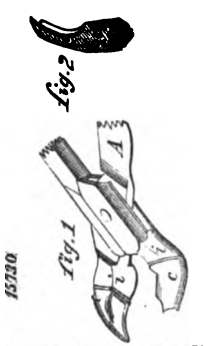

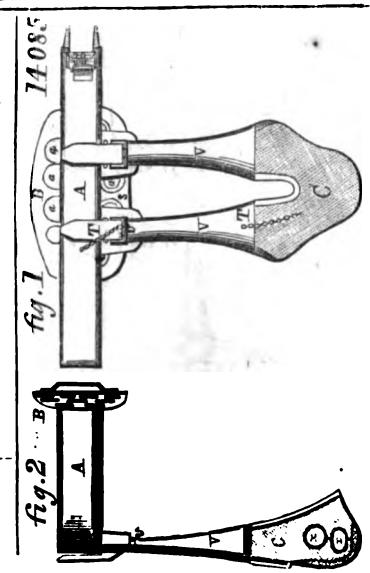

Digitized by Google

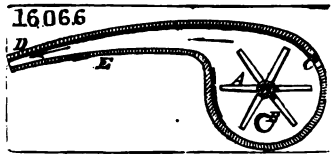

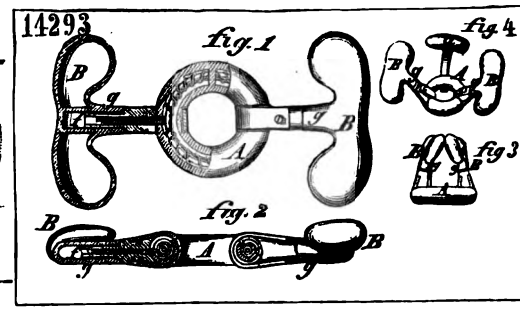

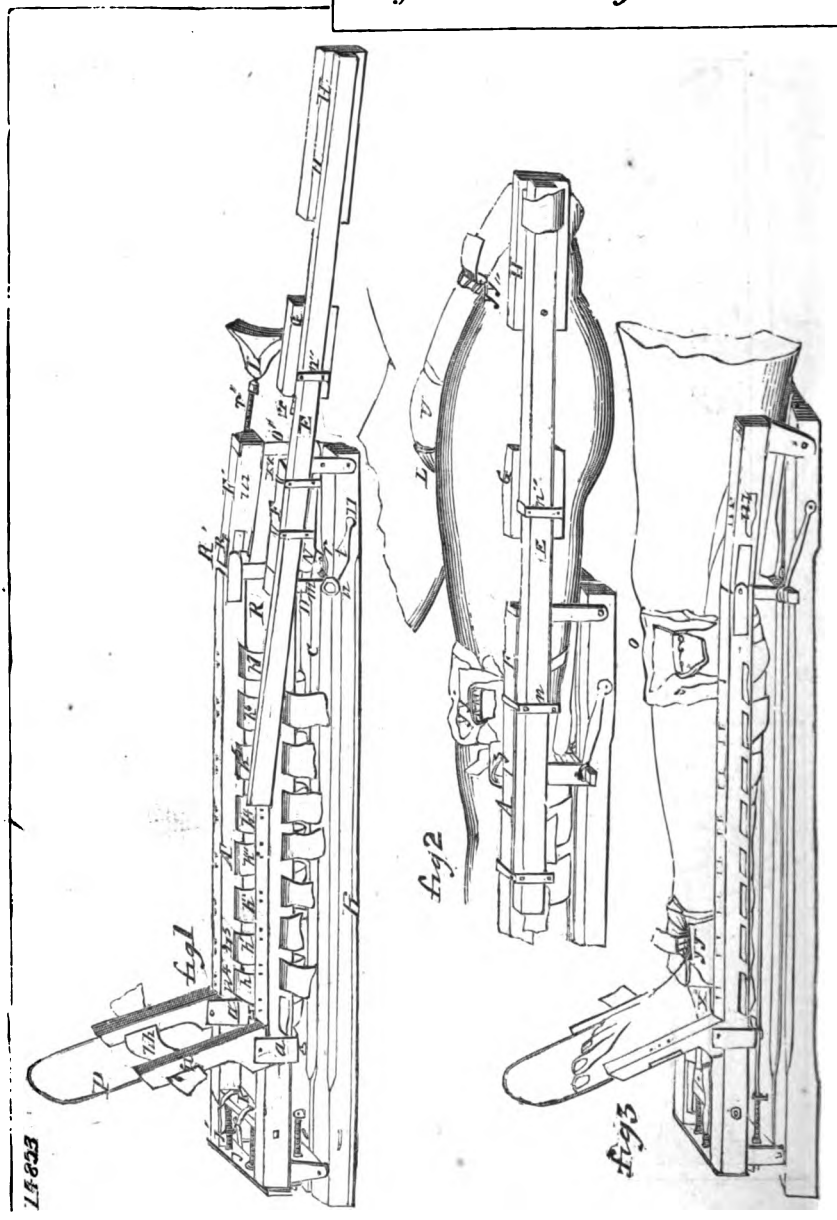

Digitized by Google

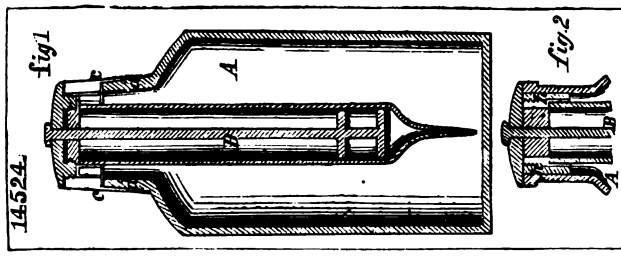

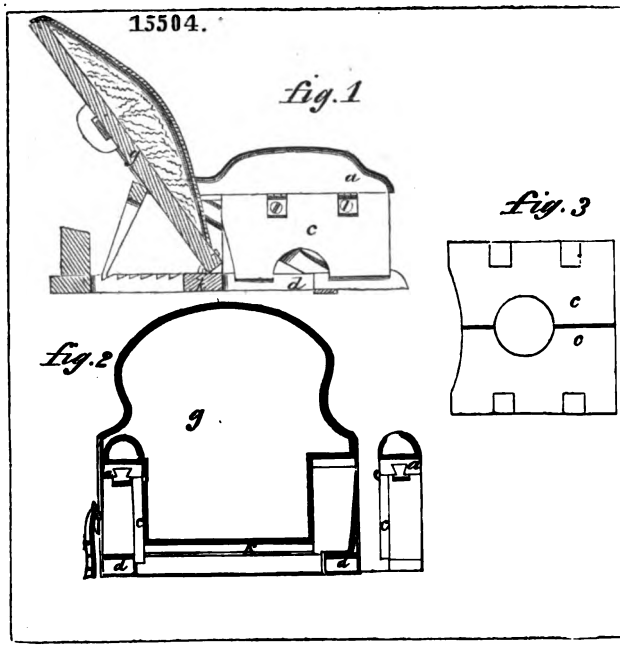

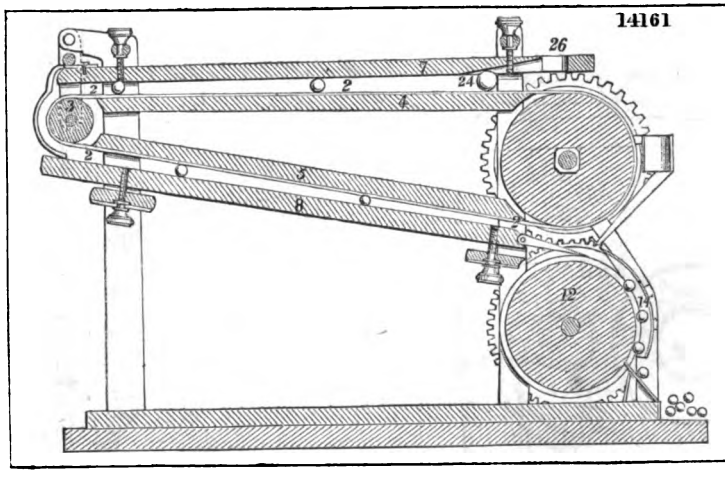

Digitized by Google

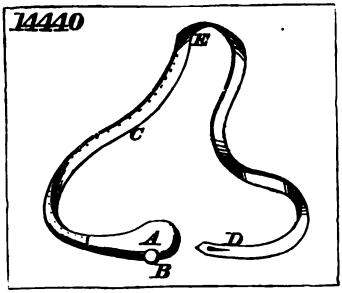

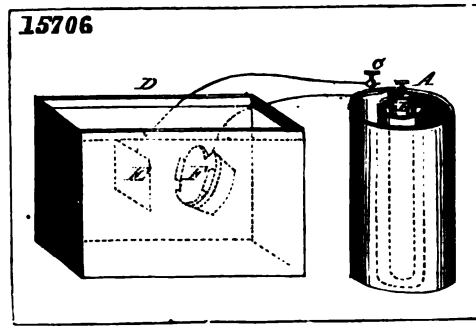

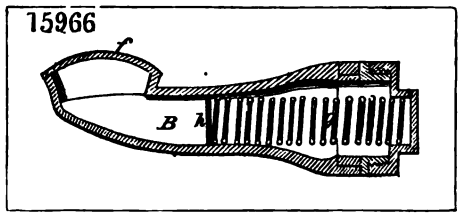

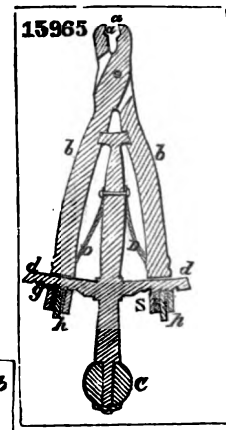

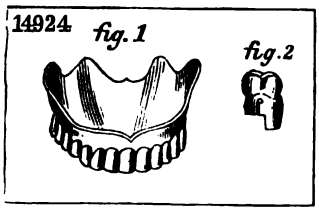

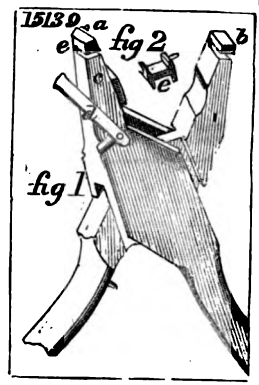

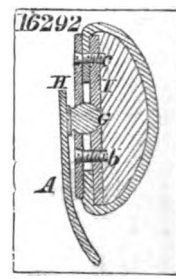

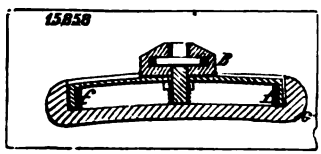

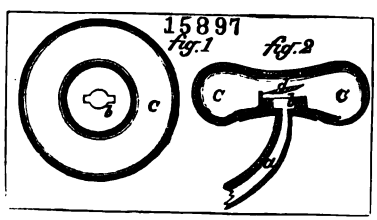

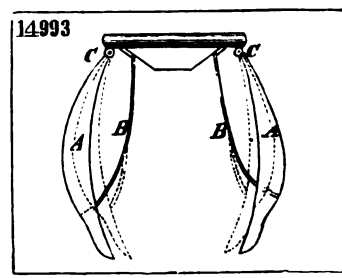

Digitized by Google

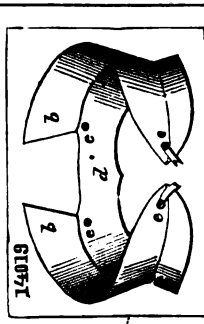

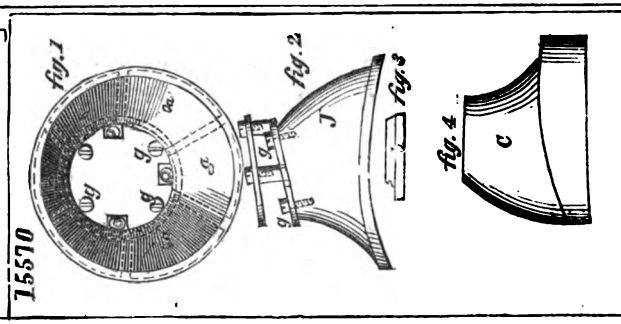

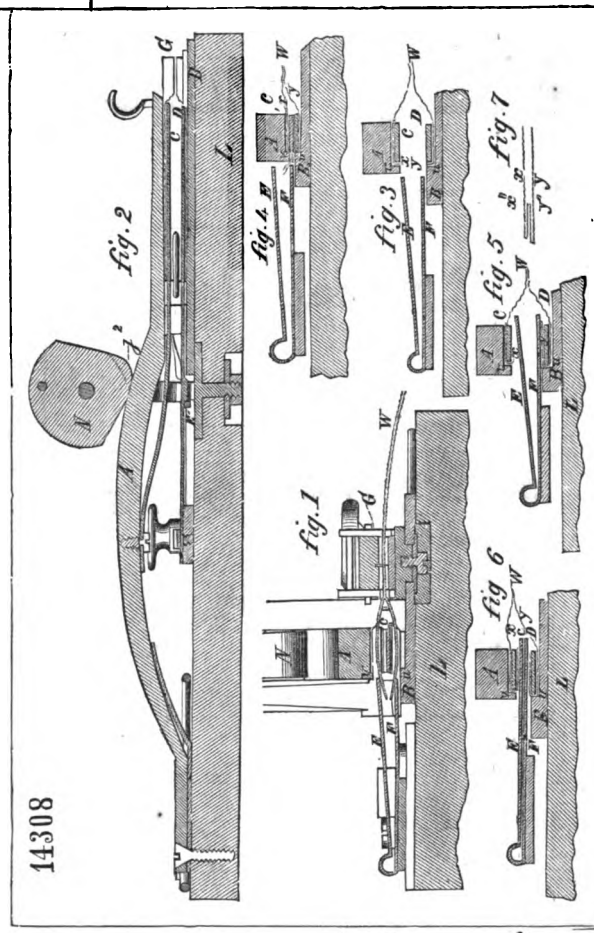

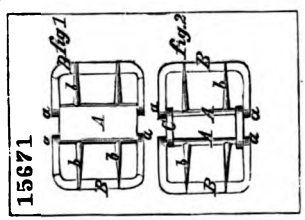

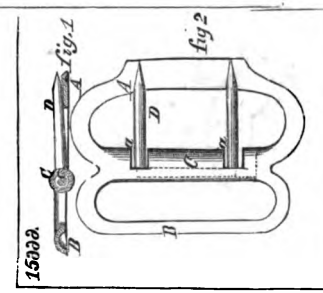

Digitized by Google

15634

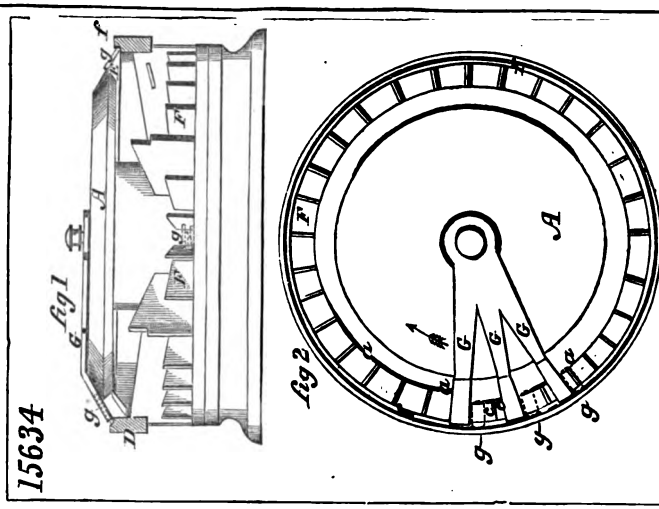

16289

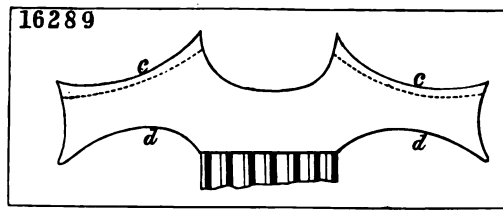

16050

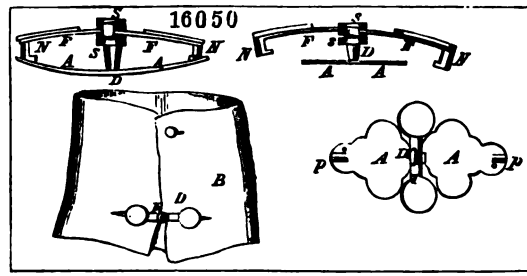

14756

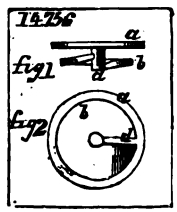

15824

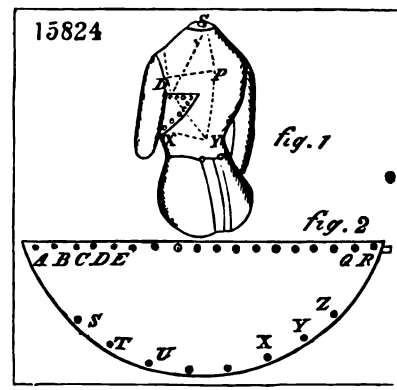

Digitized by Google

16106

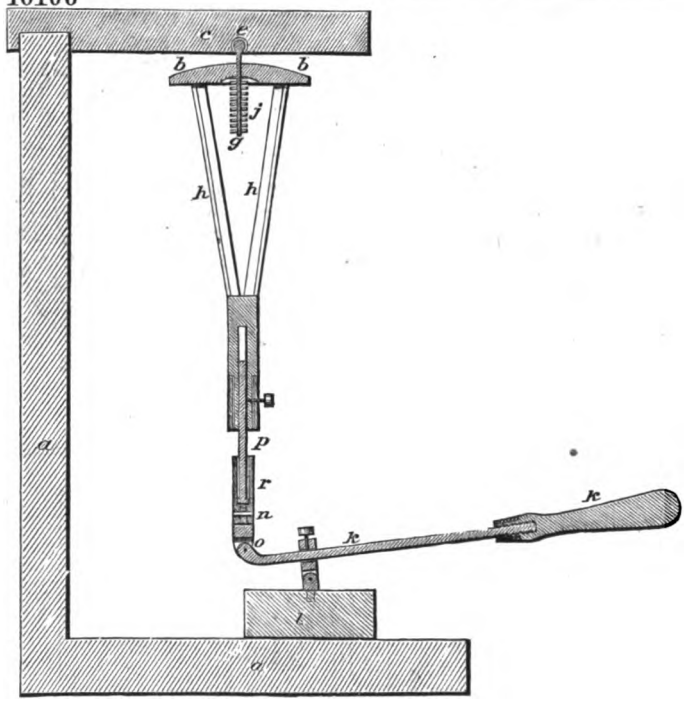

16140

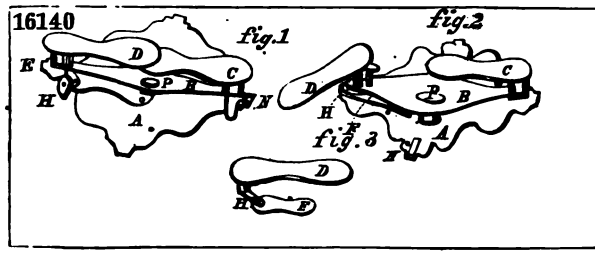

16063

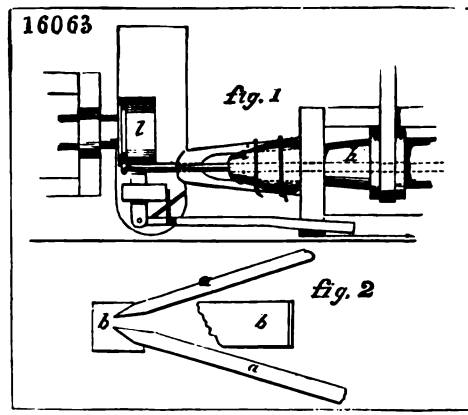

Digitized by Google

16116

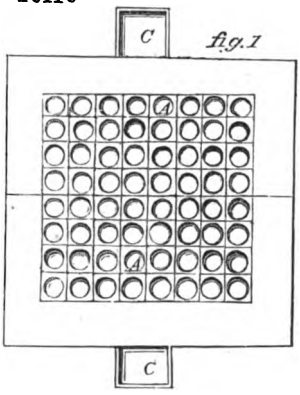

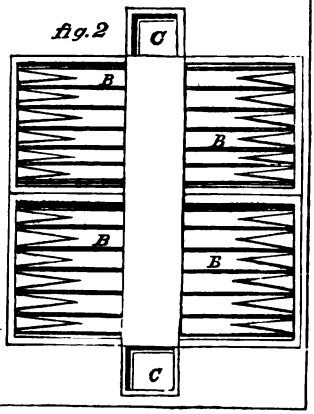

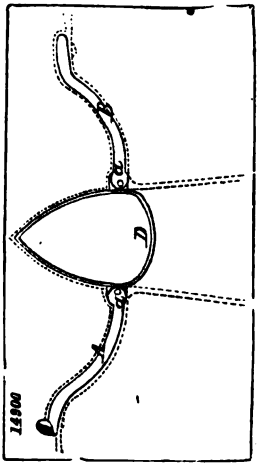

14719

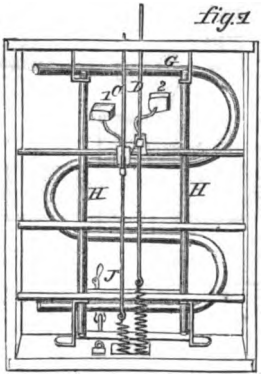

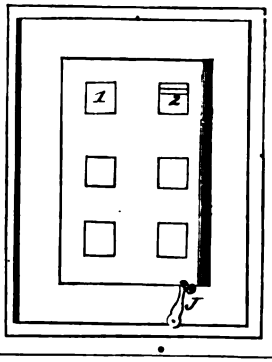

14964

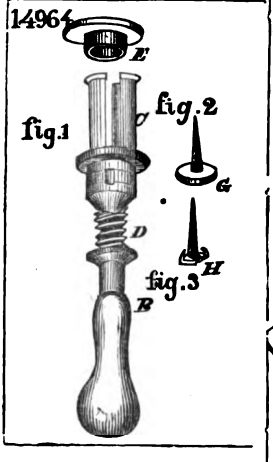

15042

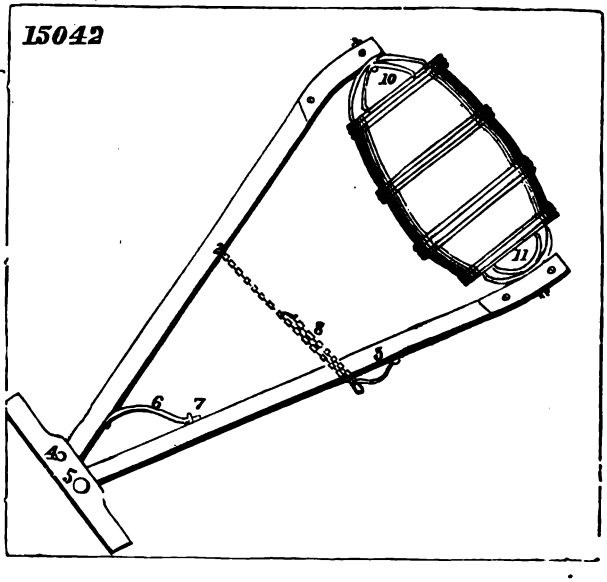

Digitized by Google

14446

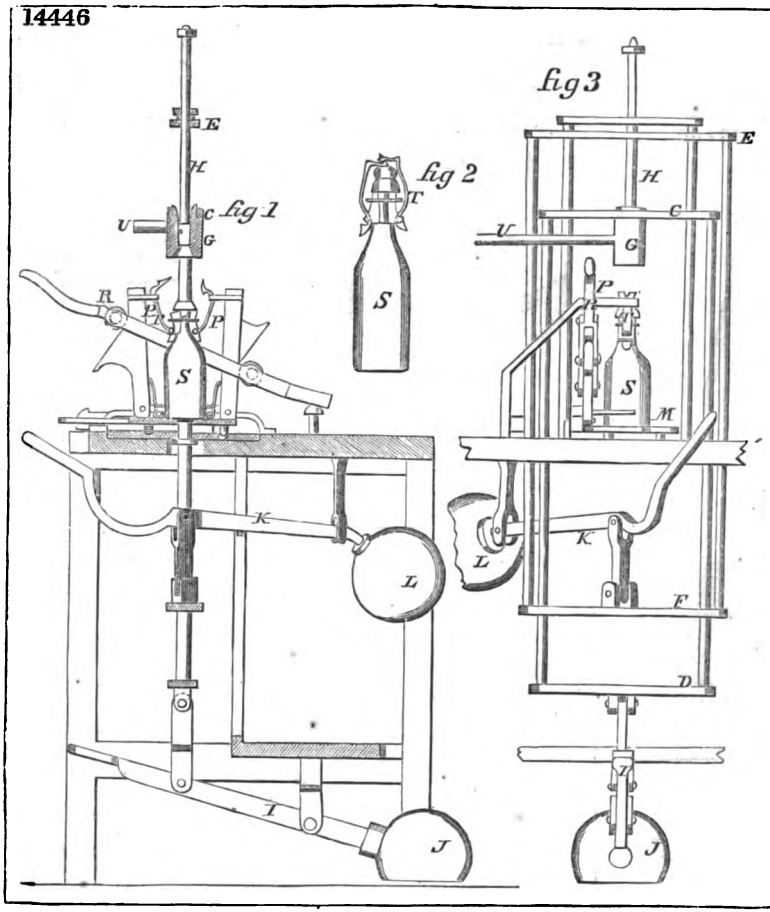

15788

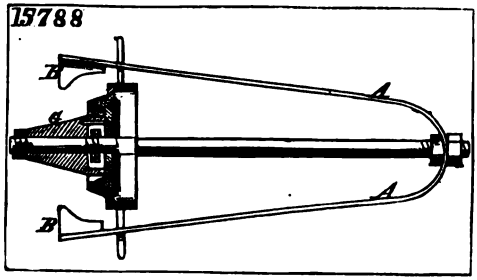

15098

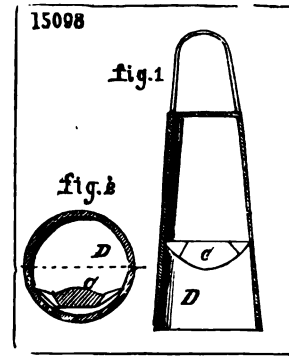

15994

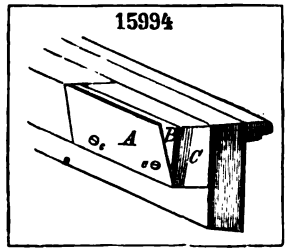

14290

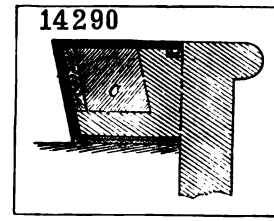

Digitized by Google

16200

16017

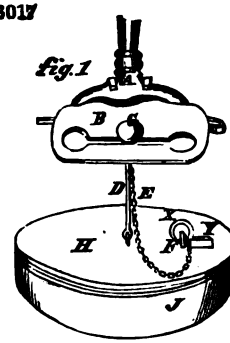

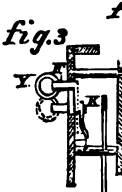

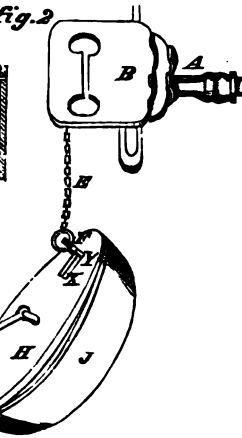

15802

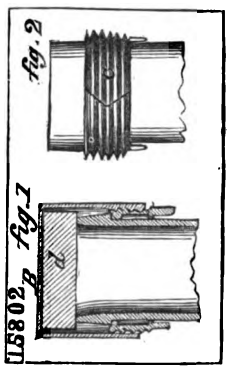

14783

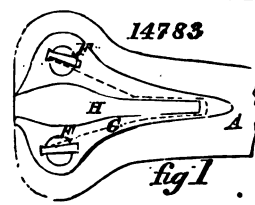

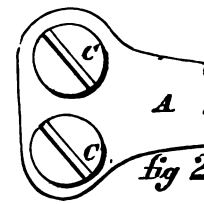

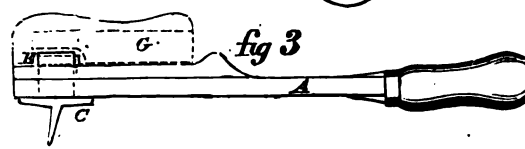

15514

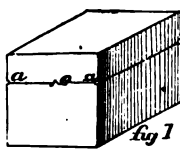

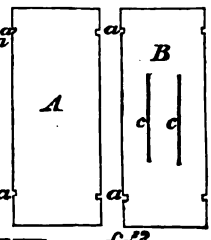

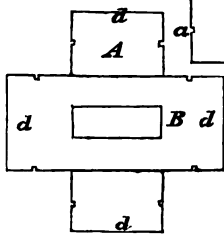

14255

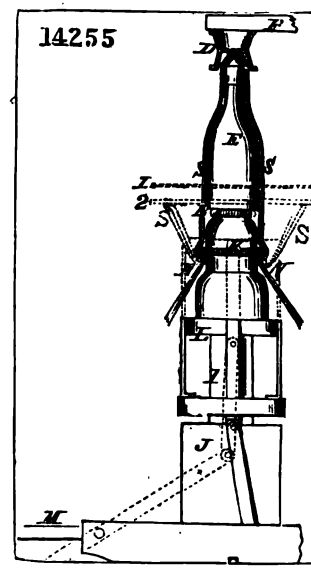

Digitized by Google

16098

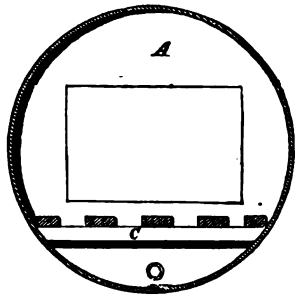

14732

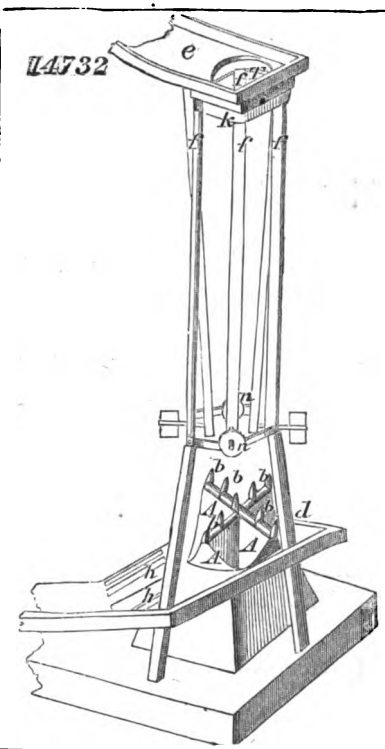

14763

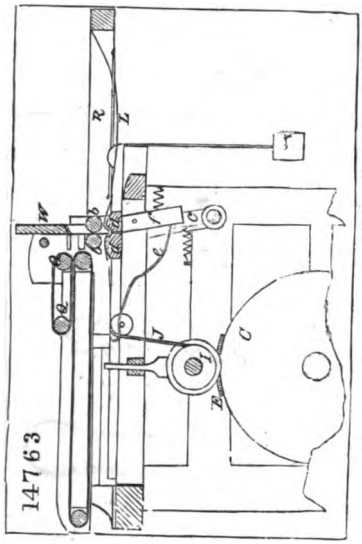

15294

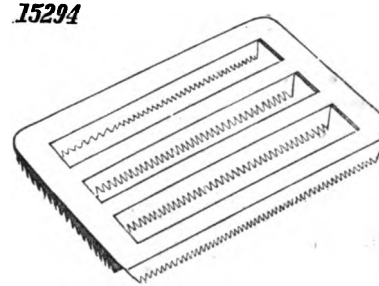

14527

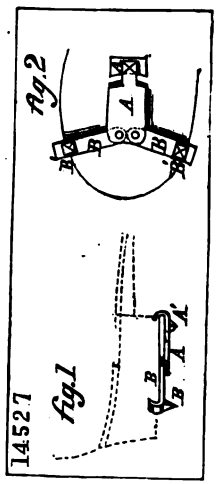

15440

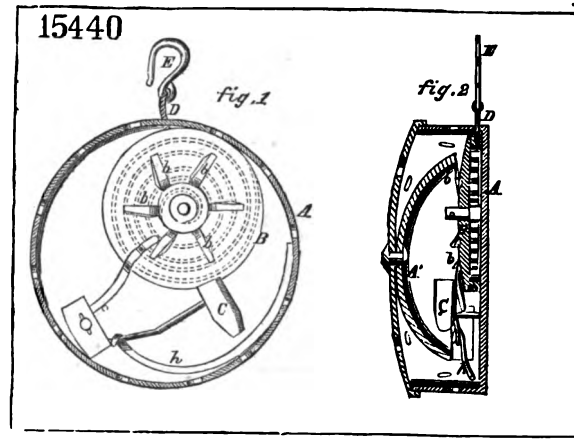

Digitized by Google

16014

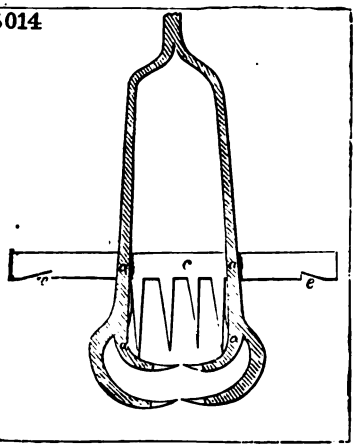

14587

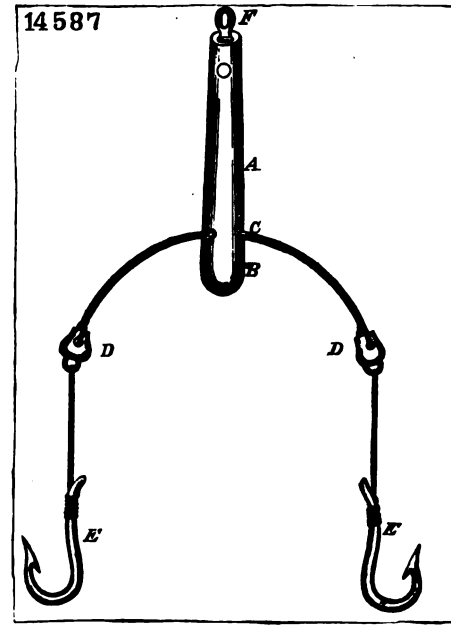

15466

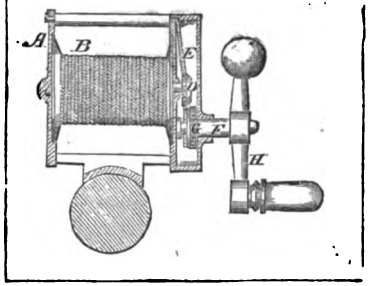

15279

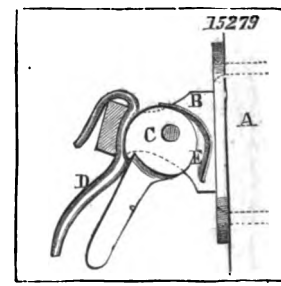

15889

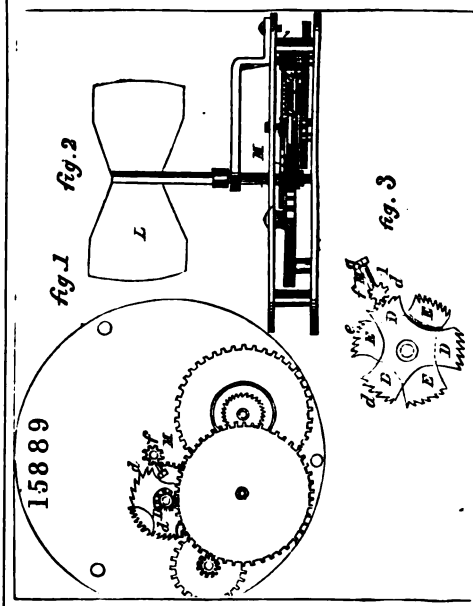

14706

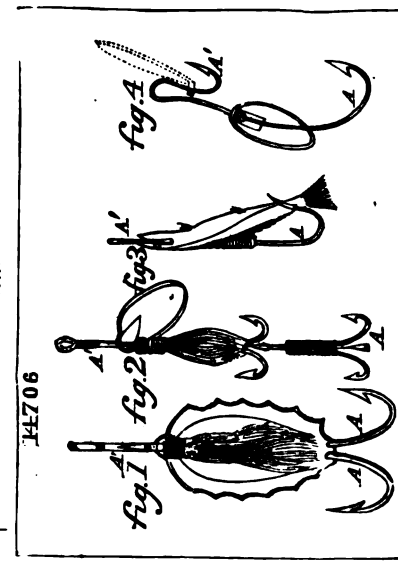

Digitized by Google

15226

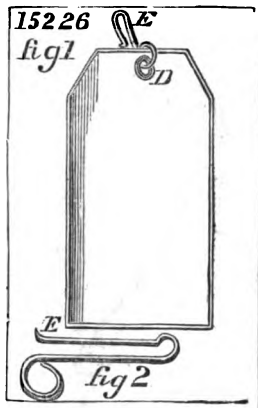

16152

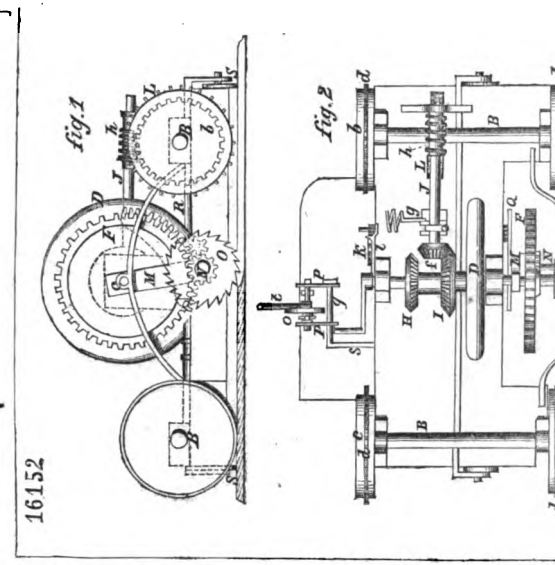

15883

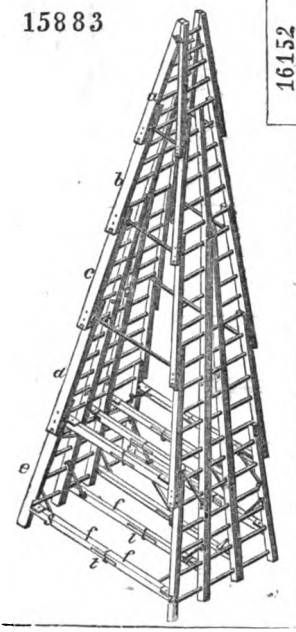

15337.

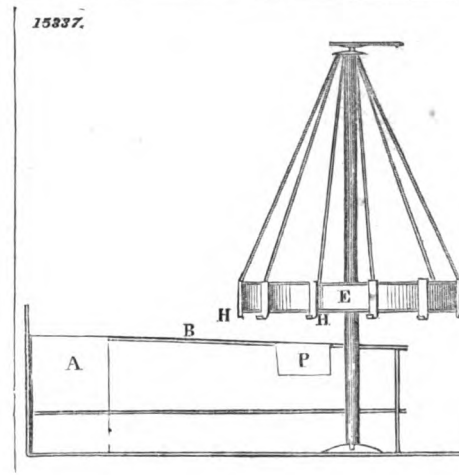

15941

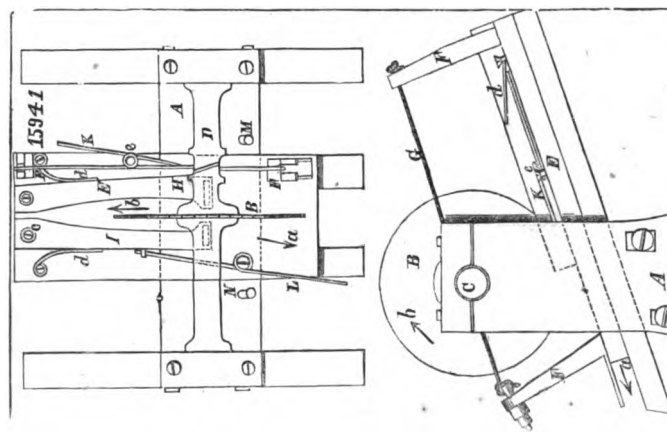

1478

fig 1

fig 3

fig 2

15483

15393

fig. 1

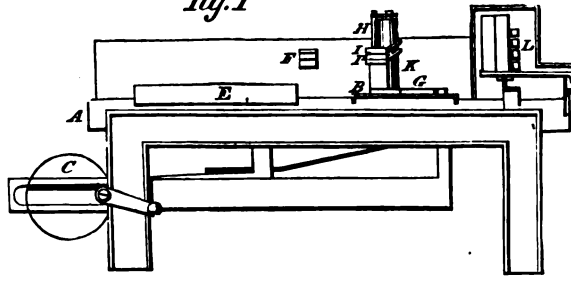

fig. 2

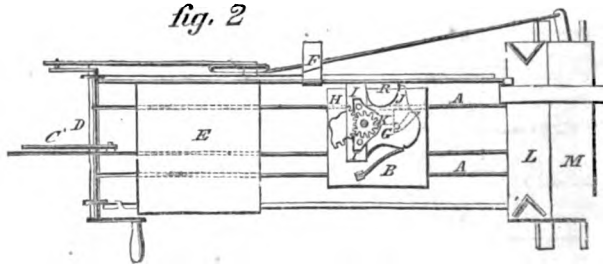

Digitized by Google

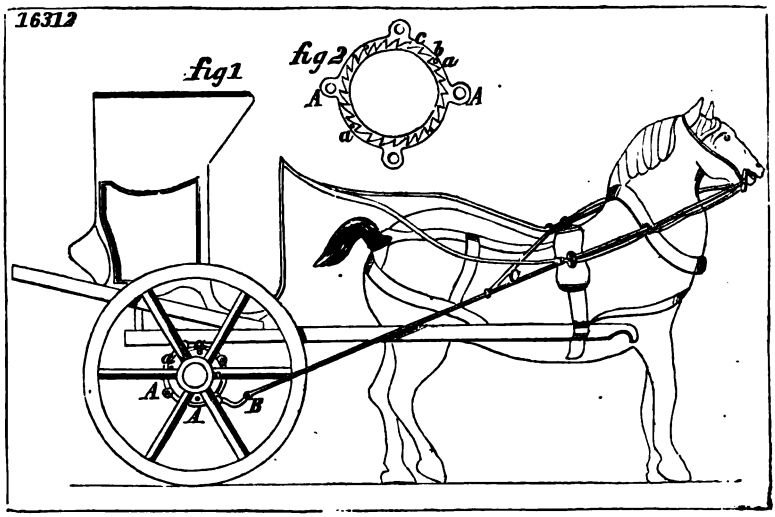

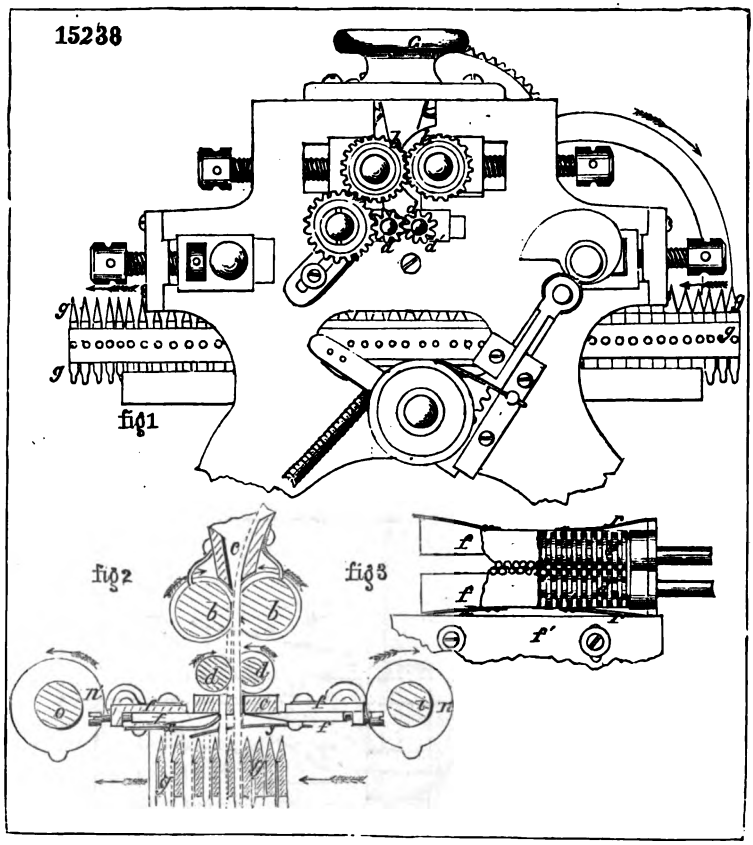

Digitized by Google

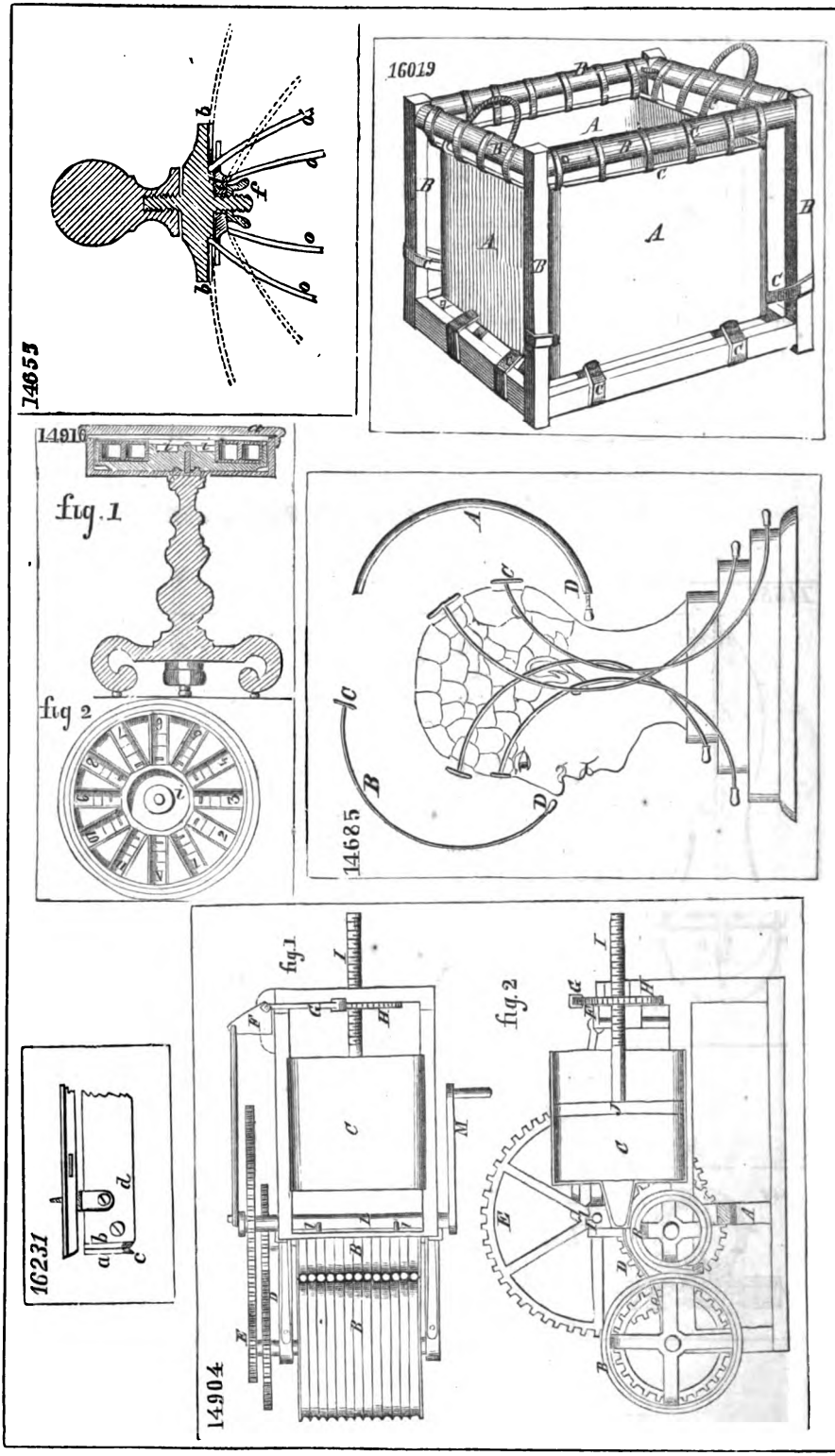

Digitized by Google

14624

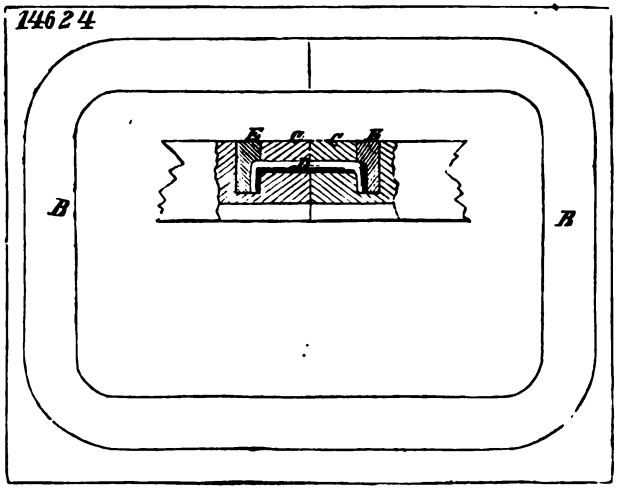

14490

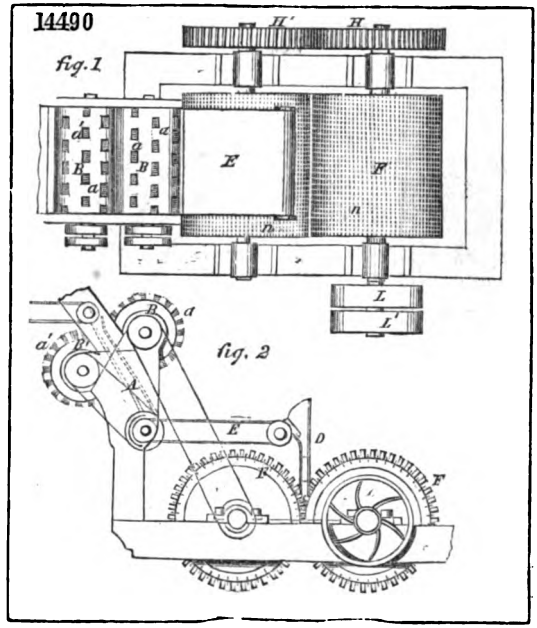

14586

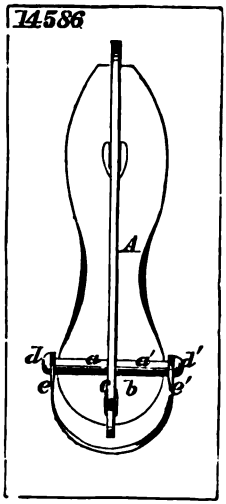

14740

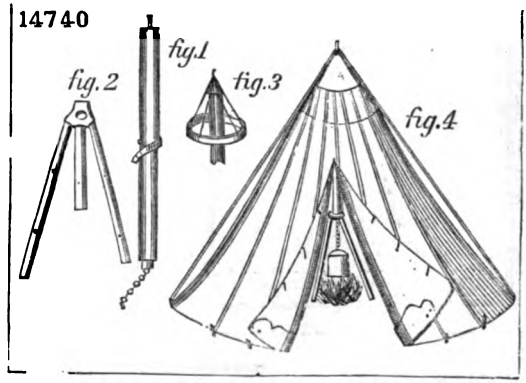

15366

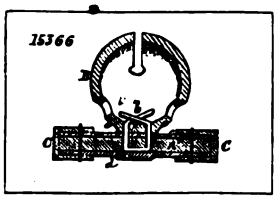

Digitized by Google

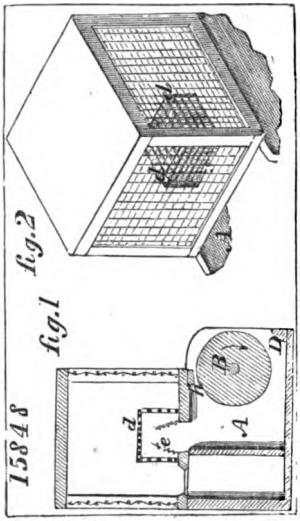

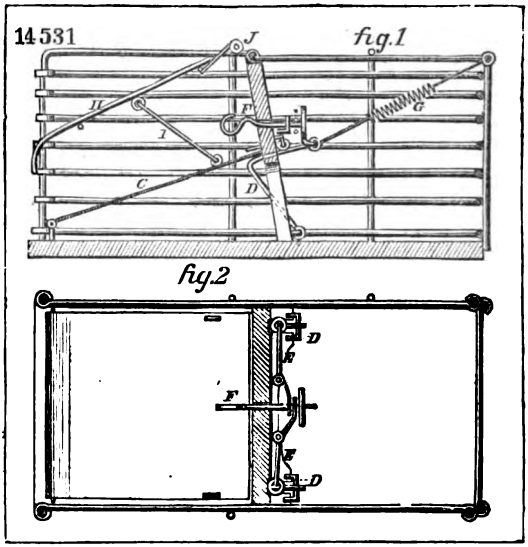

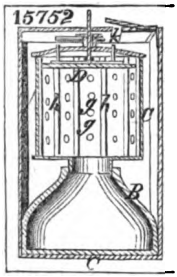

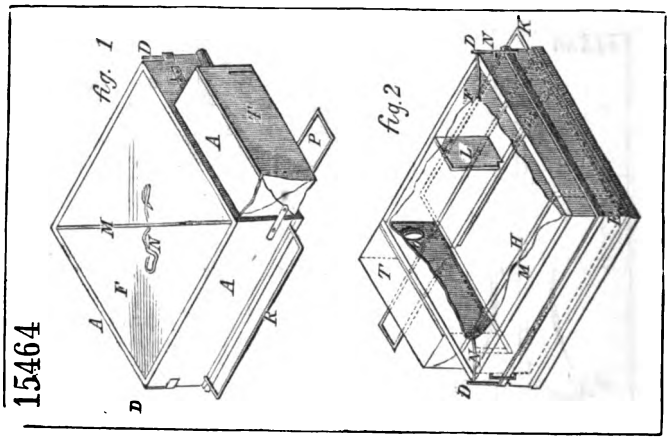

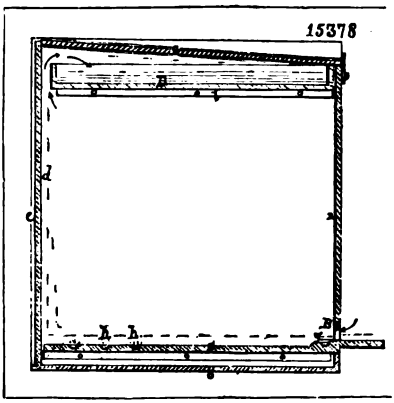

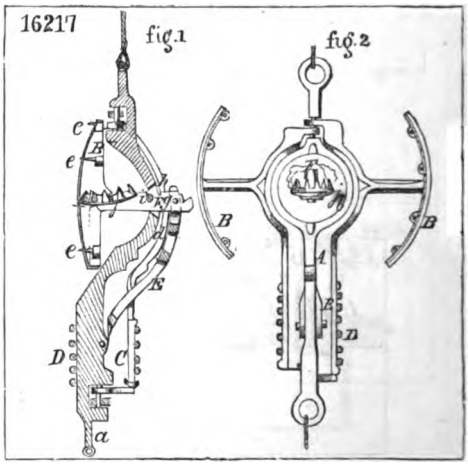

Digitized by Google

14669

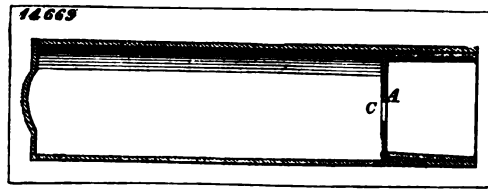

14612

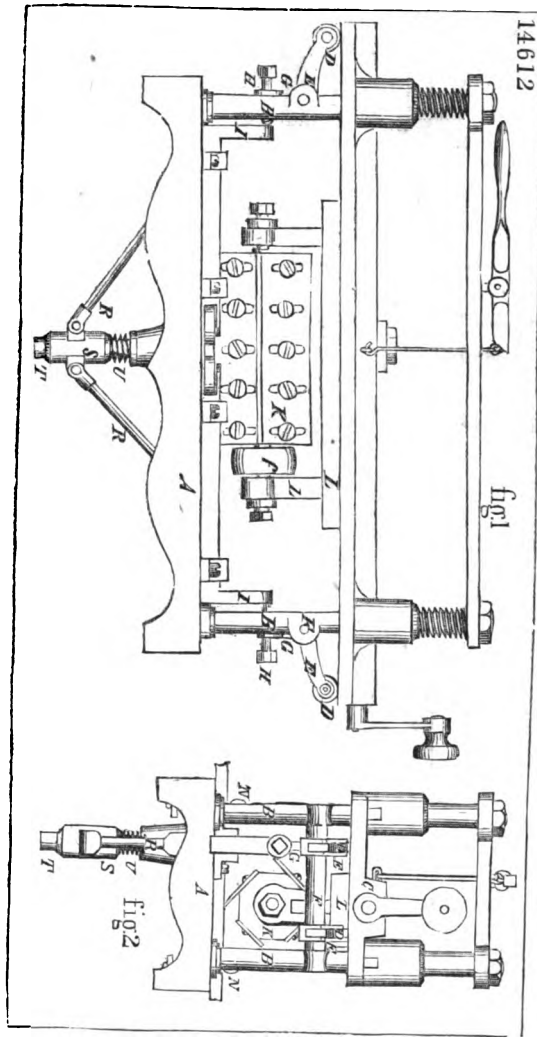

14336

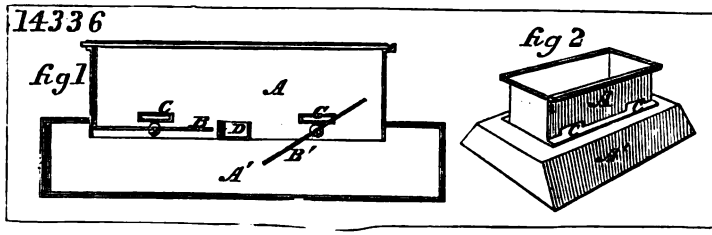

Digitized by Google

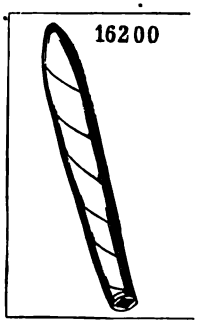

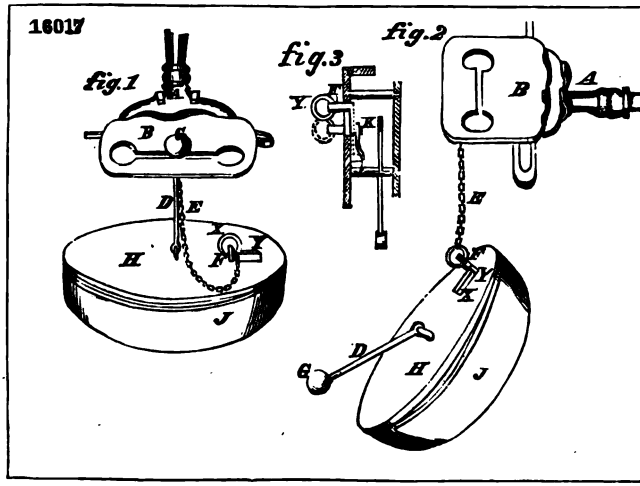

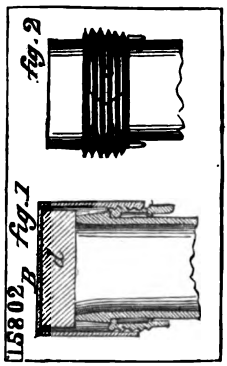

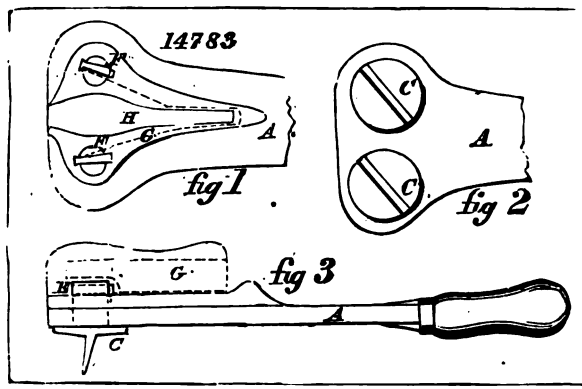

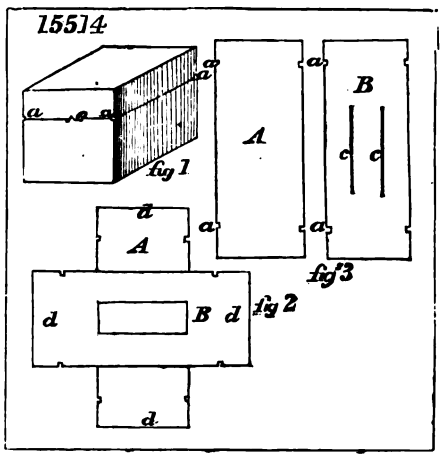

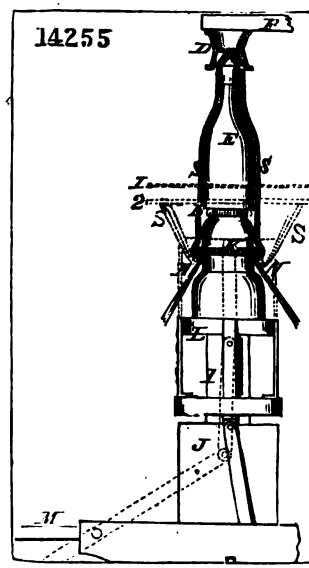

Digitized by Google

16098

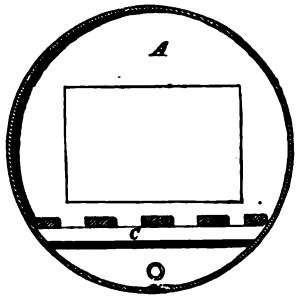

14732

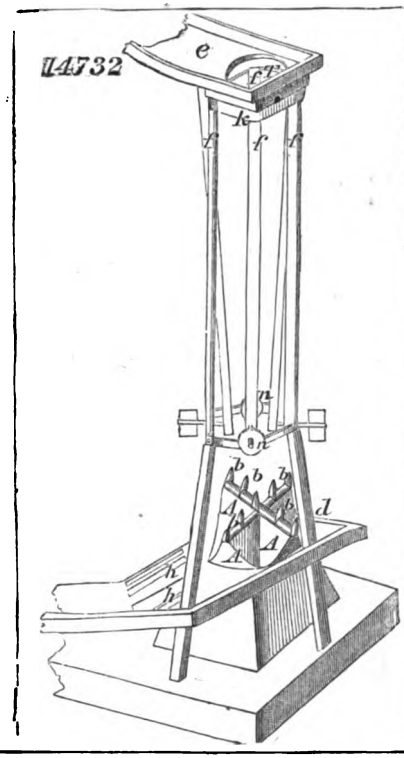

14763

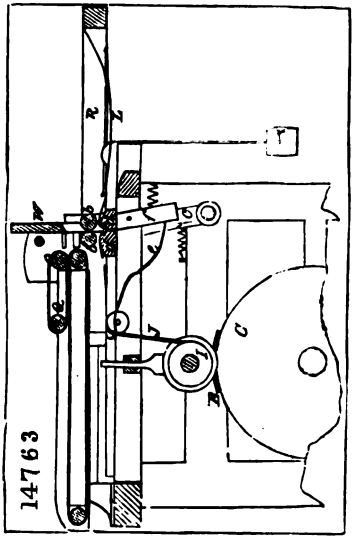

15294

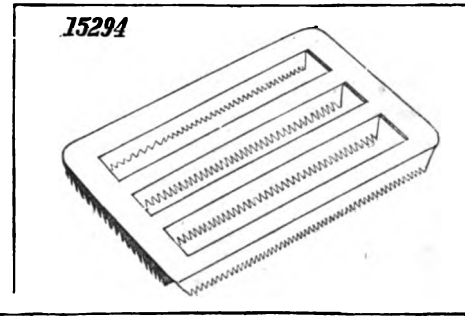

14527

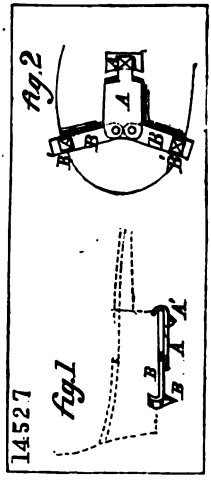

15440

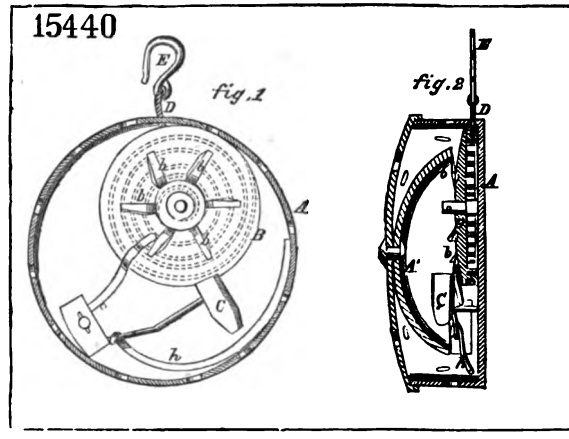

Digitized by Google

16014

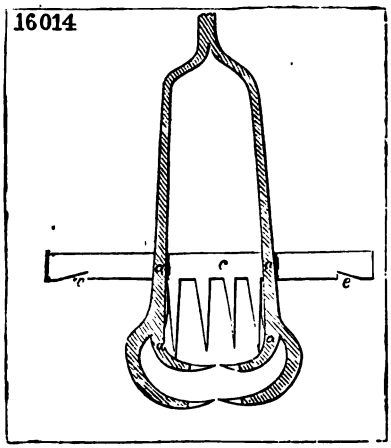

14587

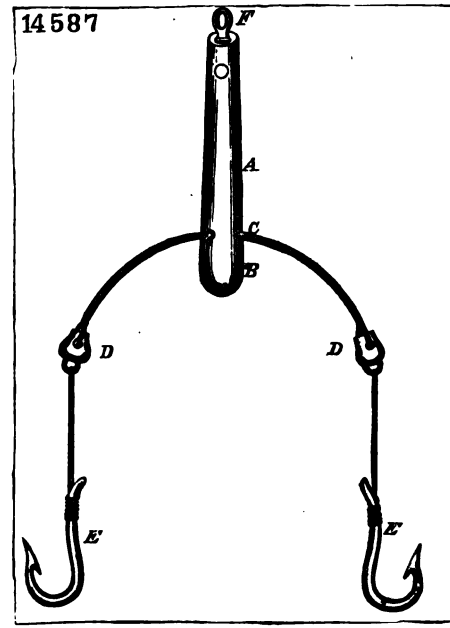

15466

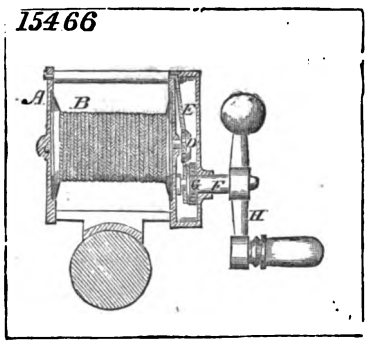

15279

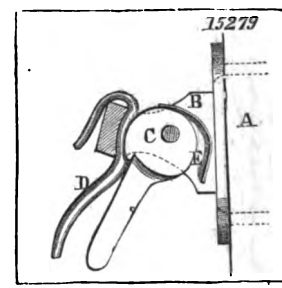

15889

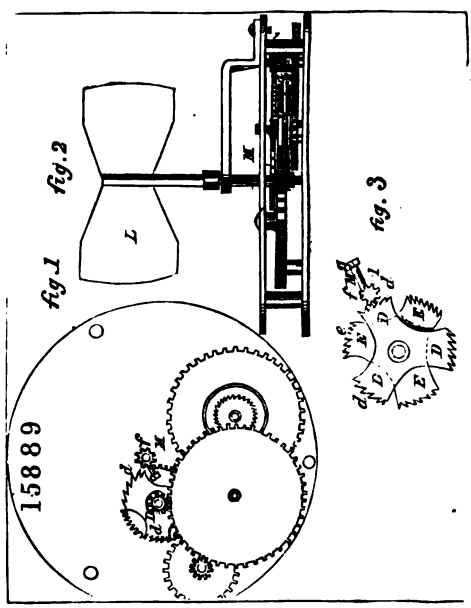

14706

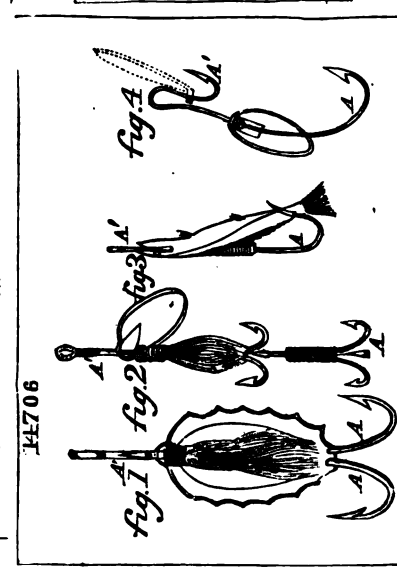

Digitized by Google

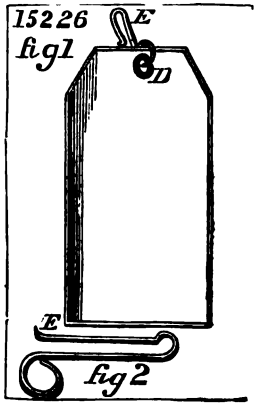

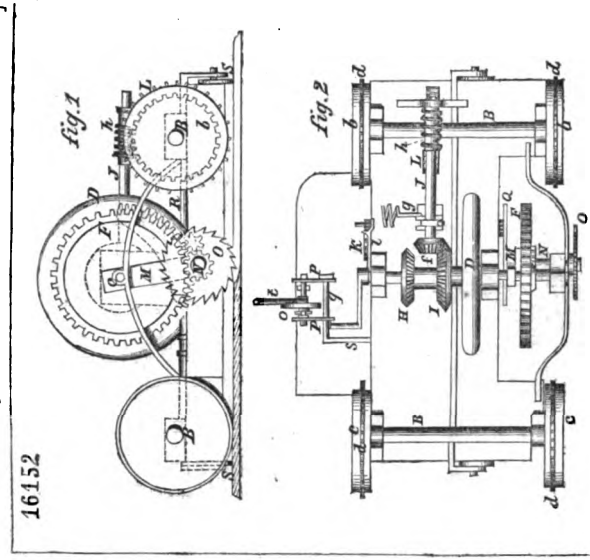

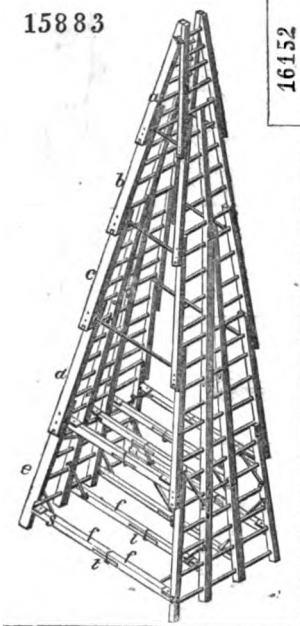

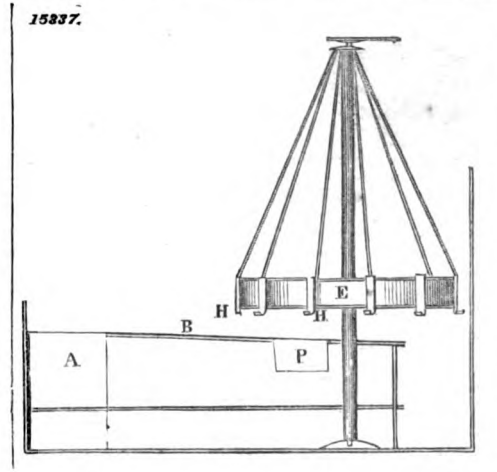

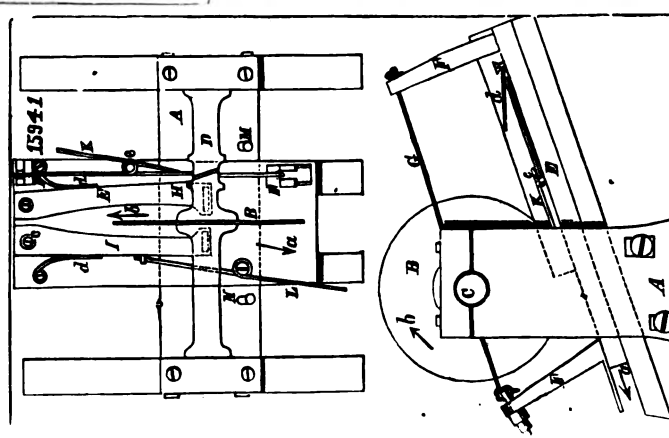

Digitized by Google

1478

fig 1

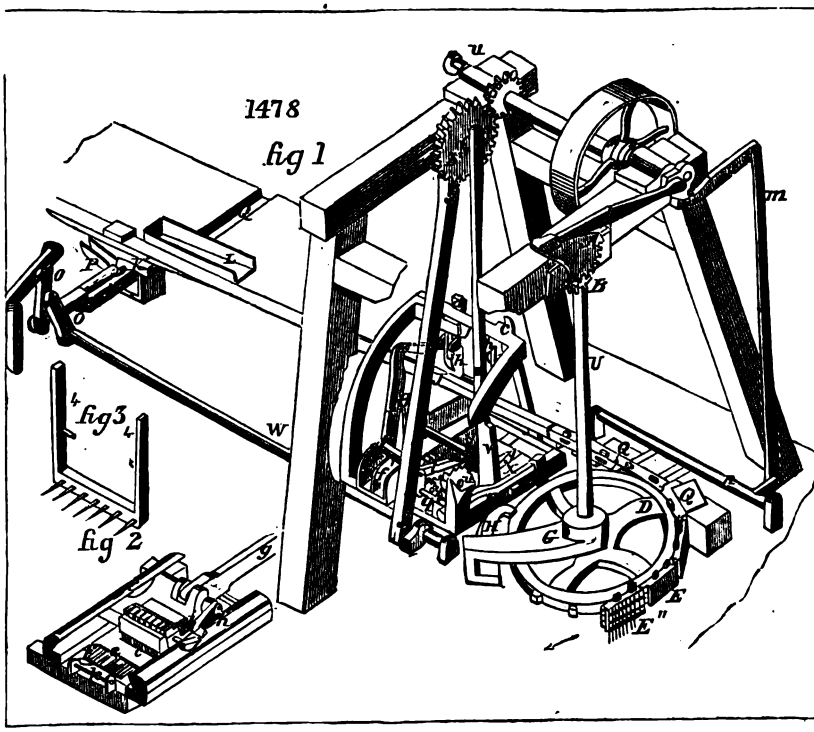

15483

15393

fig. 1

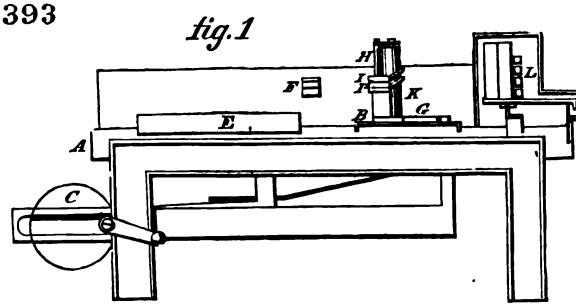

fig. 2

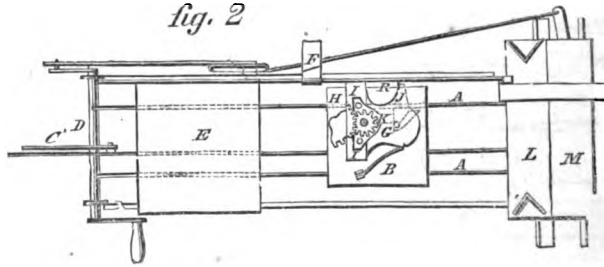

Digitized by Google

16312

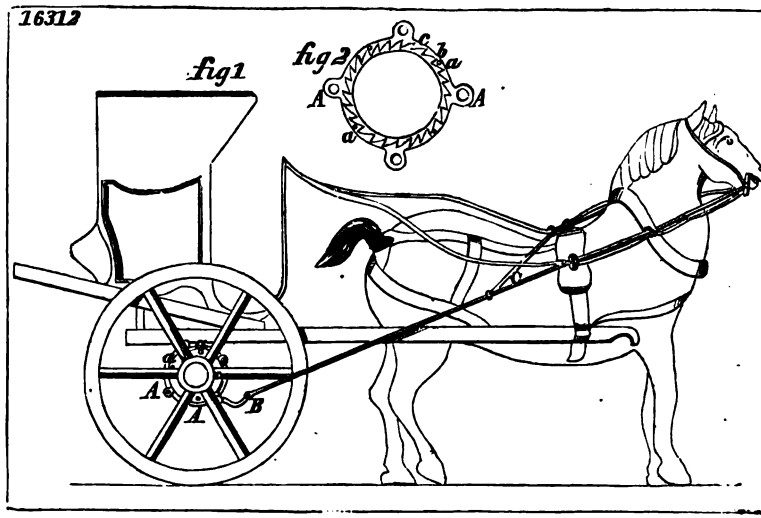

15238

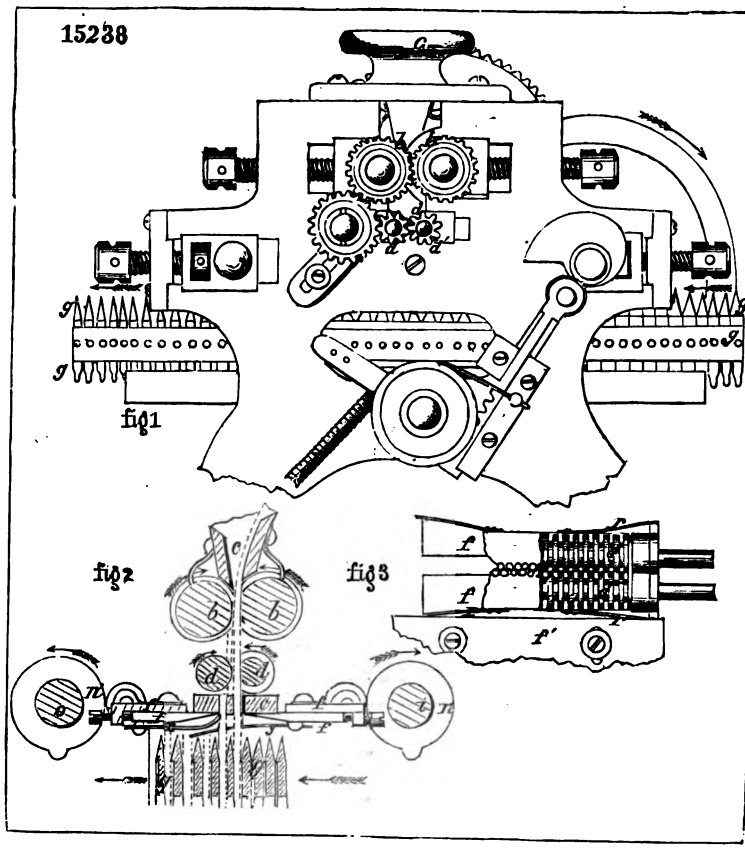
fig1
fig2
fig3
c
b
b
d
d
f
f
f'
f
f
f

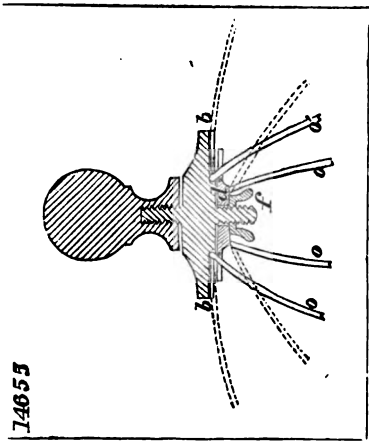

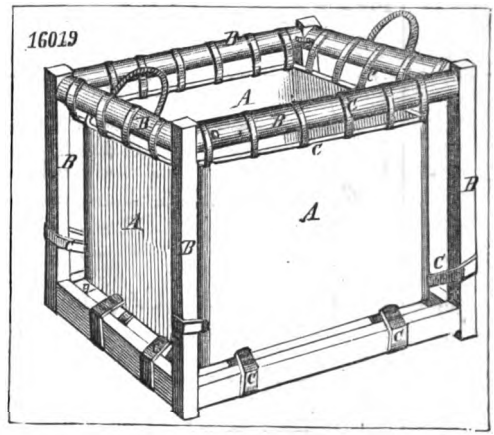

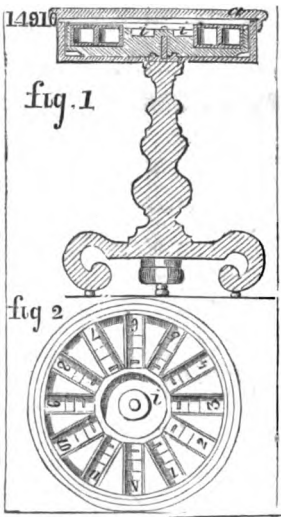

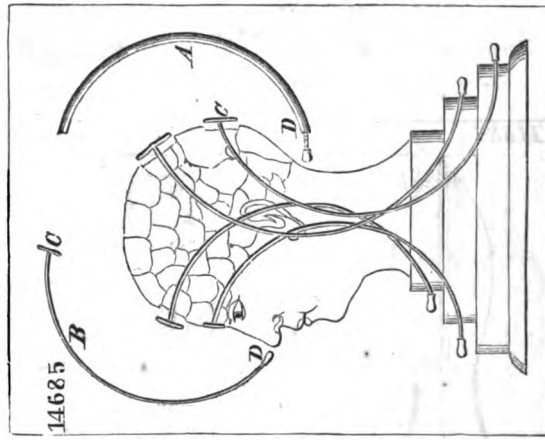

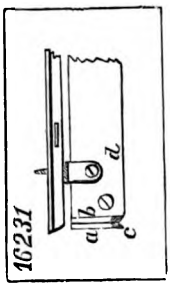

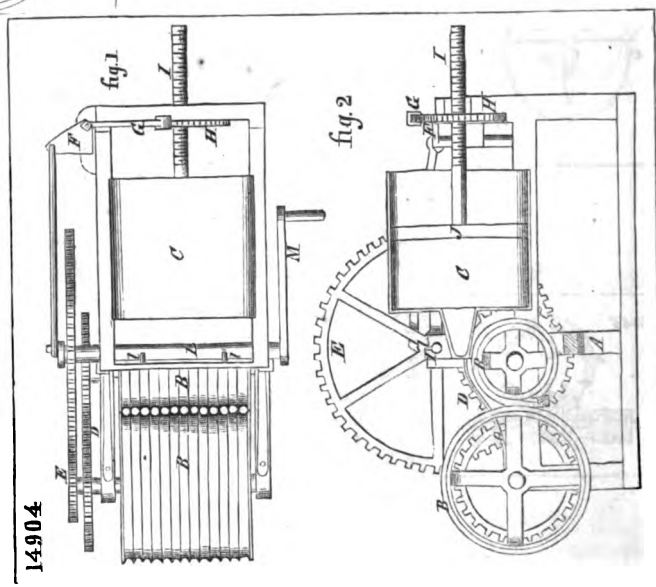

Digitized by Google

14624

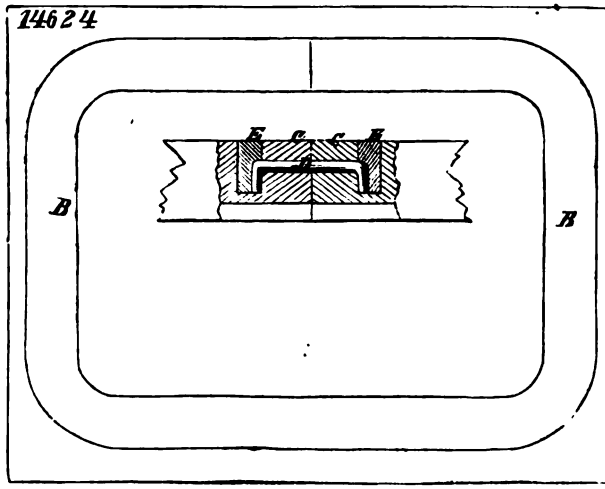

14490

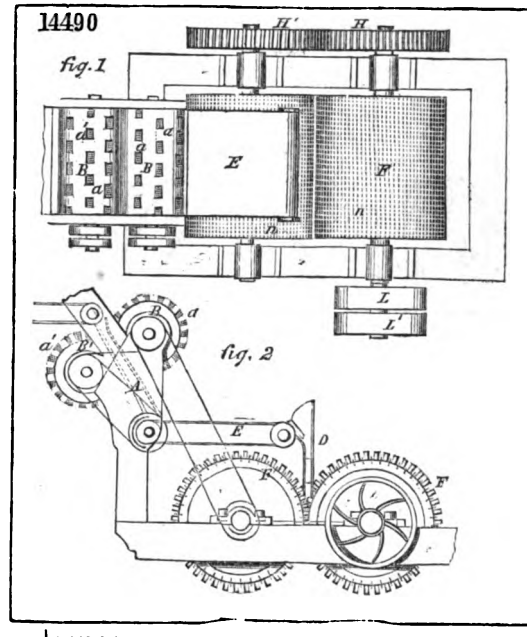

14586

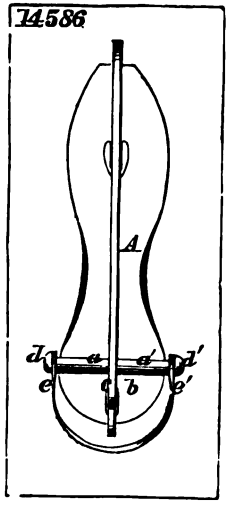

14740

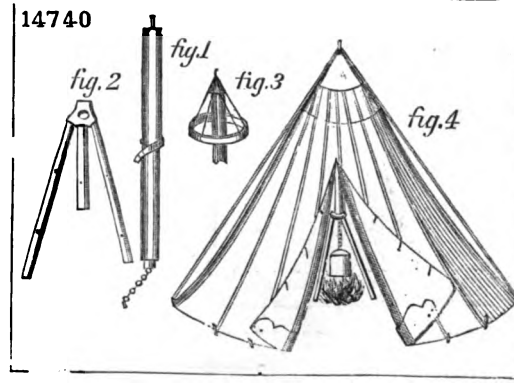

15366

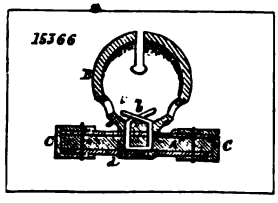

Digitized by Google

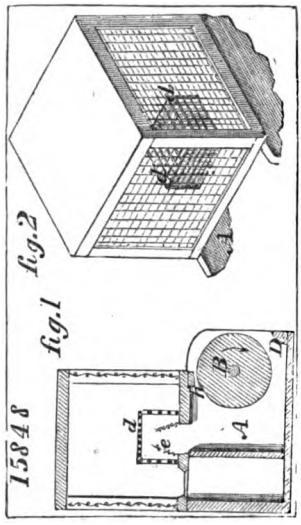

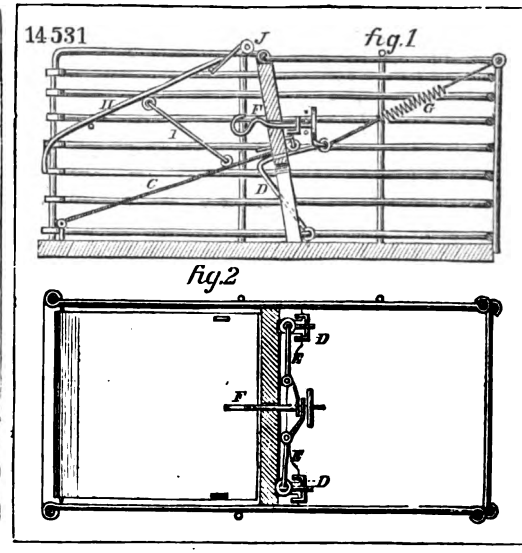

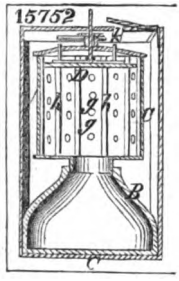

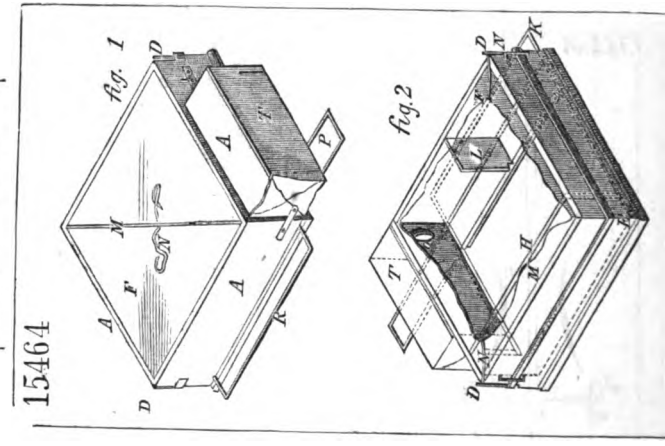

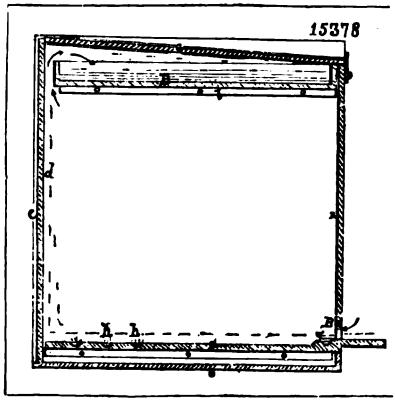

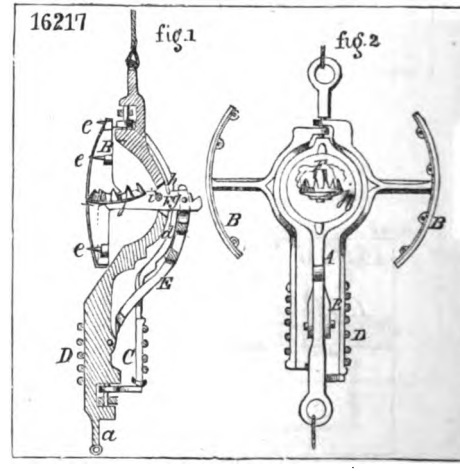

Digitized by Google

14669

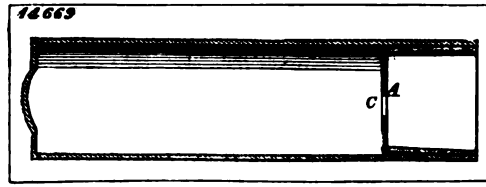

14612

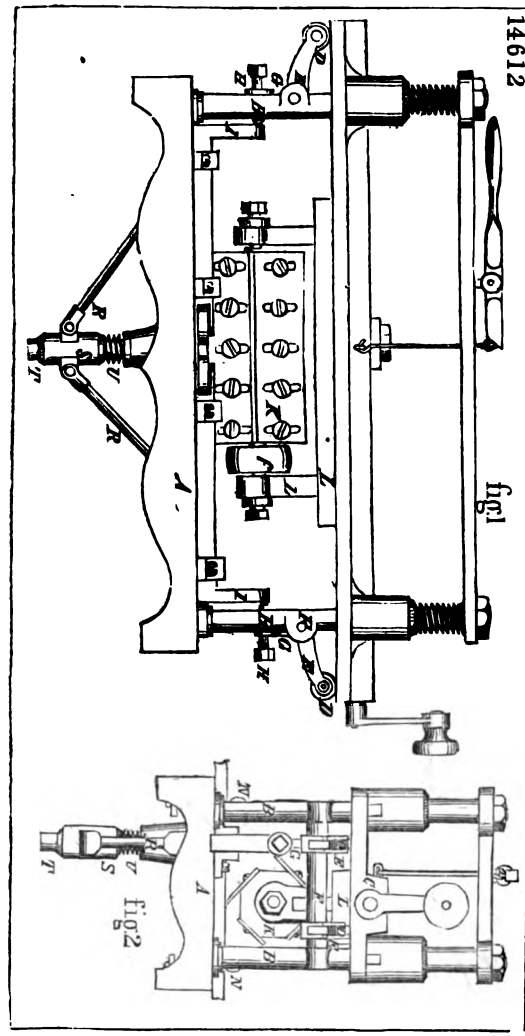

14336

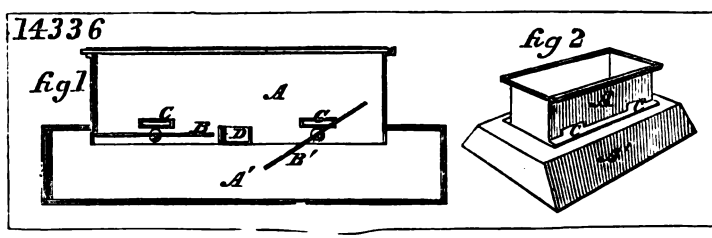

Digitized by Google

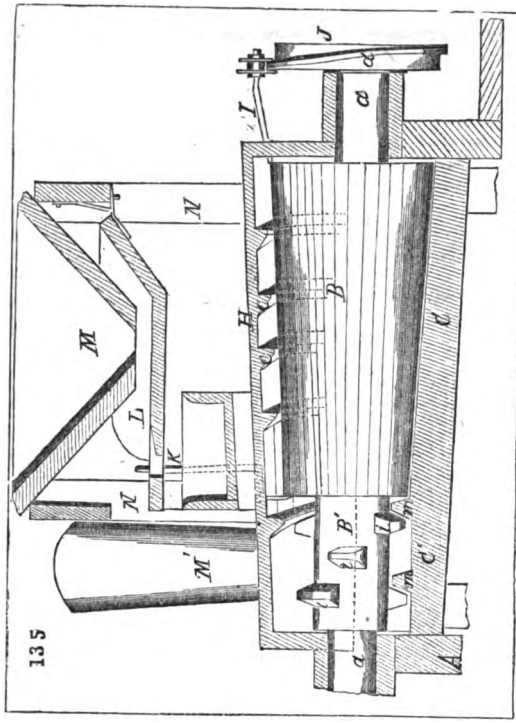

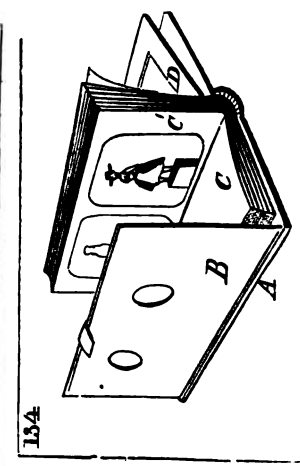

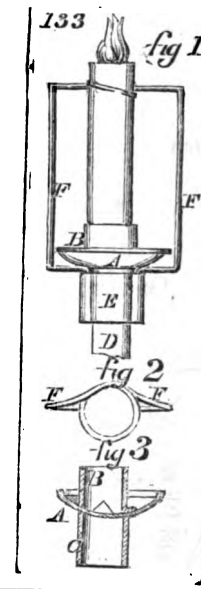

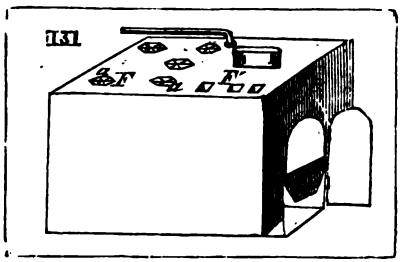

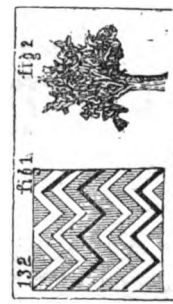

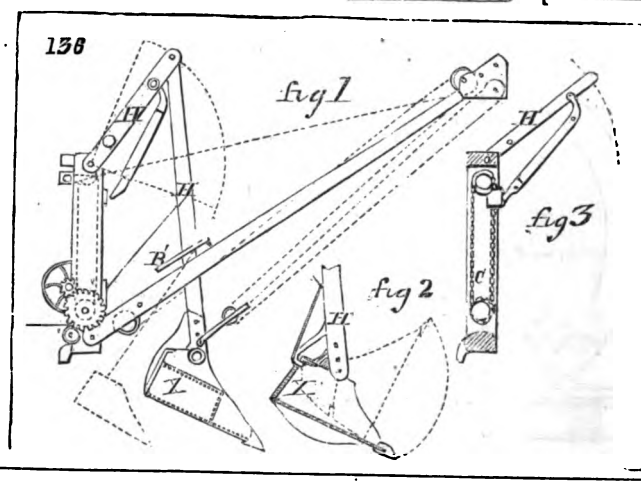

Digitized by Google

139

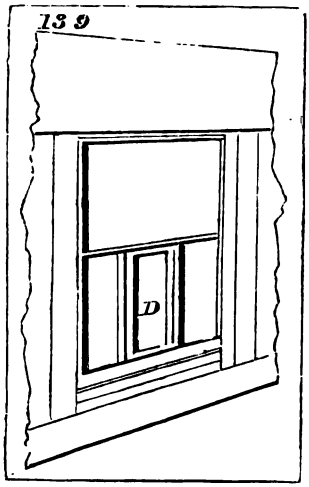

137

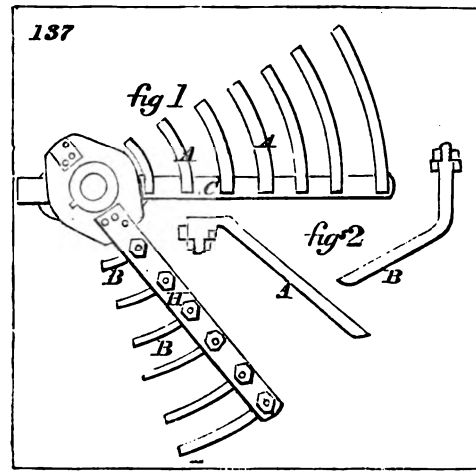

140

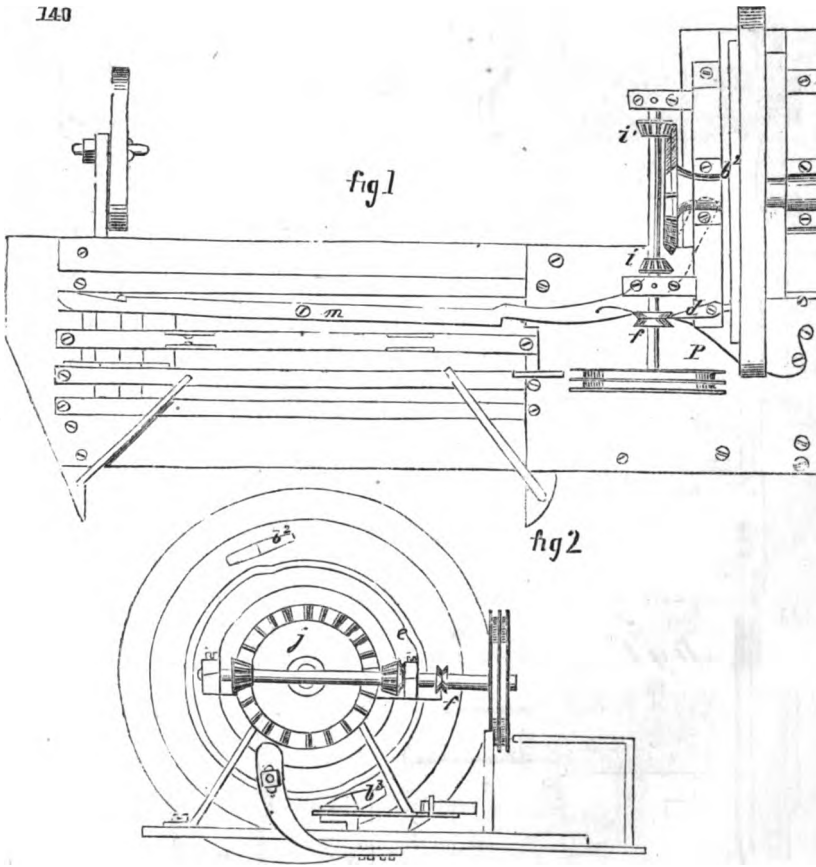

Digitized by Google

141.

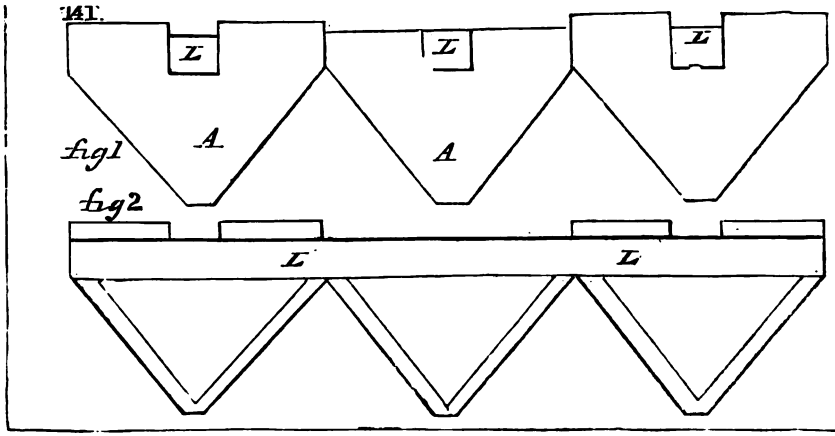

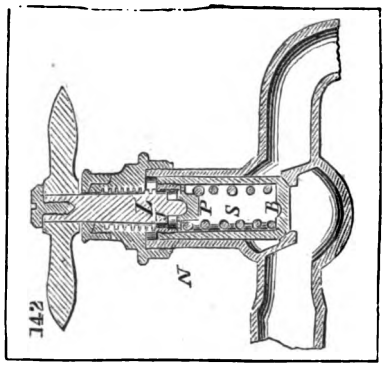

142

143

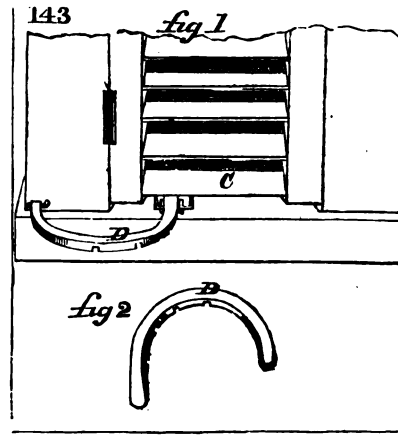

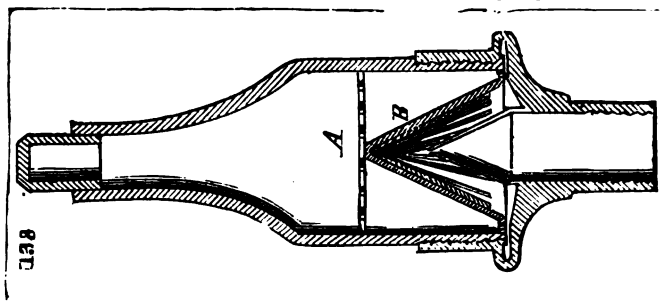

138

144.

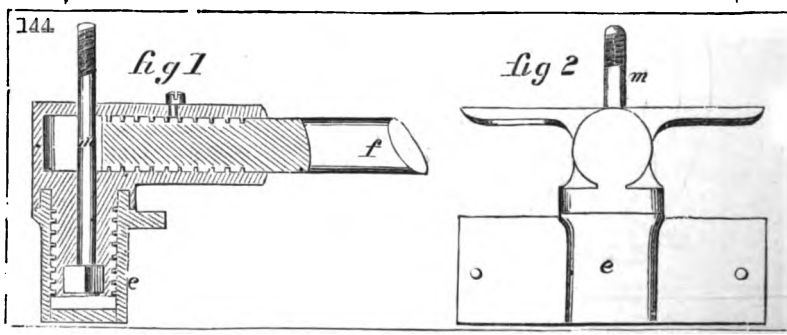

Digitized by Google

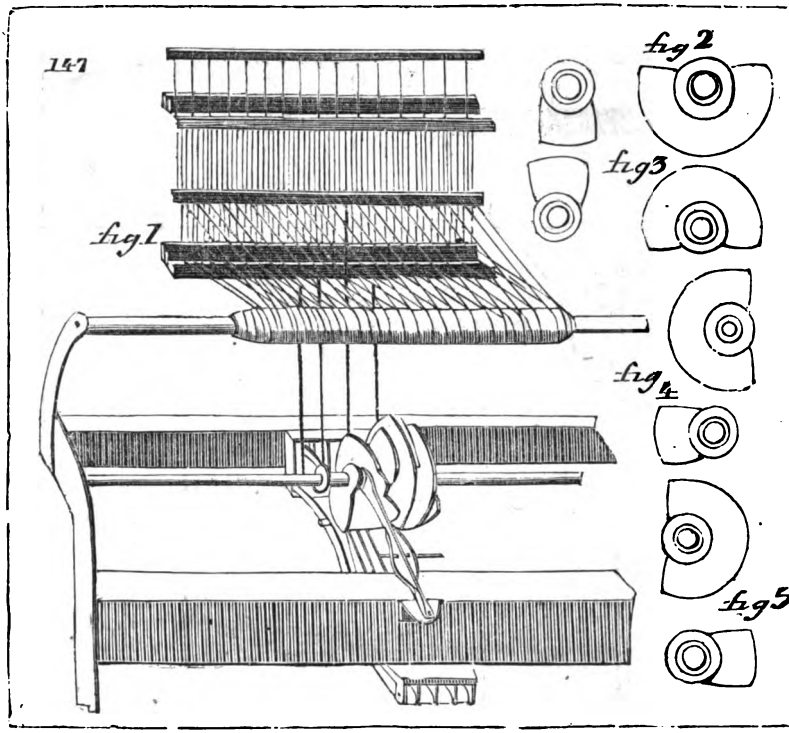

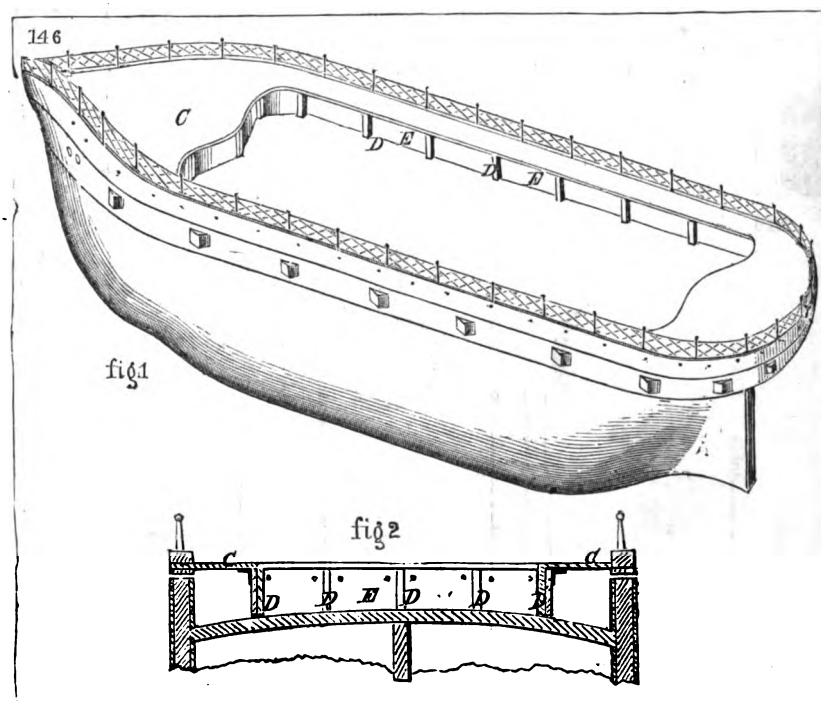

Digitized by Google

145

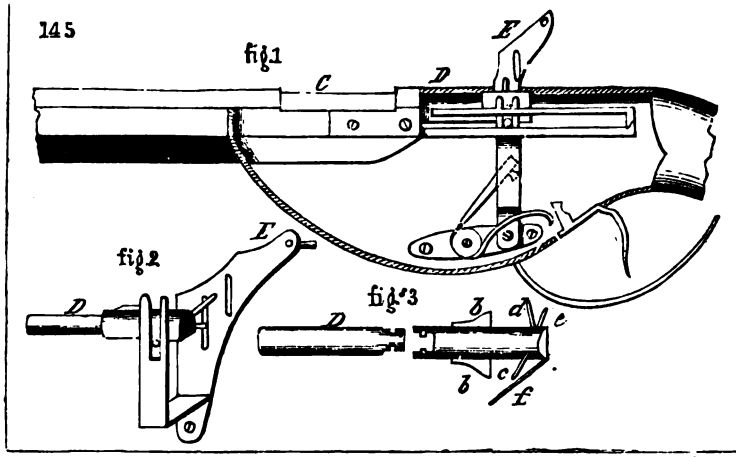

153

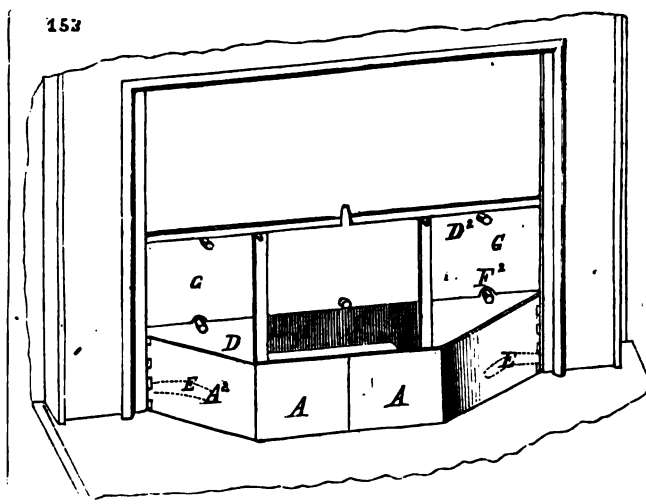

148

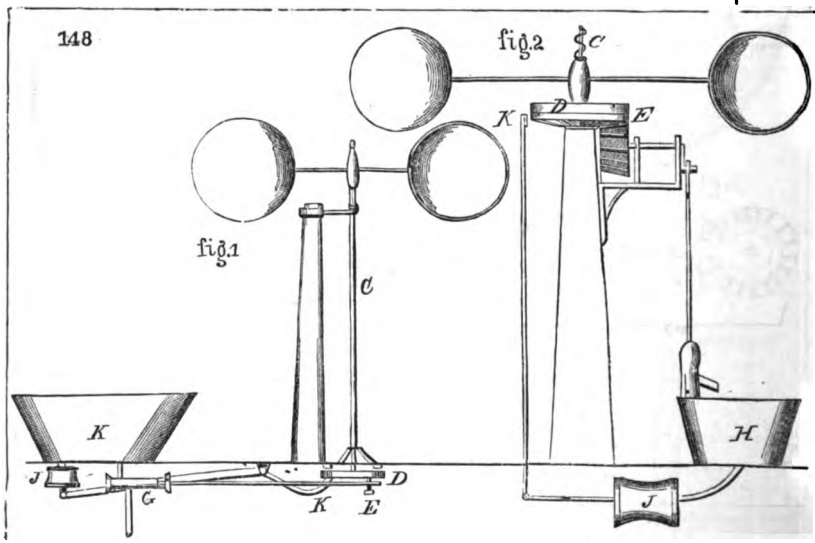

Digitized by Google

154

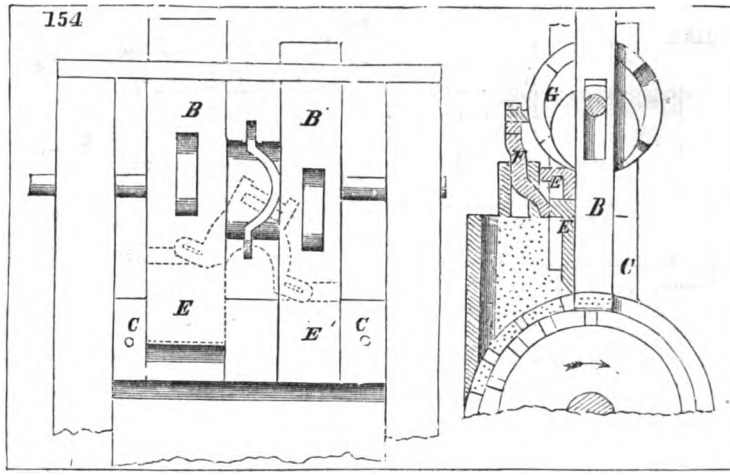

152

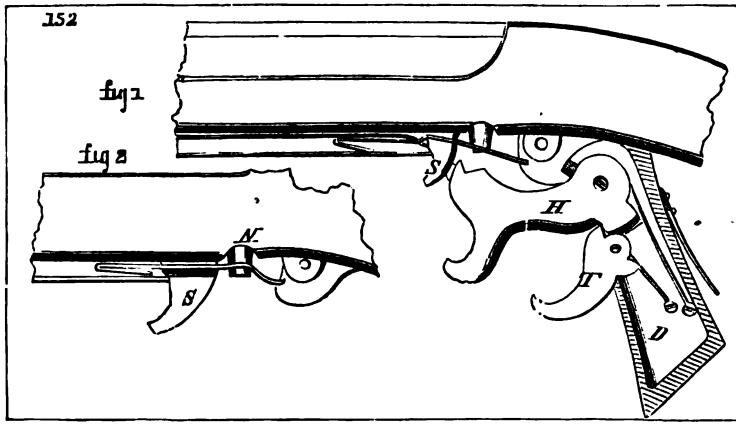

155

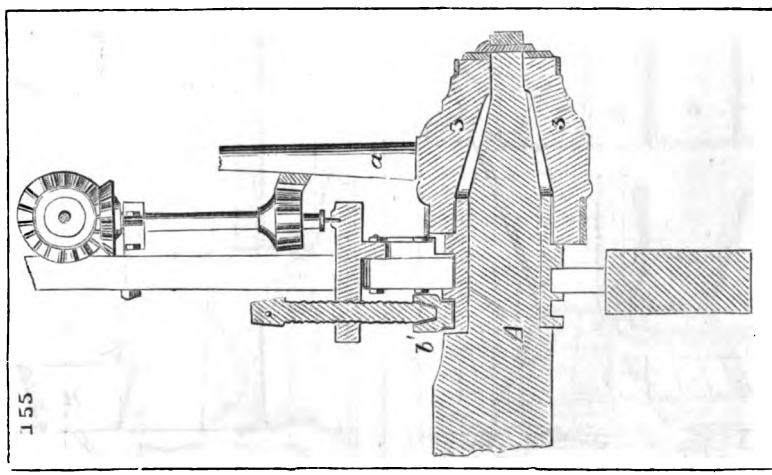

Digitized by Google

156

fig. 1

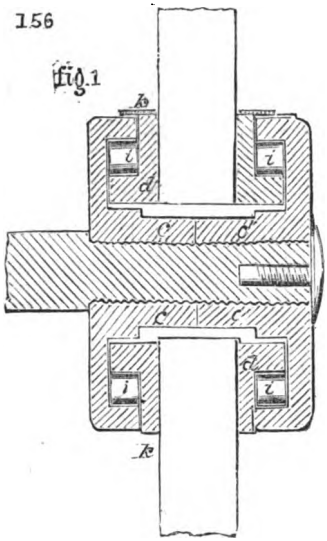

fig. 2

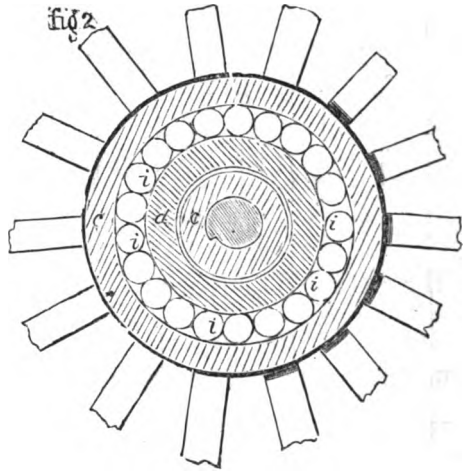

150

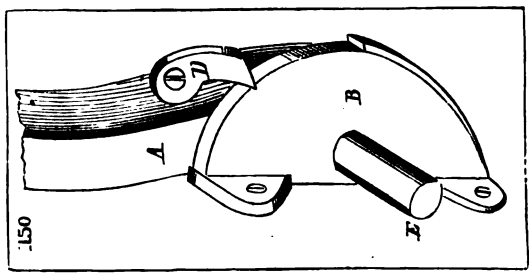

149

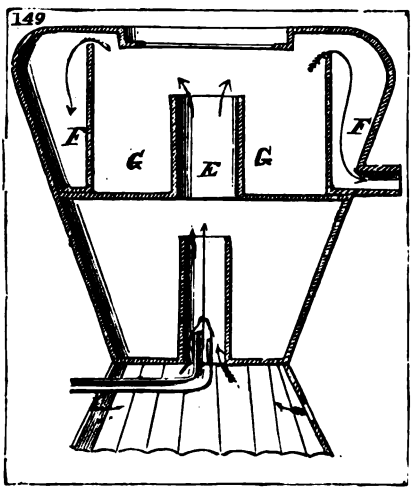

157

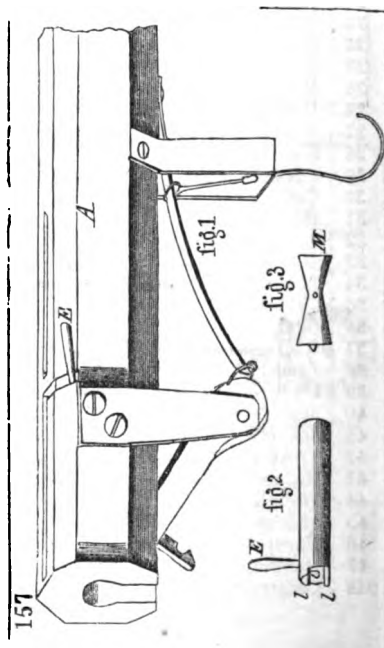

Digitized by Google

INDEX

TO THE

DESCRIPTIONS AND ILLUSTRATIONS.

[The descriptions contained in the second volume are indicated by the number II.]

No.	Invention or Discovery.	Text.	Plates.
14,008	Furnace for Soldering	547	187
9	Chain for Power-Press	II, 145	342
10	Operating and Lubricating Slide-Valves	618	231
11	Nut-Box	400	104
12	Brick Press	II, 245	415
13	Plough	320	44
14	Safety-Guard for Railroad Cars	II, 83	299
15	Wind-Mill	II, 132	333
16	Printing-Press	II, 368	501
17	Repeating Fire-Arm	II, 405	520
18	Spoke-Shave	II, 224	401
19	Shirt-Collars	II, 430	533
20	Machine for Pegging Boots and Shoes	II, 271	440
21	Smoke-House	II, 50	278
22	Sewing-Machine	476	154
23	Gold-Amalgamator	351	71
24	Pump	II, 116	318
25	Machine for making Eave-Troughs	II, 29	263
26	Harvester	272	13
27	Bed for Lath-Sawing Machines	II, 183	371
28	Sash-Lock	416	114
29	Pump	II, 115	318
30	Padlock	381	89
31	Hay and Cotton Press	II, 145	342
32	Automatic Electrical Circuit-Breaker	II, 5	247
33	Steam-Boiler Alarm	585	209
34	Repeating Magazine Fire-Arm	II, 408	520
35	Velocimeter for Vessels	640	244
36	Grain-Binder for Harvesters	292	29
37	Composition for Treating Wool	502	--------
38	Feed-Rollers for Planing-Machines	II, 194	378
39	Hydro-Pneumatic Pump for Diving Bells	II, 117	320
40	Manufacture of Leather Shoe-Bindings	II, 285	449
41	Screw-Machine	417	114
42	Treating Oils	523	--------
43	Harvester Raking Apparatus	271	13
44	Plough	320	48
45	Making Illuminating Gas	508	170
46	Harvester	273	13
47	Hanging Double Doors	II, 28	262
14,048	Constructing the Bottoms of Vessels	631	238

Digitized by Google

No.	Invention or Discovery.	Text.	Plates.
14,049	Machine for Sheet-Metal Bending	393	99
50	Scuttle Cover	II, 48	277
51	Bee-hive	257	1
52	Form of Building Bricks	II, 246	419
53	Disinfecting Fecal Matter	505	--------
54	Street-Paving Machine	II, 43	274
55	Filing Saws	II, 213	394
56	Watch-Key	II, 382	510
57	Breech-Loading Fire-Arm	II, 395	516
58	Attaching Hammer-Heads to Shafts	370	87
59	Padlock	388	94
60	Peg-Cutter for Boots and Shoes	II, 270	439
61	Machinery for making Weaver's Harness	490	161
62	Manufacture of Hats	452	134
63	Mode of Burning Wet-Fuel	547	--------
64	Gas-Cooking Stove	581	206
65	Cheese-Press	II, 143	341
66	Machine for Loading Dirt-Cars	II, 79	297
67	Horse Hay-Rake	329	57
68	Excavating-Machine	II, 30	264
69	Preventing Bank-Notes, &c., from being Counterfeited	II, 334	--------
70	Blades of Mowing-Machines	306	39
71	Mortising-Machine	II, 187	375
72	Machine for Sawing Marble Obelisk	II, 255	424
73	Seeding-Machine	337	54
74	Candle-Stick	536	182
75	Cultivating Plough	324	51
76	Corn-Harvester	282	20
77	Fire-Arm	II, 386	512
78	Mowing-Machine	303	35
79	Harvester	273	14
80	Manufacture of Boots and Shoes	II, 270	438
81	Supporting Propeller-Shaft and Receiving Rudder	606	222
82	Variable Dial for Dividing Engines	603	220
83	Extension Railroad-Car	II, 70	291
84	Feeding Sheets of Paper to Printing-Presses	II, 375	505
85	Curing Varicocele, Sterility, &c	II, 422	--------
86	Machine for Heading Bolts	356	73
87	Lantern	570	200
88	Heading Spikes	423	121
89	Operating Fire-Engines	II, 104	313
90	Hydrant	II, 112	316
91	Gas-Burner	554	191
92	Lock-Gate Valve	II, 41	273
93	Extension Table	II, 324	469
94	Reefing Sails	629	237
95	Fire-Arm	II, 387	513
96	Attaching Thills to Axles	II, 63	287
97	Implements for Pruning Trees	327	54
98	Cotton Press	II, 143	341
99	Regulating the Speed of Wind-Mills	II, 138	337
100	Brick-Machine	II, 238	411
101	Shingle-Machine	II, 217	397
102	Grain and Grass-Harvester	286	25
103	Shingle-Machine	II, 218	397
104	Steering-Wheel Stopper	637	242
105	Bits for Boring Felloes and Tenoning Spokes	II, 167	357
106	Mortising-Machine	II, 187	375
107	Safety Coal-Hole Cover	II, 26	260
108	Steam Stop-Valve	620	229
14,109	Machine for Dressing Mill-Stones	II, 161	353

Digitized by Google

No.	Invention or Discovery.	Text.	Plates.
14, 110	Making Clothes-Pins	II, 308	461
111	Wash-Board	II, 325	469
112	Door-Fastening	361	76
113	Cargo-Ports for Ships and other Vessels	630	238
114	Remelting Iron Scraps	375	84
115	Casting Metals	395	96
116	Straw-Cutter	345	65
117	Ditching-Machine	II, 28	262
118	Revolving Fire-Arm	II, 409	522
119	Platform Scales	II, 146	343
120	Yarn-Dressing Frame	493	162
121	Machinery for Felting Hat-Bodies	450	133
122	Box for Coating Daguerreotype Plates	II, 335	475
123	Curtain Fixtures	II, 312	462
124	Oscillating Engine	594	214
125	Working Steam-Valves as Cut-Offs	619	230
126	Lath-Machine	II, 182	370
127	Grain and Grass Harvester	286	24
128	Hanging Mill-Stone	II, 161	353
129	Hydro-Carbon Vapor Apparatus	532	180
130	Machine for Bending Plough Handles, &c	II, 196	382
131	Opening and Closing Farm-Gates	II, 37	268
132	Flouring Mill	II, 158	352
133	Eccentric Explosive Shell	II, 419	526
134	Cotton-Seed Planter	310	42
135	Arrangement of Tan-Vats	533	180
136	Machine for Dressing Sticks to Polygonal Forms	II, 228	405
137	Riveting-Machine	413	113
138	Mowing-Machine	303	37
139	Ventilating Railroad Cars	II, 84	301
140	Hammering Leather for Soles and Heels of Boots and Shoes	II, 273	441
141	Sewing-Machine	471	156
142	Grate-Bars	559	194
143	Regulating the Velocity of Wind-Wheels	II, 138	338
144	Seed-Planter	315	51
145	Operating the Steam-Valves in Blower Engines	619	231
146	[Cancelled]		
147	Primers for Cartridges	II, 403	517
148	Grain and Grass-Harvester	286	26
149	Harvester-cutter bars	269	10
150	Operating the Throttle-Valve of Steam Engines	620	231
151	Shot-Pouch	II, 420	527
152	Field-Fence	II, 34	265
153	Locomotive Furnace-Grates	548	187
154	Machine for Replacing Railroad Cars	II, 81	298
155	Brick-Machine	II, 238	412
156	Scaffold	II, 48	277
157	Telegraphic Register	II, 14	254
158	Heating Buildings by Steam	561	195
159	Universal Joint for Connecting Shafts, &c	II, 149	343
160	Mortising Tool	II, 189	376
161	Pill-Making Machine	II, 424	531
162	Apparatus for Stencilling Window-Shades	II, 332	474
163	Mastic for Covering Walls	519	
164	Grinding-Mills	II, 159	352
165	Machines for Cutting Flocks and Paper Stock	472	150
166	Punching-Machine	412	111
167	Hinge	370	82
168	Bee-hive	257	1
14, 169	Machine for Clearing Snow from Railroad Tracks	II, 92	305

Digitized by Google

No.	Invention or Discovery.	Text.	Plates.
14, 170	Screw-Jack	II, 142	340
171	Chimney-Cowl	539	183
172	Attaching Teeth to Saw-Plates	II, 208	391
173	Tree-Nail Machine	II, 230	406
174	Buggy Wagon	II, 98	308
175	Belt or Band Fastening	II, 140	339
176	Soldering Iron	421	116
177	Machine for Cutting Mouldings in Marble	II, 255	426
178	Cell Lock	380	89
179	Flouring-Mill	II, 158	352
180	Bell Stench-Trap	II, 54	281
181	Corn-Dryer	543	185
182	Ore-Washer	403	108
183	Raking Attachment to Harvesters	293	29
184	Photographic Plate-Vise	II, 360	492
185	Lugs for Cast-Iron Shingles	II, 49	278
186	Pump	II, 118	319
187	Heating Feed-Water Apparatus for Locomotives	605	222
188	Saw-Set	II, 211	392
189	Cutting Files	365	79
190	Three-Wheeled Vehicle	II, 97	308
191	Feed-Water Pump for Steam-Boilers	587	210
192	Bench Vise	427	120
193	Machine for Bending Ship Hooks	372	82
194	Machinery for Making Rope	474	141
195	Brick-Press	II, 245	417
196	Hot-Air Furnace	552	189
197	Carriage-Springs	II, 75	295
198	Weighing-Scales	II, 147	343
199	Flour-Bolt	II, 151	346
200	Fire-Poker	573	202
201	Lantern	571	200
202	Fastening for the Hinges of Daguerreotype Cases	II, 335	475
203	Metallic Pen	II, 357	492
204	Oscillating Steam-Engine	598	218
205	Harvester	274	14
206	Saw-mill	II, 206	388
207	Sewing-Machine	477	154
208	Constructing Cast-Iron Buildings	II, 23	259
209	Alarm Lock	378	87
210	Making Wrought-Iron Shafts	II, 149	343
211	Machines for Softening Leather	II, 279	445
212	Grain and Grass Harvester	287	25
213	Belt-Fastening	II, 139	339
214	Movement for the Doctors of Calico-Printing Machine	II, 367	495
215	Many-Chambered Breech-Loading Cannon	II, 383	511
216	Attaching Composition Soles to Boots and Shoes	II, 269	438
217	Writing Desk	II, 332	474
218	Machinery for Cutting Sand-Paper	472	149
219	Scissors	II, 321	466
220	Tonguing and Grooving Tapering Boards	II, 229	405
221	Wrench	429	122
222	Power Loom	465	147
223	Machine for Boring and Turning Wood	II, 169	359
224	Plough	320	49
225	Valves and Exhaust Passages of Steam-Engines	613	225
226	Signals for Vessels	639	243
227	Regulating Feed-gates for Mills, &c.	II, 158	351
228	Rotary Planer for Felloes	II, 190	377
229	Oil Lamp	571	200
14, 230	Removing Incrustations of Boilers	583	.....

Digitized by Google

No.	Invention or Discovery.	Text.	Plates.
14,231	Adjustable Carriage-Seat	II, 75	292
232	Railroad Car Axles	II, 61	286
233	Gas and Steam Cooking Apparatus	554	191
234	Sticking Pins in Paper	405	108
235	Seed-Planter	315	46
236	Lubricator	517	175
237	Power Loom	465	146
238	Hand-Press for Stamping Letters	II, 364	495
239	Condensing Steam-Engines used for Pumping	593	213
240	Cotton-Seed Planters	310	43
241	Hanging and Adjusting Circular Saws	II, 211	392
242	Elevator for Puddlers' Balls	412	110
243	Wrench	430	121
244	Steam Condenser	592	212
245	Sealing Preserve Cans	II, 302	457
246	Porte-Monnaie	II, 362	494
247	Diaphragm Pump	II, 457	323
248	Wick-Holder for Argand Lamps	564	197
249	Wrench	429	121
250	Grain Harvester	285	21
251	Ship's Compass	II, 3	245
252	Method of Extinguishing Fires	546	186
253	Breech-Loading Fire-Arm	II, 396	518
254	Cultivator Teeth	267	9
255	Envelope for Bottles	II, 437	538
256	Safety Spring-Coupling	II, 86	302
257	Fluxing Blast Furnaces	368	81
258	Bolt Machine	354	74
259	Grating Green Corn	II, 311	461
260	Machine for Folding Paper, &c	II, 347	488
261	Oil Box for Axles with Conical Journals	II, 142	341
262	Clothes Clamp	II, 307	460
263	Cutter-Head for Planing Machine	II, 195	380
264	Railroad Switch	II, 53	281
265	Railroad Car-Coupling	II, 87	302
266	Grain and Grass Harvester	287	24
267	Construction of Mastic Roofing	II, 46	--------
268	Concaving Circular Saws	II, 210	392
269	Pegging Boots and Shoes	II, 270	440
270	Potato-Planter	II, 455	39
271	Caldron	535	181
272	Gearing for Feed-Rollers of Planing Machines	II, 196	380
273	Construction of Cisterns	II, 25	259
274	Machine for Sowing Seed Broadcast	342	55
275	Forks	II, 313	463
276	Fountain-Pen	II, 354	490
277	Machines for Sawing Marble	II, 254	426
278	Cooking Stove	578	205
279	Rolling Metal	392	97
280	Forging Thimbles	367	80
281	Vault-Cover	II, 56	284
282	Grapple for Raising Stone	II, 141	340
283	Sewing Guide	475	153
284	Seeding Machine	337	57
285	Power-Loom	466	148
286	Pen-Holder	II, 356	490
287	Mole of Draining-Ploughs	325	46
288	Plough	321	48
289	Machine for Tenoning Window-Blinds	II, 229	405
290	Billiard-Table Cushions	II, 436	537
14,291	Applying Shafts to Axles	II, 64	287

Digitized by Google

No.	Invention or Discovery.	Text.	Plates.
14,292	Temple for Looms	468	147
293	Construction of Pessaries	II, 424	530
294	Hubs for Carriages	II, 88	302
295	Machine for Printing from Engraved Plates	II, 365	497
296	Machine for Sawing Marble in Obelisk Form	II, 253	422
297	Machine for Preparing Vegetables for Preservation	II, 324	469
298	Furnace for Heating Slugs for the use of Hatters and others	550	188
299	Stave-Machine	II, 226	404
300	Photographic Pictures on Japanned Surfaces	II, 360	--------
301	Machine for Depositing Coal in Cellars	II, 24	259
302	Pitman	II, 190	376
303	Machine for Edging Wall Paper	II, 352	486
304	Wagon	II, 97	308
305	Mill Saw	II, 204	385
306	Combined Knife and Pencil Case	II, 340	477
307	Dovetailing Machine	II, 173	363
308	Machinery for making Shirt Collars	II, 430	533
309	Churn	259	2
310	Box for Carriage Hubs	II, 88	302
311	Coupling for the Joints of Felloes	II, 85	301
312	Air Cock for Steam-Heating Apparatus	575	203
313	Girder for Bridges	II, 23	259
314	Arched Trussed Bridge	II, 21	257
315	Projectile	II, 415	525
316	Machine for separating Gold, &c., from foreign substances	369	82
317	Lamp	563	196
318	Domestic Steam Generator	575	203
319	Percussion-Lock for Fire-Arms	II, 404	519
320	Painting or Varnishing Woven Wire	526	--------
321	Horse Rake	329	52
322	Binding Guide	432	123
323	Constructing Walls and Floors of Cellars	II, 24	--------
324	Sewing Machine	477	156
325	Apparatus for Heating by Gas	556	192
326	Door Springs	362	77
327	Boring Machine	II, 171	359
328	Velocimeter for Vessels	640	244
329	Instruments for Measuring the length of Braces	II, 172	362
330	Machinery for Hardening Hats	451	133
331	Excluding Dust from Railroad Cars	II, 82	299
332	Bending Sheet Metal	392	98
333	Cultivating-Plough	324	51
334	Coffee-Pot	II, 309	460
335	Water-Metre	II, 114	318
336	Roach Trap	II, 452	547
337	Wheelwright's Machine	II, 233	407
338	Operating the Valves of Steam-Engines	615	228
339	Sawing Machine	II, 200	383
340	Apparatus for Cooking with Quick Lime	543	184
341	Machine for Sweeping Streets	II, 50	278
342	Machine for Sawing Marble in Taper Form	II, 254	426
343	Manufacturing Hats	452	135
344	Corn Harvester	282	19
345	Skein for Axle-Arms	II, 60	286
346	Plough	321	49
347	Shingle Machine	II, 218	398
348	Steam Tubing for Heating Buildings	562	196
349	Hinge for Shutters	370	82
350	Harvester-Rake	271	12
14,351	Self-Acting Farm-Gate	II, 38	271

Digitized by Google

No.	Invention or Discovery.	Text.	Plates.
14,352	Lubricator	517	175
353	Boot-Crimp	II, 267	438
354	Machine for Shearing Sheep	341	64
355	Portable-Houses	II, 40	272
356	Supplementary Grating for Stoves, &c	581	206
357	Riffle-Box	413	109
358	Power-Loom	466	149
359	Guard for Coal-Holes	II, 26	260
360	Heating Buildings by Combination of Gas, Air, and Steam	562	196
361	Weighing-Scales	II, 148	343
362	Stove for Railroad-Cars, &c	577	204
363	Bench-Planes	II, 191	377
364	Railroad-Car Seats	II, 79	297
365	Increasing the Buoyancy of Vessels	631	238
366	Handle for Vise	427	118
367	Scythe Rifle	418	114
368	Bottling Fluids under Gaseous Pressure	507	170
369	Lamp for Burning Rosin Oil	565	197
370	Machine for Pegging Boots and Shoes	II, 272	439
371	Attaching Hubs to Axles	II, 89	303
372	Air-Escape for Pumps	II, 120	321
373	Gang-Plough	325	52
374	Corn-Sheller	263	4
375	Tanning Apparatus	II, 287	447
376	Candle-Dipping Machine	499	167
377	Ship's Capstan	632	239
378	Guitar	II, 339	477
379	Adjusting Circular-Saws	II, 209	391
380	Application of Soles to Boots and Shoes	II, 268	438
381	Machine for Heading Bolts	356	74
382	Weighing-Scale Beams	II, 149	343
383	Construction of Grand Pianos	II, 361	493
384	Constructing Cast-Iron Pavement	II, 42	273
385	Railroad-Car Brake	II, 66	288
386	Hot-Blast Apparatus	534	681
387	Valve for Lock-Gates	II, 40	269
388	Ore Washer	404	104
389	Manufacture of India-Rubber Belting	II, 139	--------
390	Bench-Clamp	II, 167	356
391	Washing Machine	II, 327	470
392	Apparatus for Heating Buildings by Steam	561	196
393	Sewing Machine	478	154
394	Machinery for Preparing Hemp and Flax	452	138
395	Apparatus to prevent Horses in Carriages from falling	II, 74	293
396	Parallel-Rulers	II, 12	251
397	Preparation of Tallow for making Candles	501	169
398	Spark Conductors for Locomotive Trains	575	203
399	Tanning	II, 287	--------
400	Carriage-Top	II, 78	296
401	Machinery for Ironing Hats	451	136
402	Cutter for Harvesters	269	11
403	Spirit Blow-Pipe	535	181
404	Mowing-Machine	304	38
405	Bending Wood	II, 236	410
406	Revolving Fire-Arm	II, 410	523
407	Carriage-Hubs	II, 88	302
408	Steam-Boiler	583	207
409	Grain and Grass Harvester	287	27
410	Straw-Cutter	345	65
411	Lime-Kiln	II, 251	422
14,412	Puddling Iron	375	85

Digitized by Google

No.	Invention or Discovery.	Text.	Plates.
14,413	Straining Mulley Saws	II, 215	394
414	Apparatus for Heating or Cooking by Gas	557	193
415	Boxes for Axles	II, 62	286
416	Mortising and Boring Machine	II, 168	358
417	Securing Thills to Axles	II, 65	287
418	Apparatus for Making Extracts	505	169
419	Reducing the Friction of Slide-Valves of Steam-Engines	616	228
420	Revolving Fire-Arm	II, 409	521
421	Machine for Cutting Irregular Forms	II, 176	366
422	Harvester-Cutter	269	11
423	Plane-Stock	II, 191	377
424	Wrench	430	121
425	Fountain-Pen	II, 354	491
426	Machine for Cutting Out and Skiving the Soles of Boots and Shoes	II, 273	441
427	Dovetailing-Machine	II, 174	363
428	Grain and Grass Harvester	288	25
429	Faucet	II, 105	313
430	Leather-Splitting Machine	II, 279	444
431	Umbrella Ribs	II, 433	--------
432	Manufacture of Boot and Shoe Soles	II, 267	438
433	Sewing-Machine	478	153
434	Boxing Carriage Wheels	II, 99	310
435	Welding Steel	424	--------
436	Bench-Plane	II, 190	376
437	Apparatus for Roasting and Cooking by Gas	559	194
438	"Dumb Jockey"	II, 284	448
439	Hermetically Sealing Preserve-Cans	II, 302	457
440	Hernial Truss	II, 428	532
441	Grain and Grass Harvester	288	24
442	Making Chilled Castings	357	74
443	Carriage-Coupling	II, 72	292
444	Threshing-Machine	348	68
445	Mowing-Machine	304	36
446	Machine for Corking Bottles	II, 437	537
447	Fireplace	545	186
448	Grain and Grass-Harvester	289	26
449	Feed and Blow-off Apparatus for Steam-Boilers	587	209
450	Seeding-Machine	337	54
451	Inkstand	II, 340	477
452	Nut-Machine	400	101
453	Harvester-Cutter	270	11
454	Mortising Tool	II, 189	376
455	Rotary Planing-Knives	II, 192	378
456	Illuminating Grating	II, 40	272
457	Making Transparent Window Shades	524	177
458	Churn	259	2
459	Self-Regulating Wind-Wheel	II, 137	333
460	Percussion Projectile	II, 417	526
461	Stove	576	204
462	Machine for Felling Trees	349	68
463	Cone Tubes for Winding-Frames	492	160
464	Making Elastic Rubber Cloth	524	--------
465	Seed-Planter	316	47
466	Machine for Making Clothes-Pins	II, 309	461
467	Sectional Fire-Pot for Stoves and Furnaces	578	205
468	Boxes of Railroad Car Axles	II, 63	287
469	Harness Buckles	II, 276	442
470	Omnibus Register	II, 90	304
471	Machine for Sawing Marble in Taper Form	II, 254	425
14,472	Producing Designs on Wood	II, 235	--------

Digitized by Google

No.	Invention or Discovery.	Text.	Plates.
14,473	Adjusting the Brasses of Connecting Rods	II, 163	354
474	Nail-plate Feeding-Machines	399	104
475	Sewing-Machine	478	156
476	Machinery for Making Hat Bodies	447	134
477	Harness for Shoeing Horses	II, 276	443
478	Argand Lamp for Burning Rosin Oil	563	197
479	Boring-Machine	II, 172	361
480	Suspending Circular-Saw Spindles	II, 215	395
481	Stripping Top-Flats of Carding-Machines	435	125
482	Spinning-Wheel	488	160
483	Machine for Tunnelling Rocks	II, 54	282, 283
484	Safety Apparatus for Harnesses and Thills of Vehicles	II, 95	307
485	Adjusting Reciprocating Saws	II, 215	393
486	Cut-off Gear for Steam-Engines	597	216
487	Propelling Vessels	639	244
488	Needle-Gun	II, 413	524
489	Detaching Boats from their Tackle	622	232
490	Machine for Cutting Loaf-Sugar	II, 450	545
491	Breech-Loading Fire-Arm	II, 396	516
492	Regulating Flow of Oil to Wick in Carcel Lamps	564	197
493	Press for Punching	II, 145	344
494	Fruit or Grain Dryer	544	185
495	Stone-Drilling Machine	II, 263	436
496	[Number altered to 15,845]		
497	Paddle-Wheel	626	235
498	Water Cooler and Filter	II, 331	474
499	Lath-Machine	II, 182	371
500	Steam Radiator Cock	608	223
501	Miniature Case	II, 344	485
502	Pile-Driver	II, 44	275
503	Explosive Shell	II, 418	526
504	Hand Corn-Planter	312	45
505	Ash-Sifter	574	202
506	Fan Rocking-Chair	II, 305	459
507	Fan Rocking-Chair	II, 305	458
508	Spring Platform for Railroad-Cars	II, 83	300
509	Piano-Forte Action	II, 360	492
510	Cooling and Ventilating Rooms, &c	543	184
511	Carpenter's Bench	II, 166	357
512	Machine for Sweeping Streets	II, 51	279
513	Gun-Lock	II, 414	525
514	Wardrobe Bedstead	II, 300	456
515	Lever of Railroad-Car Brakes	II, 69	290
516	Valve-Motion for Oscillating Engines	611	227
517	Grain Separator	340	60
518	Field-Fence	II, 32	265
519	Portable Field-Fence	II, 35	267
520	Post-Driver	II, 45	275
521	Machine for Sizing Hat-Bodies	448	131
522	Clamp for Planking Ships	II, 173	363
523	Steam-Boiler	583	207
524	Syringe Bottle for Medical Agents	II, 426	531
525	Water-Metre	II, 127	328
526	Cock for Steam, Water, &c	II, 102	312
527	"Creepers" to Prevent Slipping on Ice, &c	II, 440	539
528	Wrench	431	122
529	Cotton-Seed Planter	311	42
530	Butter-Worker	258	1
531	Self-Setting Rat Trap	II, 452	546
532	Machine for Sawing Marble in Obelisk Form	II, 253	423
14,533	Cultivating Plough	319	47

Digitized by Google

No.	Invention or Discovery.	Text.	Plates.
14,534	Tools for Figuring Morocco	II, 281	445
535	Water-Wheel	II, 128	328
536	Machine for Sawing Marble in Obelisk Form	II, 253	424
537	Mould for Earthen Vessels, Pots, &c	II, 267	437
538	Machine for Raking and Loading Hay	331	54
539	Cotton Hiller	299	30
540	Cotton Scraper	335	62
541	Grain and Grass Harvester	290	27
542	Printing Cylinder	II, 364	496
543	Scythe Fastening	336	57
544	Harvester-Cutter	270	11
545	Regulating Variable Cut-Offs for Steam Engines	598	216
546	Wrench	431	122
547	Horse-Power	II, 155	348
548	Self-Inking Stamps	II, 380	509
549	Lubricator	518	175
550	Bench Vise	427	119
551	Making Seamless Metal Tubes	396	96
552	Rolling Rail-Way Bars	414	113
553	Apparatus for Removing Grain from Harvesters	280	19
554	Breech-Loading Fire-Arm	II, 397	516
555	Steam-Boiler	584	207
556	Grain Harvester	285	24
557	Hydrant	II, 112	316
558	Printing Press	II, 370	502
559	Cloths for Felting Hat Bodies, &c	443	133
560	Journal-Boxes for Railroad-Car Axles	II, 64	287
561	Manufacturing Augers	352	71
562	Automatic Steam-Whistle	608	223
563	Slide Rest	421	116
564	Mortising Machine	II, 188	375
565	Life-Boat	621	232
566	Former for Spiral Springs	423	118
567	Spark Arrester	574	203
568	Converting Reciprocating into Rotary Motion	II, 162	355
569	Mitering-Bench	II, 167	357
570	Machine for Gathering Seeds or Grain in the Field	340	59
571	Wrench	431	122
572	Wind-Wheel	II, 136	337
573	Soldering Wire Ferrules	421	117
574	Stirring Straw and Husk Beds	II, 296	453
575	Forge Fire	366	82
576	Varying the troke of Feeding-Pump for Steam Engines	II, 116	319
577	Wheelwright Machine	II, 232	408
578	Lathe	II, 183	372
579	Axle-boxes for Carriages	II, 60	286
580	Valve Gear of Oscillating Engines	611	226
581	Field-Fence	II, 33	265
582	Grain and Grass Harvester	290	25
583	Door-Spring	363	78
584	Bridge	II, 22	258
585	Machine for Making Carpet Lining	437	123
586	Skates	II, 449	545
587	Fishing-Lead	II, 442	540
588	Machine for Drying Wet Grain, &c	544	185
589	Enclosing Propeller-Shafts in Keels	628	237
590	Loom	458	142
591	Cooking-Range	573	202
592	Waste Attachment to Hydrants	II, 113	317
593	Pressure Bell	II, 300	456
14,594	Door-Fastener	360	75

Digitized by Google

No.	Invention or Discovery.	Text.	Plates.
14,595	Fastening Door-Knobs	361	77
596	Machine for Combing Seed off Broom-Corn	263	5
597	Shot-Gun	II, 414	524
598	Magneto-Electric Machine	II, 7	249
599	Rotary Pump	II, 121	323
600	Sash Fastener	415	111
601	Tempering Furnace	553	190
602	Flood-Gate	II, 111	316
603	Improved Vise	425	119
604	Machine for Planing Felloes	II, 192	379
605	Piston-Valve or Steam-Boiler Regulator	616	228
606	Polishing Leather	II, 278	444
607	Carriage Coupling	II, 73	294
608	Submarine Lantern	571	200
609	Machine for Sifting Coal, &c	574	203
610	Extracting Oil from Cotton Seed	521	--------
611	Slide-Valves and means for operating them	617	230
612	Machine for Tapering Whalebone	II, 452	547
613	Machines for Mixing Lime and Sand	II, 260	437
614	Construction of Envelopes	II, 337	480
615	[Number altered to 14,896.]	--------	--------
616	Lock	382	90
617	Automatic Thermo-Hydro-Olaiso-Pneumatic Valve	II, 125	326
618	Door Lock	387	94
619	Charring Wood	537	182
620	Governor Valve for Steam-Engines	611	226
621	Felt Guide of Paper Machines	470	150
622	Boiler for Cooking by Steam	542	184
623	Treating Surface Springs	II, 124	325
624	Slate-Frame	II, 449	545
625	Machine for Making Envelopes	II, 338	479
626	Regulating Pumps by Wind-Wheels	II, 121	323
627	Valves for Hydraulic Engines	II, 126	326
628	Basin Cock	II, 102	312
629	Machine for Sowing Seed Broadcast	342	65
630	Machine for Sowing Seed Broadcast	343	66
631	Corn Planter	307	39
632	Chuck for Lathes	II, 185	374
633	Machine for Polishing Buckles	357	75
634	[Number altered to 15,046.]	--------	--------
635	Spoke Shave	II, 224	401
636	Machine for Bending Wood	II, 235	409
637	Core-Bar for Pipe Moulding	397	109
638	Wash Board	II, 325	469
639	Boxes for Axles	II, 62	286
640	Railroad-Car Brakes	II, 66	288
641	Oil Can	536	182
642	Apparatus for Heating and Ventilating	559	195
643	Machine for Making Envelopes	II, 337	478
644	Power Loom	467	143
645	Calendar Clock	II, 2	245
646	Mechanism by which Cattle Raise Water for Themselves	II, 126	327
647	Securing and Releasing Blocks of Lasts	II, 183	370
648	Coal Stove	578	205
649	Operating Cut-Off Valves of Steam-Engines	614	228
650	Arrangement of Grates and Dampers for Chimneys	541	183
651	Stump Extractor	II, 52	280
652	Omnibus Register	II, 90	304
653	Attaching Thills and Poles to Vehicles	II, 95	306
654	Mode of Protecting Vines	349	70
14,655	Frames for Mosquito Nets	II, 447	544

Digitized by Google

No.	Invention or Discovery.	Text.	Plates.
14,656	Straining Marble-Saws	II, 262	433
657	Manufacture of India Rubber	514	--------
658	Machine for Sawing Marble in Obelisk Form	II, 253	423
659	Spreading-Rollers for Stretching Cloth	438	128
660	Bedstead Fastenings	II, 296	454
661	Grain and Grass Harvesters	290	27
662	Candle-Cutting Apparatus	498	166
663	Hay and Cotton Presses	II, 145	342
664	Electric Telegraph	II, 13	253
665	Safety Platforms between Railroad Cars	II, 83	299
666	Hoisting-Drums	II, 142	340
667	Fire-Arms	II, 387	513
668	Metallic Bedsteads	II, 298	455
669	Whip-Sockets	II, 453	547
670	Stereoscope Case	II, 380	509
671	Apparatus for Hoisting Coal	II, 141	340
672	Double-Acting Catch for Reversible Backs of Settees	II, 321	467
673	Implement for Reaping Rice	335	63
674	Apparatus for Feeding Furnaces	554	190
675	Lock Hasp	381	89
676	Floor Clamp	II, 173	362
677	Churn	259	2
678	Wheel-Hub	II, 457	303
679	Oil Ground to receive Photographic Impressions	II. 358	--------
680	Vault Cover	II, 56	285
681	Railroad Brake	II, 65	288
682	Electro-Magnetic Engine	II, 6	248
683	Wig	II, 433	--------
684	Stone and Marble Saw	II. 262	434
685	Apparatus for Teaching Phrenology	II, 448	544
686	Door Spring	362	76
687	Grain Weighing-Machine	II, 150	345
688	Adjusting the Angle in Machines for Sawing Marble Obelisks	II, 255	427
689	Hanging and Elevating or Depressing Farm-Gates	II, 37	269
690	Air Engine	II, 104	313
691	Door-Spring	362	77
692	Diaphragm Fluid Metre	II. 109	314
693	Harvester Raking Attachment	272	13
694	Grain and Grass-Harvester	290	27
695	Repairing Railroad Bars	353	72
696	Making Brass Kettles	377	86
697	Machine for Folding Paper	II, 349	489
698	Machine for Raising and Creasing Leather Straps, &c.	II, 280	445
699	Cut-Off for Steam-Engines	597	217
700	Head and Tail Blocks for Saw Mills	II, 207	389
701	Puddle-Ball Squeezer	412	110
702	Weighing-Scales	II, 148	344
703	Seeding-Machines	338	61
704	Awl Haft	352	71
705	Adjusting Circular Saws for Concave and Convex Work	II, 210	391
706	Fishing Tackle	II, 442	540
707	Seeding Machine	338	64
708	Machine for Sowing Fertilizers	268	10
709	Balance and Slide Valve for Steam Engines	609	224
710	Revolving Fire-Arm	II, 411	521
711	Receiving Magnet for Telegraphs	II, 18	255
712	Waste Device for Hydrants	II, 113	318
713	Brick-Machine	II, 239	413
714	Door-Lock	388	90
715	Cultivator	267	9
14,716	Machine for Digging Peat	II. 44	274

Digitized by Google

No.	Invention or Discovery.	Text.	Plates.
14,717	Sugar Evaporator	531	179
718	Machine for Driving Spokes	II, 224	401
719	Hotel Annunciator	II, 434	536
720	Damper for Cooking-Stoves	580	206
721	Steam-Boiler	584	208
722	Preparing Phosphoric Acid	495	--------
723	Suspending Extra Topsail Yards	630	238
724	Flask for Moulding	397	109
725	Cotton-Cleaner	438	127
726	Sub-soil Plough	319	44
727	Hydro-carbon Vapor Lamp	566	198
728	[Number altered to 15,142.]	--------	--------
729	Machine for Sawing Marble in Obelisk Form	II, 253	425
730	Corn Harvester	282	22
731	Electro-Magnetic Printing Telegraph	II, 17	256
732	Coal-Breaker	II, 440	539
733	Electro-Magnetic Scales	II, 146	344
734	Measuring-Faucet	II, 106	313
735	Apparatus for Raising and Lowering Carriage Tops	II, 78	297
736	Cast-Iron Pavement	II, 43	273
737	Gas-Burner	555	191
738	Working in Sheet Metal	394	86
739	Ring to Prevent Nocturnal Emissions	II, 421	528
740	Conical Tent	II, 450	545
741	Fastening Lamps to Lanterns	570	200
742	Projectile for Fire-Arms	II, 405	525
743	Pressure-regulating Apparatus for Boilers	560	195
744	Weather-Strip and Lock for Windows, &c	II, 58	284
745	Corn-Sheller	263	5
746	Loom for Weaving Bags	463	145
747	Divided Axle for Railroad Cars	II, 63	287
748	Coffee-Pot	II, 310	460
749	Completing the Throw of the Valves of Direct-Acting Engines by the Exhaust Steam	615	227
750	Link Gearing for Horse-Powers	II, 155	349
751	Device to allow for Contraction and Expansion in Wire Fences	528	121
752	Auger	II, 165	356
753	Hoop-Machine	II, 179	369
754	Combined Shovel and Tongs	574	202
755	Machine for Tunnelling and Quarrying	II, 54	281
756	Stud for Wearing Apparel	II, 432	534
757	Sawing-Machine	II, 200	384
758	Chain-Cable Hooks	624	234
759	Electro-Magnetic Printing Telegraph	II, 17	255
760	Pen and Pencil Case	II, 353	491
761	Cradling-Harvester	284	23
762	Machine for Excavating and Moving Earth	II, 29	264
763	Cigar-Machine	II, 439	539
764	Scaffolding	II, 47	277
765	Shingle-Machine	II, 219	398
766	Joint-Bodied Buggy	II, 69	290
767	Hand Seed-Planter	314	44
768	Attaching Harvester Cutter-Blades to the Sickle-Bar	269	10
769	Automatic Rake for Harvesters	280	20
770	Construction of Dry Gas-Meters	557	193
771	Corn-Sheller	264	4
772	Machine for Printing Woollen and other Fabrics	II, 378	508
773	Door-Fastener	360	77
774	Fire-Arm	II, 388	512
775	Machine for Paring Apples	II, 292	450
14,776	Corn-Planter	308	49

Digitized by Google

No.	Invention or Discovery.	Text.	Plates.
14,777	Harvester-Cutter	270	11
778	Rotary Steam-Engine	599	218
779	Wrench	430	122
780	Breech-Loading Fire-Arm	II, 397	517
781	Reaping-Machine	334	54
782	Machine for manufacturing Friction-Matches	II, 446	542
783	Box-Opener	II, 438	538
784	Self-Raker for Harvesters	295	34
785	Corn Planter	308	40
786	Propelling Boat	628	237
787	Lathe	II, 184	373
788	Machine for Cleaning Knives	II, 315	464
789	Machine for Embossing and Printing	II. 368	498
790	Harvester Fingers	270	11
791	Apparatus for Lubricating Grist-Mill Spindles	516	174
792	Rotary Shingle Machine	II, 222	398
793	Guide or Chute for Turbine-Wheels	II, 132	330
794	Wagon Tongue	II, 99	309
795	Improved Vise	425	120
796	Self-Heating Smoothing Iron	II, 322	468
797	Lubricator	518	175
798	Double-Panel Shutter	II, 49	278
799	Pegging-Jack	II, 285	447
800	Machine for Paring Apples	II, 292	450
801	Corn Planter	308	40
802	Machine for Sawing Felloes	II, 87	303
803	Mould-Press for Horse-Collars	II, 275	442
804	Making Paper from Straw	469	--------
805	Hydrant	II, 112	316
806	Lard-Lamp	567	198
807	Machine for Splitting Wood	II, 237	410
808	Self-Regulating Wind-Mill	II, 135	335
809	Road-Scraper	II, 48	276
810	Potato-Digger	326	53
811	Preparing Elastic India-Rubber Cloth	513	--------
812	Bagasse Furnace	549	188
813	Salt Evaporator	528	178
814	Making Gum-Elastic Cloth	510	172
815	Manufacturing Felted Yarns	494	164
816	Machine for Saving Clover-Seed	262	4
817	Dumping-Scraper	II, 48	276
818	Washing-Machine	II, 327	471
819	Breech-Loading Gun	II, 412	524
820	Repeating Fire-Arm	II, 406	520
821	Machines for Figuring and Polishing Morocco	II, 281	445
822	Gas-Burner	555	191
823	Machine for Sawing Marble in Kerfs of Varying Angles	II, 260	432
824	Preparing Artificial Stone	II, 262	--------
825	Oven	571	201
826	Hanging Gates, Doors, &c	II, 36	270
827	Furnace for Smelting Iron	375	85
828	Cooking Apparatus	542	183
829	Machine for Manufacturing Barrel-Heads	II, 165	356
830	Machine for Extracting Stumps	II, 52	280
831	Extension Wagon	II, 98	309
832	Composition for Stuffing Leather	503	--------
833	Hoop Machine	II, 179	369
834	Door-Fastener	359	78
835	Heating Feed-Water Apparatus for Steam Boilers	589	211
836	Construction of Artificial Legs	II, 424	528
837	Machine for Sowing Seed Broadcast	343	64
14,838	Ladling Molten Glass	II, 250	421

Digitized by Google

No.	Invention or Discovery.	Text.	Plates.
14,839	Marble-Sawing Machine	II, 256	428
840	Sheep-Shears	342	59
841	Railroad-Car Seat	II, 71	291
842	Scythe Fastening	336	57
843	Propellers for Life-Boats	622	233
844	Saw-Mill Dog	II, 205	388
845	Machinery for Felting Hat-Bodies	444	131
846	Manufacture of Machine Bricks	II, 247	417
847	Riffle for Gold Washing	369	83
848	Lock	383	92
849	[Number altered to 15,724.]		
850	Cartridge Opener	II, 384	512
851	Farm-Gate	II, 35	270
852	Horse-Shoe	372	83
853	Surgical Splints	II, 425	530
854	Continuous Sheet-Metal Surface	II, 41	273
855	Machine for Cutting Green Corn from the Cobs	II, 311	462
856	Bridle-Bit	II, 274	442
857	Self-Counting Measure	II, 7	249
858	Machinery for Trebling Single Thread	489	163
859	Machine for Dressing Mill Stones	II, 161	353
860	Bow for Violins	II, 381	509
861	Self-Raking Attachment to Harvesters	295	32
862	Hat-Felting Machine	450	134
863	Hand-Saw	II, 199	383
864	Husking-Thimble	302	35
865	Winnowing-Mill	349	69
866	Punching-Machine	413	110
867	Port-Monnaie	II, 363	494
868	Lock-Joint for Railroad-Bars	II, 45	276
869	Machinery for Manufacturing Wash-Boards	II, 326	470
870	Compound Rail for Railroads	II, 45	276
871	Securing Knives to Cutter-Heads	II, 181	369
872	Invalid-Chair	II, 306	459
873	Brick-Machine	II, 239	414
874	Mowing-Machine	305	39
875	Blow-Pipe	534	181
876	Fastening Bits	353	72
877	Portable-Chair	II, 307	459
878	Working Sheet Metal	394	98
879	Wardrobe Trunk	II, 289	449
880	Planing-Machine	II, 193	378
881	File-Cutting Machine	364	79
882	Reacting Water-Wheel	II, 130	328
883	Brooms and Brushes	II, 301	456
884	Cattle Pump	II, 116	319
885	Apparatus for Heating Buildings by Steam	562	196
886	Snow-Plough for Railroads	II, 46	275
887	Making Brass Kettles	377	87
888	Gas-Stoves	581	206
889	Machine for Preparing Dough for Crackers	II, 311	462
890	Chairs for Ships' Cabins	II, 306	458
891	Fire and Escape Ladder	603	220
892	Furnace for Heating Soldering-Irons	550	188
893	Gas-Regulator	558	194
894	Seed Machine	338	66
895	Oven of Cooking Range	573	201
896	Lock	383	92
897	Rolling File Blanks	414	111
898	Mowing Machine	304	39
899	Cutter-Head for Lathes	II, 186	370
14,900	Frame for Travelling Bags and Mail Pouches	II, 435	536

Digitized by Google

No.	Invention or discovery.	Text.	Plates.
14,901	Machine for Cutting Meat	II, 316	464
902	Water-Closet	II, 25	260
903	Boat-Framer	621	232
904	Pill-Machine	II, 448	544
905	Fire-Arm	II, 388	513
906	Supplemental Valves for High-Pressure Engines	620	231
907	Printing Machine	II, 367	500
908	Annealing Furnace	547	187
909	Operating Saw-Mill Blocks	II, 205	388
910	Oracular Wheel or Centre-Table	II, 447	544
911	Artificial Decoloring Compound	504	--------
912	Swing Bolt for Fastening Shutters	421	116
913	Gas-Retort Fastenings	510	171
914	Shingle Machine	II, 219	398
915	Horse-Shoe	372	82
916	Working in Sheet Metal	394	99
917	Telegraph	II, 15	252
918	Regulating Wind-Mills	II, 135	336
919	Printing Machine	II, 366	499
920	Feathering Paddle-Wheels	627	236
921	Water Metre	II, 127	327
922	Hydraulic Engine	II, 104	312
923	Surface Condensers for Steam Engines	601	219
924	Tooth-Extractor	II, 427	532
925	Ash-Leaching Apparatus	497	166
926	Construction of Gas-Generators	508	170
927	Elevator for Cotton, Sugar-Cane, &c.	II, 141	339
928	Floating Draw-Bridge	II, 21	258
929	Lining Metal Pipes with Gutta Percha	513	173
930	Hanging Reciprocating Saws	II, 216	395
931	Carriage-Shaft Coupling	II, 75	296
932	Surface Condenser for Steam Engines	601	219
933	Excavating-Scoop	II, 30	265
934	Gas-Retort Cleaner	509	171
935	Music-Rack	II, 346	485
936	Saw-Set	II, 211	392
937	Extracting Stumps	II, 52	281
938	Machinery for making Rope and Cordage	472	143
939	Weighing Cart	II, 150	345
940	Ventilating Registers and Dampers for Stoves	582	206
941	Lathe Attachment for Turning Irregular Forms	II, 185	373
942	Locomotive and Railroad Lamp	568	199
943	Operating Head-Blocks of Saw-Mills	II, 207	390
944	Operating Steam-Stamps	608	223
945	Car-Window	II, 84	300
946	Photographic Pictures on Glass	II, 359	--------
947	Brick-Machine	II, 240	412
948	Attachment for Piano-Legs	II, 361	493
949	Breech-Loading Fire-Arm	II, 398	516
950	Grinding Circular Saws	II, 209	390
951	Boot-Tree	II, 274	441
952	Constructing Portable Houses	II, 41	272
953	Securing Nuts to Carriage Axles	II, 62	286
954	Engine Governor for Ocean Steamers	592	213
955	Reed Musical Instrument	II, 345	483
956	Case for Sewing Machines	486	161
957	Guard for Circular Saws	II, 209	391
958	Lock and Key	380	88
959	Float for Steam Boilers	588	210
960	Machine for Sizing Hat-Bodies	448	133
961	Mowing Machines	304	38
14,962	Operating the Valves of Steam Hydrants	II, 113	317

Digitized by Google

No.	Invention or Discovery.	Text.	Plates.
14,963	Safety Valve for Steam Engines	617	230
964	Billiard Cue	II, 435	536
965	Cotton-Gin	439	127
966	Excavator	II, 31	263
967	Instantaneous Governor for Steam Engines, &c.	598	214
968	Tool for Boring Hubs	II, 170	361
969	Winding Thread from Skeins	489	163
970	Musical Notation	II, 345	483
971	Loom	459	146
972	Apparatus for Cleaning Gutta Percha	511	172
973	Hand Propeller	628	237
974	Self-Sealing Preserve Vessel	II, 319	466
975	Rotary Knitting Machine	457	141
976	Making Steel	423	--------
977	Shingle Machine	II, 219	399
978	Valve Gear for Steam Engines	610	224, 225
979	Securing Plane-Bits	II, 190	377
980	Grain and Grass-Harvester	291	25
981	Replaceable Axle-Box for Railroad Cars	II, 82	299
982	Drawing Fluids from Bottles	II, 109	314
983	Ship's Capstan	632	239
984	Callipers for Measuring Irregular Forms	II, 172	361
985	Coupling for Vehicles	II, 85	301
986	Ship's Capstan	632	240
987	Machine for Manufacturing Felloes	II, 175	365
988	Self-Acting Mule	468	162
989	Plough	321	50
990	Corn-Sheller	264	6
991	Operating Slide-Valves for Steam-Engines	618	231
992	Parlor Organ	II, 346	484
993	Uterine Supporter	II, 429	532
994	Gas-Burning Lamp	566	198
995	Marble-Sawing Machine	II, 259	430
996	Feeding Apparatus for Gas-Retorts	510	172
997	Regulating Wind-Mills	II, 135	336
998	Piano-Forte Action	II, 360	493
999	Relieving Slide-Valves from the Pressure of Steam	619	227
15,000	Window Frame	II, 58	284
001	Nut-Machine	401	--------
002	Device for Preventing Damage to Goods by Water in case of Fires	II, 24	259
003	Making Nuts	403	102
004	Machine for Polishing Metallic Nuts	403	106
005	Rotary Brick-Machine	II, 244	416
006	Needles for Knitting-Machines	457	138
007	Saw-Set	II, 212	394
008	Machine for Felting Hat-Bodies	448	135
009	Gas-Consuming Furnace	550	189
010	Arrangement of Gas-Retort Bench	509	171
011	Copying Press	II, 363	494
012	Sawing-Machine	II, 201	384
013	Harvester-Frame	271	12
014	Melodeon	II, 342	480
015	Marble-Sawing Machine	II, 257	429
016	Wool Carding Machine	436	126
017	Self-Registering Ship's Compass	II, 3	246
018	Glass-Furnace	551	189
019	Melodeon	II, 341	480
020	Sewing-Machine	487	159
021	Elastic Bottoms for Chairs, &c.	II, 305	458
022	Boring-Machine	II, 171	360
15,023	Cooking-Stove	579	20

Digitized by Google

No.	Invention or Discovery.	Text.	Plates.
15,024	Marble-Sawing Machine	II, 257	427
025	Operating Valves of Steam-Engines	616	229, 230
026	Sawing-Machine	II, 200	385
027	Filter	II, 107	314
028	Gas-Regulator	559	194
029	Grain and Grass-Harvester	291	28
030	Attaching Stem to a Conical Valve	II, 125	326
031	Lock	378	87
032	Fire-Arm	II, 389	515
033	Washing-Machine	II, 328	470
034	Washing-Machine	II, 328	470
035	Hand Corn-Planter	312	48
036	Elastic Bearings for Railroad Chairs	II, 91	304
037	Amalgamator	350	71
038	Railroad-Car Brake	II, 68	290
039	Sub-soil Plough	325	52
040	Parallactic Instrument for Measuring Distances	II, 8	249
041	Fire-Arm	II, 389	513
042	Apparatus for Rolling and Handling Barrels, &c.	II, 435	536
043	Washing-Machine	II, 328	472
044	Reaping-Machine	334	61
045	Revolving Last-Holder	II, 182	370
046	Machine for Raking and Loading Hay	331	60
047	Machine for Husking Corn	300	34
048	Lattice-Bridge	II, 23	259
049	Driving Wheels for Steam-Drags and Propellers	II, 100	310
050	Steam Land-Propeller	II, 91	305
051	Vise	426	120
052	Making Screws	418	114
053	Mitre-Box	II, 187	374
054	Nail-Machine	398	105
055	Hand Pegging Machine	II, 283	446
056	Hydro-Steam Engine	593	213
057	Harness Trace-Coupling	II, 277	443
058	Steam-Pressure Gauge	606	222
059	Rotary Pump	II, 122	324
060	Cutting Flour-Mill	II, 157	350
061	Machine for manufacturing Reed-Boards for Melodeons	II, 343	482
062	Operating Head-Blocks for Saw-Mills	II, 208	390
063	Water-Proof Percussion Caps	II, 415	--------
064	Shutter-Operator	419	115
065	Machine for Coating Cloth with Paint	II, 347	484
066	Machine for Polishing Painted Cloth	II, 347	485
067	Cleaning India-Rubber	513	173
068	Pocket-Book	II, 362	493
069	Shears for Sheet Metal	393	97
070	Effecting Uniform Pressure upon the Pumping Piston of Double-Acting Steam Pumps	II, 120	322
071	Three-wheeled Carriage for Children	II, 77	296
072	Breech-Loading Fire-Arm	II, 398	517
073	Tool for Watchmakers	II, 382	510
074	Threshing Machine	349	70
075	Sabot for Rotating Shot and Shell	II, 419	527
076	Bedstead	II, 297	454
077	Attaching Pads to Saddle-Trees	II, 284	448
078	Operating Head-Blocks of Sawing-Machines	II, 203	387
079	Wheelwright's Machinery	II, 234	407
080	Die-Stock for Cutting Screws	359	76
081	Rotary Shingle Machine	II, 220	400
082	Repairing Circular Saw Teeth	II, 217	396
083	Ice-Cream Freezer	II, 314	463
15,084	Attaching Teeth to Sickle-Bars of Harvesters	296	33

Digitized by Google

No.	Invention or Discovery.	Text.	Plates.
15,085	Sounding Whistles for Fog-Signals	636	242
086	Mandrel for making Gutta-Percha Tubing	513	173
087	Feed Apparatus for working Gutta-Percha	512	173
088	Hermetically Sealing Preserve-Cans	II, 302	457
089	Applying Horse Power to Fire-Engines	545	186
090	Safe for Ships and other Vessels	631	238
091	Machine for Sticking Pins	408	107
092	Constructing Railroad Car-Wheels	II, 101	311
093	Register and Ventilator	573	202
094	Bolt for Shutters	420	116
095	Governor for Steam Engines	598	216
096	Reaping and Mowing Machine	332	61
097	Carriage	II, 73	294
098	Apparatus for Cutting the Strings that secure Corks in Bottles	II, 436	537
099	Platform-Supporter	II, 45	275
100	Potato-Digger	326	53
101	Seed-Planter	316	44
102	Rotary Excavator	II, 30	263
103	Attaching Horses to Shafts of Vehicles	II, 96	308
104	Seeding-Machine	338	64
105	Corn-Sheller	264	6
106	Seed-Planter	317	47
107	Machine for Stuffing Horse-Collars	II, 275	442
108	Straw-Cutter	345	63
109	Casting Car-Wheels	II, 99	310
110	Repeating Fire-Arm	II, 407	522
111	Japanning Pins	407	109
112	Machine for Sticking Pins	409	107
113	Metal Beams	389	94
114	Hand Corn-Planter	313	43
115	Marble-Sawing Machine	II, 257	427
116	Machine for Threshing and Winnowing Grain	347	69
117	Machine for Counting Coin	II, 4	247
118	Machine for Bending Hay-Forks	367	81
119	Saw-Set	II, 212	395
120	Safety-Valve	617	230
121	Making Sheets of Leather from Curriers' Shavings	II, 278	--------
122	Differential Governor for Marine and other Engines	594	214
123	Ship's Capstan and Windlass	633	240
124	Lock	384	91
125	Strapping Tackle-Blocks	637	242
126	Carriage-Spring	II, 76	295
127	Silver Plate Cake and Fruit Basket	II, 295	453
128	Molasses Pitcher	II, 318	465
129	Devices in Planing Machines	II, 195	381
130	Mechanism for Adjusting Circular Saws obliquely to their Arbors	II, 209	391
131	Brush for Cleaning Travellers	488	161
132	Refrigerator	II, 319	466
133	Machine for Paring Apples	II, 292	451
134	Valve for Double-Acting Pumps	II, 121	323
135	Brick-Press	II, 246	418
136	Door-Lock	380	87
137	Plough	321	48
138	Feeder for Roller Cotton-Gins	442	129
139	Adjustable Punch for Setting Artificial Teeth	II, 427	532
140	Odometer	II, 9	250
141	Cartridges	II, 385	512
142	Non-Elastic Bands for Bales of Cotton and other Fibrous Materials	II, 139	339
15,143	Smoothing-Iron	II, 321	467

Digitized by Google

No.	Invention or Discovery.	Text.	Plates.
15,144	Fire-Arm	II, 390	514
145	Clutch for Flour-Packer	II, 143	341
146	Harvester	274	14
147	Auger-Handle	351	71
148	Machine for Paring Apples	II, 293	451
149	Feathering Paddle-Wheels	627	236
150	Port-Folio	II, 362	494
151	Revolving Harrow	268	11
152	Corn-Harvester	283	23
153	Operating Cutters in their Heads for Irregular Forms	II, 177	367
154	Machine for Sizing Hat-Bodies	449	132
155	Coal-Heating Baker	534	181
156	Water-Heater surrounding Fire-Pots of Cooking Apparatus	542	184
157	Pre-Tanning Composition	II, 288	--------
158	Saponifying Fats	506	--------
159	Welding Iron Plates	375	85
160	Mowing Machine	305	38
161	Composition for Working Steel	503	--------
162	Reflecting Quadrant	II, 11	251
163	Self-Setting Saw	II, 198	382
164	Printing Instruments for the Blind	II, 366	498
165	Smoothing Iron	II, 322	467
166	Hemp-Brake	453	137
167	Fire-Arm	II, 391	514
168	Alarm Lock	379	88
169	Securing Shafts to Axles	II, 63	287
170	Vise	426	119
171	Lime and Guano Spreader	344	67
172	Locomotive Lamp	567	199
173	Rotary Pump	II, 117	320
174	Reaper	331	56
175	Water-Wheel	II, 129	330
176	Shoemakers' Edge-Plane	II, 285	448
177	Cooling and Drawing Fluids from Casks, &c	II, 110	315
178	Felling Trees	II, 231	406
179	Detaching Horses from Vehicles	II, 96	307
180	Hanging Grindstones	II, 154	348
181	Adjustable Cut-Off for Steam Engines	595	214
182	Seed-Planter	317	49
183	Plotting-Instrument	II, 11	251
184	Wrench for Gas-Pipe	431	122
185	Envelope	II, 336	480
186	Loom	460	144
187	Attachment to Ice-Boats	622	232
188	Portable Field-Fence	II, 33	266
189	Running-Gear of Carriages	II, 76	295
190	Tool for Cutting Metals	396	97
191	Running Gear of Vehicles	II, 96	307
192	Tubular Elastic Valve	II, 125	326
193	Self-Regulating Wind-Wheel	II, 137	338
194	Hand Seeding-Machine	336	57
195	Machine for making Rake-Teeth	424	118
196	Turning Tapering Forms	II, 178	368
197	Pug-Mill for mixing Clay	II, 248	419
198	Fountain Lamp	565	198
199	Washing-Machine	II, 328	472
200	Tidal Alarm-Buoy	624	234
201	Safety-Hatch for Warehouses	II, 41	272
202	Fire-Arm	II, 391	514
203	Dividing Shoe for Mowing Machines	306	41
204	Harvester	275	15
15,205	Cutting Apparatus for Harvesters	284	21

Digitized by Google

No.	Invention or Discovery.	Text.	Plates.
15,206	Safety-Can for Burning-Fluids	537	182
207	Operating Cut-Off Valves for Steam-Engines	613	227
208	Cut-Off Valve-Check for Steam-Engines	609	224
209	Spring-Bottom for Bedsteads	II, 299	456
210	Grain Drill	267	10
211	Operating Steam-Valves of Steam-Pumps	II, 123	324
212	Shield to Protect Breastpins	II, 335	475
213	Farm Gate	II, 36	269
214	Securing Tire on Wheels	II, 94	306
215	Dental Forceps	II, 422	529
216	Machine for Sawing Felloes	II, 199	383
217	Brake for Wagons	II, 65	288
218	Melodeon	II, 342	481
219	Machine for Reaming and Tapping Gas-Fittings	556	192
220	Framing and Straining Wood-Saws	II, 217	396
221	Rotary Pump	II, 122	324
222	Concentrating Apparatus for Sulphuric Acid	495	166
223	Metallic Pen	II, 356	491
224	Machine for Cutting and Coring Apples	II, 290	451
225	Base-Piece of Locomotive Smoke-Stacks	606	222
226	Metallic Hook for Labels	II, 444	541
227	Operating Valves of Steam-Pumps	II, 123	325
228	Making Boxes of Paper Pulp	II, 352	486
229	Steam-Pressure Regulator	607	223
230	Machine for Sawing Stone	II, 261	433,434
231	Refrigerating Pitcher	II, 319	466
232	Paper-Clip	II, 348	486
233	Turning Carriage, &c., Axletrees	II, 72	292
234	Adjusting Carriage Springs	II, 76	295
235	Bedstead	II, 297	455
236	Harvester	275	15
237	Raking Attachment to Reapers	330	59
238	Match-Machine	II, 447	543
239	Lock	384	93
240	Breech-Loading Fire-Arm	II, 399	518
241	Machine for Grinding Butt Hinges	371	83
242	Marble-Sawing Machine	II, 257	428
243	Disinfecting Pastiles	523	--------
244	Gun-Carriage	II, 413	523
245	Netting Machine	469	158
246	Steam-Gauge	606	222
247	Brass-Kettle Machine	376	86
248	Machine for Mincing Meat	II, 316	464
249	Bedstead	II, 296	453
250	Swinging Spout for Feeding Mill-Stones	II, 162	353
251	Independent Seconds Movement for Watches	II, 19	254
252	Reaping and Mowing Machine	333	55
253	Machine for Sweeping Streets	II, 51	279
254	Machine for Making and Kneading Dough	II, 313	462
255	Corn and Cob Mill	II, 156	350
256	Balance-Gate for Flumes in Water-Power	II, 111	315
257	Blasting-Powder	II, 20	--------
258	Curtain Fixtures	II, 312	461
259	Steam-Pressure Indicator and Regulator	607	223
260	Cotton-Seed Planter	311	43
261	Machinery for Felting Hat-Bodies	445	131
262	Magazine Hammer for Fire-Arms	II, 403	519
263	Filter Attachment for Faucets	II, 107	314
264	Guard-Finger for Harvesters	292	30
265	Machines for Mowing Grass and Cutting Grain	303	38
15,266	Maccaroni Server	II, 316	464

Digitized by Google

No.	Invention or Discovery.	Text.	Plates.
15,267	Dry-Lime Gas Purifier	508	170
268	Machinery for Combing Wool	493	165
269	Machine for Hulling and Scouring Grain, Seed, &c	299	33
270	Padlock	382	89
271	Method of Extinguishing Fires	546	187
272	Machine for Upsetting Tire	II, 94	306
273	Drawing Water from Wells	II, 131	331
274	Rotary Pump	II, 122	325
275	Roofing-Cement	502	--------
276	Brick-Machine	II, 240	413
277	Vise	426	119
278	Dies for Stamping or Pressing Sheet Metal	359	75
279	Apparatus for Hitching Horses, Clothes-Lines, &c	II, 443	540
280	Rotary Pump	II, 123	324
281	Rotary Steam-Engine	599	217
282	Machine for Rounding and Backing Books	II, 335	476
283	Tool for Index Lettering	II, 341	480
284	Smut-Machine	II, 163	355
285	Stave-Jointer	II, 226	403
286	Securing Pearl Ornaments in Handles of Cast Metal	389	97
287	Shutter Operator	419	115
288	Attaching Shafts to Vehicles	II, 96	307
289	Machine for Quarrying and Cutting Stone	II, 264	434
290	Machinery for Felting Hat-Bodies	445	130
291	Jacquard Loom	463	148
292	Fire-Arm	II, 391	512
293	Brick Machine	II, 237	411
294	Curry-Comb	II, 440	539
295	Loom	460	147
296	Reversible Horse-Power	II, 155	349
297	Wheel for Steam-Carriages	II, 77	296
298	Balancing and Propelling Life and Property Saving Vessels	638	244
299	Stone-Sawing Mill	II, 265	435
300	Apparatus for Raising and Dumping Coal	II, 26	261
301	Dovetailing Machine	II, 174	364
302	Shingle Machine	II, 220	399
303	Tanning Hides	II, 288	--------
304	Guiding Circular and other Saws	II, 208	390
305	Locomotive Reflector Lamp	568	199
306	Horse-Shoe	372	84
307	Breech-Loading Fire-Arm	II, 399	518
308	Brush for Dressing Warps	490	--------
309	Water-Wheel	II, 129	329
310	Turning Machine	II, 231	406
311	Raking Attachment to Harvesters	292	31
312	Hand Printing-Press	II, 376	508
313	Machinery for Cleaning the Top-Flats of Carding Engines	435	124
314	Knitting Machine	454	138
315	Automatic Cannon	II, 383	511
316	Base-Damper for Melodeons, &c	II, 343	483
317	Constructing Dams	II, 27	261
318	Cooking-Stove	579	205
319	Sounding-Guard for Vessels	639	242
320	Straw Cutter	344	67
321	Plough	322	49
322	Corn-Planter	309	41
323	Electro-Magnetic Fog-Bell	625	234
324	Controlling Feed-Water Apparatus for Steam-Boilers	590	211
325	Nutmeg-Grater	II, 314	463
326	Rope Machine	474	141
15,327	Turning Ornamental Forms	II, 178	366

Digitized by Google

No.	Invention or Discovery.	Text.	Plates.
15,328	Marble-Sawing Machine	II, 258	430
329	Machine for Striking Unburnt Bricks	II, 247	418
330	Self-Setting Tail-Block for Sawing Mills	II, 204	386
331	Fire-back of Fire-places	545	185
332	Door-Knob	361	77
333	Straw-Cutter	345	67
334	Cutting Device for Harvesters	II, 454	12
335	Stone-Dressing Machine	II, 263	436
336	Collodion for Photographic Pictures	II, 359	--------
337	Apparatus for Slaughtering Hogs	II, 443	541
338	Frames of Mowing and Reaping Machines	307	42
339	Railroad-Car Wheel	II, 100	311
340	Machine for Composing and Distributing Type	II, 381	510
341	Tinting Photographic Pictures	II, 359	--------
342	Straw-Cutter	344	66
343	Sash-Lock	416	112
344	Ploughs	322	43
345	Three-Wheel Pleasure Carriage	II, 73	293
346	Adjustment of Mill-Stones	II, 160	352
347	Fire-Arms	II, 392	514
348	Making Seamless Metal Tubes	396	97
349	Machine for Threshing and Cleaning Grain in the Field	347	68
350	Cattle Stall	259	1
351	Detachable Shaft-Coupling	II, 87	302
352	Mop-Heads	II, 317	465
353	Washing Machine	II, 326	470
354	Mowing Machines	305	40
355	Car-Coupling	II, 85	301
356	Regulating the Conical Pendulum of Time-Keepers	II, 10	250
357	Charging Cannon	II, 384	512
358	Printers' Composing Stick	II, 364	495
359	Centro-lineads	II, 1	245
360	[Cancelled]	--------	--------
361	Preparing Vegetable Dye-Stuff	505	--------
362	Fenders for Fire-places	545	186
363	Filtering Medium	II, 108	314
364	Lard-Lamps	567	198
365	Cutter-Heads for Planing Machines	II, 195	379
366	Attaching Sleigh-Bells to Straps	II, 449	545
367	Door Knobs	361	76
368	Driving Circular Saws	II, 210	392
369	Fixed Cartridges	II, 386	512
370	Percussion Tube-Primers	II, 415	525
371	Vibratory Steam Engines	602	218
372	Artificial Hands and Arms	II, 423	529
373	Self-Acting Electric Telegraphs	II, 16	254
374	Machine for Moulding and Pressing Building-Blocks from Clay, &c	II, 247	417
375	Machines for Felting Hat-Bodies	445	130
376	Gas Stop-Cocks	510	172
377	Harvester	275	16
378	Fly-Trap	II, 450	446
379	Cutter-Stock Metal Planers	391	98
380	Machine for Sawing Stone or Marble	II, 264	434
381	Cotton-Gin	439	130
382	Polishing Machines	II, 197	382
383	Marble-Sawing Machine	II, 259	432
384	Reacting Water-Wheel	II, 130	329
385	Tapping Fluids under Pressure	II, 110	315
386	Valve for Type-Casting Machines	II, 380	510
15,387	Self-Raker for Harvesters	294	31

Digitized by Google

No.	Invention or Discovery.	Text.	Plates.
15,388	Repeating Fire-Arm	II, 407	520
389	Glass Furnace	552	189
390	Scaffold for Shingling Roofs	II, 47	277
391	Liquid used as a Motive Power	515	--------
392	Riding Saddle	II, 283	446
393	Friction-Match Machine	II, 446	542
394	[Cancelled.]	--------	--------
395	Pendulum Pump for Ships	634	240
396	Sewing Machine	479	157
397	Trigger-Protector for Fire-Arms	II, 411	522
398	Riving equal Pieces from a Block	II, 197	382
399	Machine for Sawing Coopers' Hoops	II, 199	383
400	Relieving Steam Slide-Valves from Pressure	614	226
401	Valves of Accordeons	II, 333	475
402	Folding-Guide of Sewing Machines	486	154
403	Planing Machine	II, 193	380
404	Machine for Sewing Pins upon Paper, &c	410	112
405	Chair	II, 305	458
406	Pegging Jack	II, 282	446
407	Portable Folding Table	II, 324	469
408	Raking Apparatus of Corn and Cane-Harvesters	284	19
409	Cutting Apparatus of Corn and Cane Harvesters	283	22
410	Machine for Sawing Stone in Taper Form	II, 264	432
411	Apparatus for Solar Salt Evaporation	528	178
412	Churn	260	3
413	Metal-Plane	391	99
414	Sawing Machinery	II, 202	387
415	Harness for Weaving Seamless Bags	491	162
416	Shutter Operator	420	116
417	Fountain-Pen	II, 354	491
418	Pyrogenous Lubricating Oil	522	--------
419	Machine for Sawing Marble	II, 260	431
420	Fore-and-aft Rig of Vessels	638	243
421	Sugar Evaporator	532	180
422	Bake-Oven	572	201
423	Stave Machinery	II, 227	402
424	Steam-Boiler Furnace	589	210
425	"Patching" Rifle-Shot	II, 418	--------
426	Corn Planter	309	42
427	Clamp for Plumbers	357	76
428	Portable Printing Press	II, 377	508
429	Stave Machine	II, 227	404
430	Inserting Faucets into Fluids under Pressure	II, 107	314
431	Hand Seed-Planter	314	45
432	Soap-Boiling Apparatus	529	178
433	Potatoe Planter	315	51
434	Coal-Scuttle	II, 27	261
435	Knitting Machine	455	139
436	Machine for Binding Grain, &c	258	1
437	Printing Press	II, 370	496
438	Sawing Machine	II, 201	383
439	Gutta Percha Apparatus for Covering Wire	511	172
440	Pick-Pocket Detector	II, 441	539
441	Carving Wood	II, 235	408
442	Smut-Machine	II, 164	354
443	Machinery for Forming Hat Bodies	445	132
444	Ox Yoke	350	70
445	Turning Ellipsoidal Forms	II, 176	364
446	Machine for Manufacturing Spools	II, 225	402
447	Hanging Window-Sash	II, 59	285
15,448	Apparatus for Purifying White Oxyde of Zinc	533	180

Digitized by Google

No.	Invention or Discovery.	Text.	Plates.
15,449	Clover-Seed Harvester	281	19
450	Sad-Iron Heater	II, 320	466
451	Machine for Cutting out Soles of Boots and Shoes	II, 269	438
452	Apparatus for Smoking Meats	II, 317	465
453	Cultivator	267	9
454	Mould for Hollow Projectiles	II, 417	526
455	Flour Bolt	II, 151	346
456	Face-Plate for Locks	388	94
457	Bee-Hive	257	1
458	Chimney Damper	540	183
459	Faucet	II, 105	313
460	Whiffle-Tree	II, 101	311
461	Whiffle-Tree	II, 102	311
462	Pegging-Jack	II, 281	445
463	Operating Gates for Water-Wheels	II, 130	330
464	Fly-Trap	II, 451	546
465	Weather-Strip for Doors	II, 28	262
466	Reel for Fishing-Rods	II, 442	540
467	Mortising Machine	II, 188	376
468	Spike Machine	422	117
469	Sewing Machine	479	155
470	Sewing Machine	480	157
471	Brick-Press	II, 244	417
472	Ice-Breaking Boat	622	232
473	Attaching and Detaching Boats to and from their Tackle	623	233
474	Water-Closet	II, 57	283
475	Envelope	II, 336	480
476	Sash-Supporter	II, 47	277
477	Printing Press	II, 371	503
478	Carpet Fastening	II, 303	457
479	Metal Pavement	II, 42	273
480	Mechanism for Compressed Air Railroad-Signals	II, 91	305
481	Bagasse Furnaces	550	188
482	Wrench	430	122
483	Breaking Ice	II, 444	542
484	Knitting Machines	456	137
485	Straw Cutters	346	63
486	Blanks for Bank-Notes, Bills, &c	II, 334	--------
487	Guiding Line Ferry-Boats or Flying Bridges	623	232
488	Corn and Cob-Mills	II, 158	351
489	Locks	385	91
490	Pen-Holder	II, 356	491
491	Lightning-Rods	II, 7	248
492	Rotary Knitting Machines	458	140
493	Door-Stay	364	78
494	Heating Feed-Water Apparatus for Steam-Boilers	590	211
495	Combined Steam and Hot-Air Cooking Stove	576	204
496	Breech-Loading Fire-Arms	II, 401	517
497	Coloring Photographic Pictures on Glass	II, 359	--------
498	Hemp-Brakes	453	137
499	Stuffing Leather	II, 280	--------
500	Bolt for Vault and Safe Doors	354	73
501	Securing Types on Rotary Beds	II, 381	510
502	Corn-Sheller	265	6
503	Washing-Machine	II, 326	470
504	Invalid Supporters	II, 426	531
505	Production of Oil from Cannel Coal	521	--------
506	Preparing Oil from Bitumens	520	--------
507	Mowing Machines	306	41
508	Felting Hat-Bodies	443	130
15,509	Odometers	II, 9	250

Digitized by Google

No.	Invention or Discovery.	Text.	Plates.
15,510	Steering-Apparatus	636	242
511	Accordeons	II, 333	475
512	Dies for Screw Planks	358	76
513	Manufacture of Sheet-Metal Ware	397	98
514	Fruit-Box	II, 438	538
515	Nail-Plate Feeding Apparatus	399	103
516	Fire-Arm	II, 393	515
517	Filtering-Sand for Cider	506	--------
518	Raising, Lowering, and Opening Farm-Gates	II, 38	270
519	Coal-Hod	541	183
520	Vehicle for Paint Compounds	504	--------
521	Fire-Arm	II, 392	515
522	Fire-Arm	II, 393	515
523	Sash-Fastener	415	112
524	Gold Washer and Amalgamator	351	71
525	Improved File	365	79
526	Artificial Stone	II, 262	--------
527	Attaching Inkstands to Desks	II, 340	477
528	Spring-Pulley for Window-Sashes	II, 59	284
529	Machine for Throwing Projectiles	II, 418	526
530	Manufacturing Chairs	II, 172	361
531	Treating India-Rubber	515	--------
532	Lettering and Ornamenting Glass	II, 339	--------
533	Corn Harvester	283	22
534	Manufacture of Hat-Bodies	449	135
535	Spinning Frame	487	160
536	Chimney Cowl	538	182
537	Extracting Stumps	II, 53	281
538	Planing Metal	392	96
539	Valve-Gear for Steam-Hammers	603	220
540	Rock-Drill	II, 248	419
541	Blast-Furnace	368	80
542	Processes for Separating Silver from the Ore	525	177
543	Machine for Wringing Clothes	II, 309	460
544	Ore Washer	404	105
545	Refrigerator	II, 320	466
546	Brick-Machine	II, 241	414
547	Vapor-Burning Lamp	569	199
548	Mould for Pressing Glass Fountain Lamps	II, 250	420
549	Lime-Kiln	II, 251	422
550	Furniture Polish	II, 314	--------
551	Blastic Compound	503	--------
552	Bedstead	II, 298	455
553	Concentration of Milk	519	176
554	Wheel for Carriages	II, 100	311
555	Door-Spring	363	78
556	Carpenter's Gauge	II, 179	367
557	Sash-Supporter	II, 47	277
558	Clamping and Upsetting Tire	II, 93	306
559	Regulating Velocity of Feed for Sawing-Mills	II, 203	386
560	Coupling Pipes	358	74
561	Farm-Fence for Rolling Ground	II, 32	266
562	Knife-Cleaner	II, 315	464
563	Felting Compound	504	--------
564	Paddle-Wheel	626	236
565	Machine for Adding Numbers	II, 1	245
566	Machine for Sweeping Gutters	II, 53	281
567	Thorough-Braces for Carriages	II, 77	296
568	Cupping Instrument	II, 421	528
569	Harvesting Machine	296	33
15,570	Machine for Pressing Bonnets	II, 429	533

Digitized by Google

No.	Invention or Discovery.	Text.	Plates.
15,571	Machine for Forging Horse-Shoe Nails	367	81
572	Tenoning Machine	II, 229	405
573	Bristle-Separator	II, 301	456
574	Hand-Stamp	II, 378	509
575	Cart-Saddle	II, 283	446
576	Valve-Motion for Steam-Engines	612	226
577	Projectile	II, 416	525
578	Window-Sash	II, 58	285
579	Arrangement of Steam Cylinder within the Boiler	586	209
580	Washing Machine	II, 327	473
581	Head-Rest to be used in Railroad Cars	II, 81	299
582	Harvester	275	15
583	Vise	426	121
584	Self-Clearing Chimney Cowl	538	182
585	Water-proofing Textile Fabrics	442	--------
586	Grapple for Raising Sunken Bodies	626	235
587	Apparatus for Boring Artesian Wells	II, 20	257
588	Machine for Swaging Iron	II, 456	85
589	Lock	386	93
590	Frame for Bleaching Ivory	498	166
591	Machine for Drilling and Dressing Stone	II, 263	435
592	Mosquito Canopy	II, 317	465
593	Wheelwright's Machine	II, 233	407
594	Preparing Linseed, &c., for Pressing	526	177
595	Rock-Drill	II, 249	420
596	Magneto-Electro Machine	II, 6	248
597	Applying one Stream of Water to assist in raising another	II, 128	329
598	Apparatus for Evaporating Salt	527	177
599	Wind-Wheel	II, 136	338
600	Instrument for Laying Out Rafters	II, 197	382
601	Hay-Rake	327	55
602	Instrument for Measuring Distances	II, 8	249
603	Apple-Parer	II, 290	450
604	Condenser for Steam-Engines	596	215
605	Self-Adjusting Fog-Bell	625	234
606	Cultivator	267	9
607	Manufacturing Seamless Hosiery	454	138
608	Dynamometer	II, 4	247
609	Bedstead	II, 296	453
610	Hand Seed-Planter	314	46
611	Ball-Caster for Trunks and Furniture	II, 303	457
612	[Number altered to 16,038.]	----------	--------
613	Air-Heating Furnaces	549	188
614	Automatic Attachment to Gas-Burners	555	192
615	Curtain-Fixtures	II, 312	461
616	Hand Corn-Planter	313	44
617	Water-Gauge for Steam-Boilers	590	212
618	Brick-Machine	II, 242	415
619	Amalgamator	350	71
620	Making Lead-Pipe	411	108
621	Bedstead	II, 298	454
622	Fountain-Pen	II, 355	490
623	Machinery for Filling Seine Needles	475	153
624	Bilge and Leakage Water-Indicator	630	238
625	Apple-Parer	II, 290	450
626	Cupping	II, 421	528
627	Machinery for Felting Hat-Bodies	444	129
628	Potato-Digger	326	52
629	Milking Cows	302	36
630	Grain Cleaner and Separator	II, 152	347
15,631	Opening Farm-Gates	II, 38	270

Digitized by Google

No.	Invention or Discovery.	Text.	Plates.
15,632	Brace	II, 456	73
633	Preventing Liquids from Boiling Over	535	181
634	Machine for Sizing Comb-Blanks	II, 431	534
635	Sewing-Machine	480	156
636	Lamp	563	197
637	Calendar-Clock	II, 2	245
638	Harvester	276	16
639	Machine for Feeding Paper to Printing-Presses	II, 376	506
640	Cotton Seed-Planter	311	43
641	Rotary Steam-Engine	600	217
642	Apparatus for Purifying Mineral Coal Oil	522	176
643	Apparatus for Distilling Mineral Coal Oil	520	176
644	Preparation of Drying-Oil from Bituminous Mineral Oil	522	--------
645	Apparatus for Arresting Carbon in Chimneys	540	183
646	Filter	II, 108	314
647	Street-Sprinkler	II, 50	278
648	Bedstead	II, 298	455
649	Plough	323	46
650	Adjustable Cut-Off for Steam-Engines	595	215
651	Charger for Shot-Pouches	II, 420	527
652	Boring and Mortising Hubs	II, 168	358
653	Hay-Rake	328	52
654	Plough	322	50
655	Raking-Attachment for Reapers	332	56
656	Machine for Testing Axes	352	72
657	Fountain Ruling-Pen	II, 355	490
658	Spring-Bedstead	II, 299	455
659	Harvesting-Machine	297	29
660	Pen and Pencil Case	II, 353	491
661	Churn	260	3
662	Ale and Beer Cooler	495	166
663	Condenser for Steam-Engines	596	215
664	Stiffening Hat-Bodies	527	--------
665	Manufacture of Black Bottle Glass	II, 249	--------
666	Buckle for Wearing-Apparel	II, 430	533
667	Rotary Steam-Engine	600	216
668	Candle-Moulding Machine	500	168
669	Harvesting-Machine	297	32
670	Whiffle-Tree for Detaching Horses from Carriages	II, 101	311
671	Buckle for Wearing-Apparel	II, 430	533
672	Grain and Grass-Harvester	291	28
673	Invalid-Chair	II, 306	460
674	Straw-Cutter	346	63
675	Self-Waiting Table	II, 323	468
676	Curtain-Fixture	II, 313	462
677	Cutting-Device for Harvesters	285	22
678	Boring Hubs for Boxes	II, 170	359
679	Saw-Set	II, 212	393
680	Dress of Metallic Hemispherical Grinding-Mill	II, 158	352
681	Lady's Riding Saddle	II, 283	446
682	Breech-Loading Ordnance	II, 414	525
683	Apple-Parer	II, 291	450
684	Washing-Machine	II, 329	472
685	Steam-Engine	595	214
686	Extinguisher for Fluid-Lamps	565	198
687	Repairing Railroad Bars	353	72
688	Artificial Fuel	546	--------
689	Feeding Sawing-Mills	II, 203	387
690	Lubricating Throstle-Spindles	516	175
691	Seed-Planter	317	46
15,692	Attaching Horses to Vehicles	II, 95	307

Digitized by Google

No.	Invention or Discovery.	Text.	Plates.
15,693	Link of Horse-Powers	II, 156	349
694	Pan for Evaporating Sugar	531	179
695	Sewing-Machine	481	153
696	Hand Corn-Planter	313	48
697	Reversing Gear	II, 152	347
698	Metallic Car-Spring	II, 79	297
699	Collision Apparatus for Railroad Cars	II, 80	298
700	Screw-Cutter	417	113
701	Grain and Grass Harvester	271	12
702	Machine for Manufacturing the Wooden Part of Brushes	II, 301	456
703	Process of Manufacturing Delaines	442	--------
704	Hanging Ships' Rudders	634	240
705	Cutting and Drawing Wire	428	121
706	Casting Artificial Tooth Plates by the Electrotype Process	II, 428	532
707	Cartridges	II, 385	512
708	Lock	378	87
709	Wind-Mill	II, 133	332
710	Machine for Sweeping Streets	II, 51	280
711	Washing Machine	II, 329	471
712	Suspending Hydraulic Puppet-Valves	II, 115	318
713	Marble-Sawing Machine	II, 259	431
714	Wind-Mill	II, 133	333
715	Machinery for Forming Hat-Bodies	446	135
716	Drawing from Manufacturing Enclosures Waste Gases, &c.	II, 111	315
717	Jacquard-Loom	464	146
718	Saw-Gummer	II, 198	382
719	Faucet	II, 105	313
720	Shingling Bracket	II, 223	400
721	Harvester	276	16
722	Harvester	277	17
723	Furnace Smoothing-Iron	II, 322	467
724	Lamp for Burning Fluids	565	197
725	Adjusting Carriage-Top	II, 78	297
726	Chimney Cap	537	182
727	Machine for Dressing Felloes	II, 175	366
728	Feed-Motion for Shingle Machines	II, 222	400
729	Heading Bolt	354	73
730	Dentist's Forceps	II, 422	529
731	Saw-Set	II, 213	394
732	Reefing Ships' Sails upon Extra Yards	635	241
733	Granulating Metals	395	96
734	Fire-Arm	II, 393	515
735	Harvester	278	18
736	Preparation of Hides for Tanning	II, 288	--------
737	Attaching Shafts to Sleighs	II, 93	306
738	Machine for Cutting Paper	469	151
739	Carpenter's Bench	II, 166	357
740	Printing-Press	II, 372	501
741	Churn	260	3
742	Locomotive and Steam-Boiler Furnace	582	207
743	Clevis	262	4
744	Riding-Saddle	II, 283	446
745	Variable Cut-Off for Steam Engines	602	219
746	Cotton-Picker	266	9
747	Shingle Machine	II, 221	400
748	Harvesting Machine	297	32
749	Shingle Machine	II, 221	397
750	Construction of Iron Fence Posts and Ties	373	84
751	Self-acting Rake for Harvesters	294	32
752	Fly-Trap	II, 451	546
15,753	Oven	572	201

Digitized by Google

No.	Invention or Discovery.	Text.	Plates.
15,754	Reefing Topsails	629	237
755	Corn Planter	309	40
756	Feeding and Sawing Shingles	II, 222	399
757	Stave-Jointer	II, 225	404
758	Adjusting the Slats of Window-Blinds	II, 57	284
759	Machine for Painting Carriage Wheels	II, 99	310
760	Explosive Shell	II, 419	526
761	Feed-Roller of Straw-Cutters	346	66
762	Metallic Brace for heels of Boots and Shoes	II, 269	438
763	Machine for Manufacturing Bed-Pins	II, 166	357
764	Hand-Stamp	II, 379	509
765	Corn-Sheller	265	7
766	Brick-Machine	II, 242	415
767	Manufacturing Ingrain Carpeting	437	--------
768	Machine for Notching Hoops	II, 181	369
769	Omnibus	II, 90	304
770	Securing Spokes in the Hubs of Wheels	II, 89	303
771	Air Engine	II, 103	312
772	Making Brass Kettles	377	87
773	Machine for Grinding Saws	II, 214	395
774	Blow-Pipe	534	181
775	Lubricator	518	175
776	Cast-Iron Pavement	II, 42	273
777	Hay Rake	328	56
778	Hydraulic Brick-Press	II, 245	413
779	Self-Regulating Draught for Chimney Tops	541	183
780	Hoop Machine	II, 180	368
781	Carding Engine	434	126
782	Lantern	570	200
783	Lock and Freight Car	381	89
784	Carding Engine	434	123
785	Grain Separator	II, 153	348
786	Grain Threshing Machine	347	70
787	Churn	260	3
788	Tool for Forming Grooves around the Orifice of Bottles, &c.	II, 436	537
789	Feather-Edge Gauge	II, 276	442
790	Sawing Machine	II, 202	387
791	Warm-Air Furnace	553	190
792	Machines for Sawing Marble	II, 254	426
793	[Cancelled]	--------	--------
794	Boat-Oar	621	232
795	Belt-Punch	II, 140	339
796	Reaping and Mowing Machine	333	62
797	Fire-Arm	II, 394	515
798	Brick Machine	II, 243	413
799	Gridiron	II, 315	463
800	Lock	386	94
801	Self-Heating Smoothing Iron	II, 322	468
802	Hermetically Sealing Bottles	II, 438	538
803	Steam Boilers	585	208
804	Journal-Box Alloy	496	--------
805	Wind-Mill	II, 134	334
806	Mixing Wheat Flour with Paints	504	--------
807	Machine for Softening Leather	II, 279	444
808	Brick-Machine	II, 243	414
809	Photographic Instruments	II, 358	492
810	Seed Planter	318	44
811	Saw-Gummer	II, 199	383
812	Portable Fence	II, 34	267
813	Excavator	II, 31	264
15,814	Sawing Marble in Taper Form	II, 256	427

Digitized by Google

No.	Invention or Discovery.	Text.	Plates.
15,815	Steam-Wagon	608	223
816	Machine for Finishing Leather	II, 278	443
817	Lubricating the Sheave-Pin of Ships' Blocks	632	239
818	Attaching Hubs to Axles	II, 89	303
819	Cultivator	II, 454	9
820	Locomotive for Roads, &c	604	221
821	Many-Wicked Candle	501	169
822	Seed Planter	317	46
823	Bridge	II, 22	258
824	Tailor's Measure	II, 432	534
825	Steam-Boiler Grate	589	210
826	Trunk	II, 289	449
827	Ore Washer	405	105
828	Putting Pillows and Bolsters into their Cases	II, 318	465
829	Hydro-Carbon Vapor Lamp	566	198
830	Furnace for Zinc White	551	189
831	Artificial Leg	II, 423	529
832	Furnace	549	188
833	Disconnecting Railroad Cars and Applying Brakes	II, 81	299
834	Regulating Valve for Steam-Engines	617	231
835	Machine for Separating Green Corn from the Cob	II, 310	461
836	Dash-Wheel for Washing and Bleaching	432	125
837	Ring-Bolt for Ships' and Boats' Tackle	630	238
838	Soda Fountain	530	179
839	Bumper Arrangement for Uncoupling Railroad Cars	II, 83	301
840	Vegetable-Cutter	II, 324	469
841	Smut-Mill	II, 159	352
842	Machine for Folding Paper	II, 350	491
843	Harvester	278	16
844	Construction of Hide Frames in Tan-Vats	II, 288	447
845	Buoy	624	233
846	Hose Coupling	II, 111	316
847	Machines for Mixing Mortar	II, 261	437
848	Fly-Trap	II, 451	546
849	Attaching Scythes to Snaths	336	57
850	Elastic Plate Paddles for Steam Vessels	640	243
851	Bending Wood	II, 234	408
852	Feeding Pulp to Paper-Making Machines	470	152
853	Measuring Fluids while Drawing	II, 109	315
854	Plate-Holder for Photographic Cameras	II, 358	492
855	Harvester	278	18
856	Machinery for Cleaning Wool	492	163
857	Sash Lock	416	114
858	Glass or Earthen Truss-Pad	II, 429	532
859	Machine for Cutting Irregular Forms	II, 176	365
860	Machine for Finishing Gas-Pipe Fittings	411	110
861	Nut Machine	401	101
862	Vise	427	119
863	Brick-Machine	II, 243	416
864	Bracket for Door-Springs	363	78
865	Hoop-Machine	II, 180	369
866	Pincers for Lasting Boots and Shoes	II, 273	440
867	Cutting Round Files	366	80
868	Mill-Stone Dress	II, 159	352
869	Coil-Spring for Railroad Cars	II, 80	297
870	Regulating the Draught of Steam Boilers	586	209
871	Sticking Pins in Paper	406	106
872	Guide for Working Button Holes	433	125
873	Canal Bridge	II, 21	257
874	Papering Pins	410	108
15,875	Excavator	II, 31	264

Digitized by Google

No.	Invention or Discovery.	Text.	Plates.
15,876	Manure-Distributor	302	35
877	Sticking Pins in Paper	406	108
878	Pump	II. 116	319
879	Grain-Separator	II, 154	347
880	Making Axe-Poles	352	72
881	Opening and Closing Farm-Gates	II, 37	269
882	Harvester	279	17
883	Firemens'-Ladder	II, 445	541
884	Salt-Evaporator	528	178
885	Springs for Side-Spar Wagons	II, 98	308
886	Anti-Friction Bushing for Ships' Blocks	631	239
887	Plough	323	50
888	Pump	II, 118	320
889	Escapement Movement for Automatic Fans	II, 441	540
890	Hanging Reciprocating Saws	II, 216	396
891	Porte-Monnaie	II, 362	494
892	Sawing Stone	II, 265	427
893	Adjustable Stirrup for Saw-Mill Pitman	II, 206	389
894	Bee-Hive	258	1
895	Washing-Machine	II, 329	471
896	Applying Tan-Liquor to Hides	II, 286	--------
897	Uterine Supporter	II, 429	532
898	Submarine Exploring Armor	637	242
899	Machine for Bending Metal-Pipe	391	96
900	Spring Bed-Bottom	II, 295	453
901	Wheelwrights' Machine	II. 233	407
902	Finishing Caster-Wheels for Furniture	II, 304	457
903	Machinery for Forming Hat-Bodies	446	133
904	Manufacturing Cylinders for Cotton-Gins	441	127
905	Card-Teeth for Machine-Cards	437	124
906	Cotton-Gin	440	129
907	Gimlet-Handle	368	80
908	Arrangement of the Thills of Vehicles	II, 95	306
909	Railroad-Car Coupling	II, 70	291
910	Nail-Machine	398	100
911	Fastening Farm-Gates	II, 39	270
912	Machine for Cleaning Emery Wheels	364	79
913	Felling Trees	II, 230	406
914	Brace for Carriage-Springs	II, 76	295
915	Hinge for Picture-Cases	II, 361	--------
916	Chimney Cowl	538	182
917	Grain Threshing and Separating Machine	348	70
918	Cotton-Seed Planter	312	45
919	Apparatus for Cleaning Coulters of Ploughs	324	51
920	Corn-Sheller	265	7
921	Reed for Musical Instruments	II, 345	483
922	Pump	II, 119	320
923	Carriage	II, 74	293
924	Bituminous Ground for Photographic Pictures	II, 358	--------
925	Fire-Arm	II, 394	514
926	Sickle for Harvester	296	34
927	Harvester	279	18
928	Spike-Machine	422	117
929	Sizing Hat-Bodies	450	136
930	Cotton-Gin	440	128
931	Head-Rest for Chairs	II, 306	458
932	Screw-Machine	417	113
933	Ship's Capstan	633	239
934	Preparing Clay for Alum-making	496	--------
935	Cast-Iron Railroad-Car Wheel	II, 100	311
15,936	Cotton-Press	II, 144	342

Digitized by Google

No.	Invention or Discovery.	Text.	Plates.
15,937	Scale for Instrumental Music	II, 345	483
938	Nail-Plate Feeding	398	100
939	Balance and Fastener for Window-Sash	416	112
940	Filing and Setting Saws	II, 214	393
941	Machine for Splitting Mackerel	II, 445	541
942	Lard-Rendering Kettle	515	174
943	Combined Table and Bedstead	II, 323	468
944	Bending Wood	II, 234	409
945	Washing-Machine	II, 330	472
946	Bottle Caster	II, 304	457
947	Making India-Rubber Hose	514	173
948	Machine for Shearing Sheep	341	65
949	Washing-Machine	II, 330	473
950	Process for Silvering Mirrors	525	--------
951	Rosin Soaps	530	--------
952	Cooking-Stove	579	204
953	Process of Coating Metals with Metals	525	--------
954	Capstan for Steam-Boats	623	233
955	Seed-Planter	318	50
956	Stove-Blacking	497	--------
957	Device for Putting up Caustic Alkalies	496	--------
958	Washing-Machine	II, 329	472
959	Dyeing	505	169
960	Puppet-Valve	II, 126	326
961	Machine for Making Brass Kettles	376	85
962	Lock	387	93
963	[Cancelled]	--------	--------
964	Machine for Bending Sheet Metal	393	98
965	Tooth Extractor	II, 427	532
966	Apparatus for Applying Freezing Mixtures to the Teeth	II, 427	532
967	Buckets of Paddle-Wheels	627	236
968	Mould-Candle Machine	500	168
969	Fastening Jewelry	II, 340	477
970	Current-Wheel	II, 131	331
971	Cooking-Stove	580	206
972	Preserving Dead Bodies	524	--------
973	Gas-Generator	507	170
974	Seed-Planter	318	47
975	Evaporator for Salts	529	178
976	Handles of Agricultural Implements	268	10
977	Water-Wheel	II, 129	328
978	Smut-Machine	II, 164	354
979	Perch-Coupling for Carriages	II, 75	294
980	Soap Mixture	529	--------
981	Washing-Machine	II, 330	470
982	Suspension Hook and Insect Insulator	II, 315	463
983	Ivory-Bleaching Apparatus	497	166
984	Stoves and Furnaces	576	204
985	Machine for Husking Corn	300	34
986	Oil-Can	536	182
987	Dumping-Wagon	II, 97	309
988	Securing Sheet-Metal Coverings for Roofs	II, 46	276
989	Washing-Machine	II, 331	473
990	Breech-Loading Fire-Arm	II, 401	518
991	Shaft-Tug	II, 93	306
992	Metallic Pen	II, 357	492
993	Back-Band Hook for Plough Harness	II, 277	443
994	Billiard-Table Cushion	II, 436	537
995	Breech-Loading Fire-Arms	II, 402	519
996	Cartridge	II, 385	--------
15,997	Railroad-Car Coupling	II, 70	291

Digitized by Google

No.	Invention or Discovery.	Text.	Plates.
15,998	Working Over Vulcanized India-Rubber	515	--------
999	Projectile for Ordnance	II, 417	525
16,000	Machinery for Operating Pawl-Cases of a Ship's Windlass.	636	242
1	Cutting Metals	395	95
2	Instrument called an Equatorial Sextant	II, 12	256
3	Odometer	II, 9	250
4	Railroad-Car Brake	II, 67	289
5	Railroad-Station Indicator	II, 92	305
6	Rocking-Chair	II, 307	460
7	Spading-Machine	343	67
8	Machines for Husking Corn	300	34
9	Automatical Musical Instrument	II, 344	483
10	Cowl or Draught-Accelerator for Steamers	543	184
11	Railroad-Car Brake	II, 67	289
12	[Cancelled]	--------	--------
13	Catch for India-Rubber Shoes	II, 286	447
14	Fishing Implement	II, 441	540
15	Loom	461	142
16	Automatic Rake for Reapers	327	53
17	Burglars'-Alarm	II, 438	538
18	Lubricator	519	176
19	Spring-Frame for Packages	II, 448	544
20	Joint for Uniting a Mortising Chisel to its Mandrel	II, 187	374
21	Trowel	II, 266	436
22	Cotton-Gin	440	129
23	Machine for Husking Corn	301	36
24	Chain-Pump	II, 120	322
25	Hay-Rake	328	52
26	Sewing-Machine	482	157
27	Starting and Stopping Water-Wheels	II, 131	329
28	Throstle Spinning-Machine	488	160
29	Weaving Long Warps	491	159
30	Sewing-Machine	482	157
31	Apparatus for Heating and Cooking by Gas	557	193
32	Stirrup for Riding-Saddles	II, 284	448
33	Machine for Sawing Marble and Stone	II, 251	424
34	Self-acting Head and Tail Blocks for Sawing-Mills	II, 204	386
35	Drain-Tile Machine	II, 265	435
36	Fabric for Underlaying Carpets	II, 303	457
37	Power Loom	467	--------
38	Shutter-Fastener	419	115
39	Crushing-Rollers for Ores, &c	403	103
40	Cider-Mill	II, 156	349
41	Tool for Tenoning, &c	II, 228	405
42	Bumper-Brake for Railroad Cars	II, 68	289
43	Anti-Frost Faucet	II, 106	313
44	Steam-Drag	II, 87	302
45	Steering Apparatus for Ships	635	241
46	Draining Machine	II, 29	262
47	Fastening Door-Knob Spindles	362	77
48	Door-Fastener	360	78
49	Diaphragm Fluid Metre	II, 115	319
50	Sleeve-Fastener	II, 432	534
51	Draining Apparatus	530	179
52	Machine for Harvesting Grain	296	30
53	Spring-Holder for Slat Blinds	II, 20	257
54	Water-Gauge for Steam Boilers	591	212
55	Regulating the Draught of House Furnaces	552	190
56	Candle-Mould Machine	501	168
57	Grain and Grass Harvester	291	28
16,058	Fork for Handling heated Plates	II, 314	463

Digitized by Google

No.	Invention or Discovery.	Text.	Plates.
16,059	Ventilating Ships, &c.	634	240
60	Wagon	II, 98	308
61	Waste-Valve for Hydrants	II, 114	317
62	Hanging Reciprocating Saws	II, 216	396
63	Preparing Ratan for Umbrellas	II, 333	535
64	Cutting Files	365	79
65	Clothes-Dryer	II, 408	462
66	Medical Respirator	II, 425	530
67	Machine for Slicing Apples	II, 294	452
68	Washing-Machine	II, 331	473
69	Cleaning India-Rubber	514	174
70	Breech-Loading Fire-Arm	II, 402	518
71	Heating Feed-Water of Locomotive Engines	604	221
72	Breech-Loading Gun	II, 413	523
73	Gas-Regulator	558	193
74	Mill-Stone Dress	II, 160	352
75	Copper-Ring Gas-Retort Fastening	509	171
76	Projectile for Fire-Arms	II, 416	525
77	Weather-Strips for Doors	II, 28	262
78	Machine for Cutting Vegetables	II, 325	469
79	Harvester	279	18
80	Machine for Paring Apples, &c.	II, 294	451
81	Excavator	II, 32	265
82	Manufacture of Iron and Steel	373	84
83	Smelting Iron Ore	371	84
84	Attaching Centre-Boards to Vessels	637	243
85	Machinery for Polishing Glass	II, 250	421
86	Machine for Sawing Marble	II, 260	431
87	Burglar-Proof Safe	415	110
88	Machine for Cleaning Grain	II, 153	347
89	Spring Latch and Lock	389	94
90	Lee-Board for Vessels	638	243
91	Propeller Shaft	628	237
92	Combined Steam Boiler and Kettle	585	209
93	Bedstead-Fastening	II, 297	454
94	Melodeon	II, 342	481
95	Stave-Jointer	II, 226	403
96	Cotton Gin	441	130
97	Binder for Grain Harvesters	292	28
98	Softening Cork by Steam	II, 440	539
99	Lubricating Car-Axle and other Journals	II, 61	286
100	Bleaching Process	498	166
101	Boring and Mortising Machine	II, 169	359
102	Tail-Piece for Violins, &c.	II, 381	508
103	Grain-Separator and Conveyer	II, 156	348
104	Machine for Paring Apples	II, 293	452
105	Governing the Parallel Yielding of Lumber-Feeding Rollers	II, 186	374
106	Tailors' Pressing-Machine	II, 433	535
107	Machine for Stuffing Horse Collars	II, 275	442
108	Lathe for Cutting Fluted Mouldings	II, 185	370
109	Printing Press	II, 373	499
110	Fourneyron Turbine Wheel	II, 132	332
111	Treating Feldspar for Manure	527	--------
112	Alcohol Cooking Apparatus	542	184
113	Boxes and Axles, Journals, &c.	II, 61	286
114	Machine for Polishing Leather and Harness	II, 277	443
115	Curry-Comb	358	74
116	Backgammon and Checker Board	II, 435	536
117	Manufacturing Cotton Yarns	494	165
118	Lathe for Planing Metal	390	99
16,119	[Cancelled.]	--------	--------

Digitized by Google

No.	Invention or Discovery.	Text.	Plates.
16,120	Stitch for Sewing Machines	487	154
121	Machine to aid in making Spokes by Hand	II, 223	401
122	Turning-Circle for Carriages	II, 78	296
123	Machine for Turning Boot-Legs	II, 268	438
124	Fire-Arm	II, 395	516
125	Travelling Trunk	II, 289	449
126	Apparatus for Hermetically Sealing Vessels	II, 302	457
127	Disk for Shelling Corn	266	8
128	"Edge-Keys" for making and Polishing the Edges of Boots and Shoe-Soles	II, 267	438
129	Gas-Cock and Swinging-Joint	507	169
130	Construction of Tubular Condensers and Heaters	592	212
131	Raking Attachment for Harvesters	293	32
132	Adjustable Cut-Off for Steam Engines	596	215
133	Apparatus for Hoisting Coal	II, 25	261
134	Finger-Bar arrangement for Harvesters	285	23
135	Hand Corn-Planter	314	49
136	Sewing Machine	483	155
137	Mop-Head	II, 317	465
138	Feeding Paper to Printing Presses	II, 374	504
139	Earthen Vessel for Hermetically Sealing Purposes	II, 266	435
140	Wristband Fastener	II, 434	535
141	Backing Electrotype Plates	II, 336	477
142	Nut-Machine	402	102
143	Oven	572	201
144	Clamping Cutters in Cutter-Heads for Planing-Machines	II, 196	378
145	Raking Apparatus for Harvesters	330	58
146	Rock-Drilling Machine	II, 249	420
147	Railroad Chair	II, 85	301
148	Pentagraph	II, 11	250
149	Drying Cylinder for Fibrous Manufactures	443	127
150	Baby Walker and Jumper	II, 295	453
151	Expanding Tap	424	119
152	Ice-Saw	II, 444	541
153	Axle-Box	II, 60	286
154	Siphon à Clapet	II, 124	325
155	Converting Rotary into Reciprocating Motion	II, 162	355
156	Self-Acting Rake for Harvesting Machines	330	58
157	Applying Steam to Wood	II, 236	410
158	Wrench	432	122
159	Railroad Car Seats and Couches	II, 72	292
160	Railroad Car Seats and Couches	II, 71	292
161	Vault-Cover	II, 56	285
162	Engine for Grinding Paper Stock	472	149
163	Bramah Planing-Wheel	II, 191	377
164	Covering Thread with Wool	489	163
165	Steering Apparatus for Ships	635	241
166	Casting Metallic Tubes	390	95
167	Automatic Hand-Stamp	II, 379	509
168	Machine for Feeding Paper to Printing Presses	II, 374	505
169	Sail-Hank	628	237
170	Alloy Composition	502	.....
171	Valve Gear for Steam Engines	610	225
172	Yielding-Joint for Portable Fences	II, 35	267
173	Float for Steam-Boilers	588	210
174	Machine for Pressing Hollow Brick	II, 237	411
175	Elliptograph	II, 6	248
176	Gas-Burner	555	191
177	Machines for Cutting the Stalks of Standing Corn	266	8
178	Valves, &c., in Siphon Rams	II, 124	325
16,179	Process for Mashing Grain	525	177

Digitized by Google

No.	Invention or Discovery.	Text.	Plates.
16,180	Pocket-Lamp	569	199
181	Prairie-Fence for Stock Pen	II, 34	267
182	Water Gauge for Steam Boilers	591	212
183	Teeth for Reaping-Machines	335	56
184	Potato-Digger	326	53
185	Planing-Machine	II, 193	381
186	Machine for Forging Iron	371	85
187	Approach-Opening Gate	II, 35	268
188	Nut-Machine	402	105
189	Preparing Tannate of Lime	526	--------
190	Washing-Machine	II, 331	473
191	Corn-Shellers	265	7
192	Lathe for Irregular Forms	II, 186	374
193	Churn	261	3
194	Harvester	279	18
195	Implement for Rolling Seeds in the Earth	339	64
196	Cleaning the Top Flats of Carding Machines	434	123
197	Cutting Carved Mouldings	II, 189	376
198	Seed-Planter	319	47
199	Machine for Sticking Pins	409	112
200	Cigars	II, 439	538
201	Machine for Husking Corn	301	37
202	Cylinder and Piston of Hydraulic and Steam Engines	594	213
203	Churn	261	3
204	Machine for Husking Corn	302	35
205	Machine for Stamping Leather	II, 280	444
206	Feed Water Pump for Steam Boilers	587	210
207	Machine for Paging Books, &c	II, 334	476
208	Mode of Incorporating Bituminous Liquids with Wet Earths for Cement	502	--------
209	Seeding Machine	339	55
210	Churn	262	4
211	Candle-Dipping Machine	498	167
212	Seed-Planter	II, 455	43
213	Connecting Tube	425	120
214	Making Cast-Steel	423	--------
215	Making Gutta Percha Cord	512	172
216	Prairie Plough	II, 455	51
217	Trap for Catching Fish, &c	II, 452	546
218	Plough	II, 455	50
219	Seeding Machine	339	55
220	Charging the Receiver of a Locomotive with Compressed Air from fixed stations	605	221
221	Printing Press	II, 373	504
222	Adjustable Cant-Hook for Moving Logs, &c	II, 140	339
223	Machine for Grinding Saws	II, 214	395
224	Case for Padlocks	382	89
225	Planing and Tapering Wooden Hoops	II, 181	369
226	Bake-Pan	II, 318	465
227	Valve-Motion for Steam Engines	613	225
228	Spring Bolt	355	75
229	Pump	II, 119	321
230	Railroad Car Coupling	II, 86	301
231	Skate-Runner	II, 449	544
232	Filtering Faucet	II, 106	313
233	Lifting-Jack	II, 142	340
234	Sewing Machine	483	158
235	Portable Water-Mill	II, 128	328
236	Portable Field-Fence	II, 33	266
237	Sewing Machine	484	161
16,238	Ship's Windlass	635	241

Digitized by Google

No.	Invention or Discovery.	Text.	Plat
16,239	Machinery for Grinding Paper Pulp	471	152
240	Machine for Paring Apples	II, 293	451
241	Boring Machine	II, 171	360
242	Photographic Bath	II, 357	492
243	Railroad-Gate for Cattle-Guard	II, 36	268
244	Harvesting Machine	298	31
245	Press for Printing Hat-Linings	II, 363	495
246	Chimney Cowl	539	183
247	Mowing and Reaping Machine	307	41
248	Machinery for Weaving Shade Cord	492	164
249	Grinding Mill	II, 157	351
250	Machine for Making Metallic Slats for Blinds	390	99
251	Reaping and Mowing Machine	334	61
252	Machinery for Wiring Blind Rods	428	120
253	Finger-Bar for Harvesting Machines	298	34
254	Securing Springs in Upholstery	II, 323	468
255	Apparatus for Coal Oil	520	176
256	Machine for Cutting and Folding Paper	II, 348	487, 488
257	Wind-Mill	II, 134	334
258	Reaping and Mowing Machine	334	54
259	Apparatus for Drying Grain in the Mass	544	185
260	Plough	324	51
261	Cider-Mill	II, 156	349
262	Steam-Boiler	585	208
263	Printing Press	II, 374	500
264	Securing Braces in the Snath of a Grain-Cradle	342	65
265	Portable Field Fence	II, 34	266
266	Machinery for Folding Paper	II, 351	490
267	Rotary Egg-Beater	II, 313	463
268	Stoves and Furnaces	577	204
269	Machine for Cutting India-Rubber Thread	514	174
270	Hand Printing-Press	II, 377	507
271	Loom	462	144
272	Spring-Hinge	370	82
273	Hoof Expander	371	82
274	Mowing Machine	306	40
275	Trimming Card-Clothing	438	129
276	Bedstead	II, 297	454
277	Plough	323	50
278	Paper-Pulp Engine	470	150
279	Hemp-Brake	453	138
280	Machine for Pointing Shoe-Pegs	II, 286	447
281	Sewing Machine	484	158
282	Door-Fastener	360	77
283	Blacksmith's Crane	II, 140	339
284	Operating Fluid Metres by hand	II, 109	314
285	Manufacture of Hosiery	454	138
286	Railroad Platform-Scales	II, 147	343
287	Hot-Air Furnace	548	187
288	Breech-Loading Fire-Arm	II, 403	519
289	Shirt	II, 431	534
290	Tinner's Shears	418	115
291	Corn-Sheller	265	8
292	Truss Pads	II, 428	532
293	Preparing Vegetable Fibres for Stuffing Mattresses	443	-------
294	Connecting Shafts with the Axletrees	II, 65	288
295	Hanging Reciprocating Gig-Saws	II, 216	396
296	Melodeon	II, 343	483
297	Knitting Machine	456	141
298	Lubricating Spindle Steps	516	174
16,299	Fountain-Pen	II, 356	490

Digitized by Google

No.	Invention or Discovery.	Text.	Plates.
16,300	Portable Head-Rest	II, 93	306
301	Machine for Trimming Bolts	356	73
302	Weighing-Scales	II, 148	344
303	Converting Reciprocating into Rotary Motion	II, 163	354
304	Burning Charcoal	502	169
305	Machinery for Sizing Hat-Bodies	450	136
306	Loom	462	147
307	Automatic Rake for Harvesters	281	21
308	Machine for Cutting Veneers from the Log	II, 231	407
309	Adjusting the Bits of Carpenters' Planes	II, 191	378
310	Spring Bed-Bottom	II, 296	453
311	Machine for Feeding Paper to Printing Presses	II, 375	507
312	Horse Fastening	II, 443	543
313	Harvesting Machine	298	34
314	Seed-Planter	319	45
315	Sewing Machine	485	152
316	Process of Grinding Paper Pulp	471	150
317	Smoke-Consuming Furnace	552	190
318	Hay-Rake	329	56
319	Manufacturing Callender Rolls	433	124
320	Refrigerator	II, 320	466
321	Sewing Machine	485	151
322	Machine for Sowing Seed Broadcast	343	67
16,323	Counting Machine	II, 4	247

ADDITIONAL IMPROVEMENTS.

No.	Invention or Discovery.	Text.	Plates.
131	Hydraulic Heater, [10,942]	499	548
132	Ornamental Felt-Cloth, [13,018]	499	548
133	Candle-Stick, [14,074]	500	548
134	Daguerreotype Case, [9,611]	500	548
135	Grinding Mill, [12,181]	500	548
136	Excavating Machine, [14,068]	500	548
137	Mash Machine, [12,205]	501	549
138	Gas-Burner, [13,130]	501	550
139	Ventilating Railroad Cars, [11,268]	501	549
140	Grain-Binder for Harvester, [14,036]	501	549
141	Grass Harvester, [11,155]	501	550
142	Faucet, [14,429]	502	550
143	Means for Holding Window-Blinds, [12,275]	502	550
144	Coupling for Carriage, [11,668]	502	550
145	Breech-Loading Fire-Arm, [11,198]	502	552
146	Bulwarks for War-Vessels, [10,174]	503	551
147	Loom, [13,724]	503	551
148	Regulating Pumps by Wind-Wheels, [14,626]	503	552
149	Gas-Heater, [12,267]	503	554
150	Apparatus for Raising and Lowering Carriage Top, [14,735]	504	554
151	Rotary Brick-Machine, [15,005]	504	--------
152	Fire-Arm, [15,521]	504	552
153	Fender for Fire-Places, [15,362]	505	552
154	Rotary Brick-Machine, [15,005]	505	553
155	Harvesting Machine, [3,803]	505	553
156	Hubs for Carriage, [14,294]	505	554
157	Breech-Loading Fire-Arm, [11,198]	505	544

Digitized by Google

Digitized by Google

Digitized by Google

3 9015 02429 8575

Digitized by Google

Digitized by Google